ASME B31.3-2014
(Revision of ASME B31.3-2012)

Process Piping

ASME Code for Pressure Piping, B31

AN INTERNATIONAL PIPING CODE®

The American Society of Mechanical Engineers

Copyright © 2015 by the American Society of Mechanical Engineers.
No reproduction may be made of this material without written consent of ASME.

ASME B31.3-2014
(Revision of ASME B31.3-2012)

Process Piping

ASME Code for Pressure Piping, B31

AN INTERNATIONAL PIPING CODE®

The American Society of Mechanical Engineers
Two Park Avenue • New York, NY • 10016 USA

Copyright © 2015 by the American Society of Mechanical Engineers.
No reproduction may be made of this material without written consent of ASME.

Date of Issuance: February 27, 2015

The next edition of this Code is scheduled for publication in 2016. This Code will become effective 6 months after the Date of Issuance.

ASME issues written replies to inquiries concerning interpretations of technical aspects of this Code. Interpretations, Code Cases, and errata are published on the ASME Web site under the Committee Pages at http://cstools.asme.org/ as they are issued. Interpretations and Code Cases are also included with each edition.

Errata to codes and standards may be posted on the ASME Web site under the Committee Pages to provide corrections to incorrectly published items, or to correct typographical or grammatical errors in codes and standards. Such errata shall be used on the date posted.

The Committee Pages can be found at http://cstools.asme.org/. There is an option available to automatically receive an e-mail notification when errata are posted to a particular code or standard. This option can be found on the appropriate Committee Page after selecting "Errata" in the "Publication Information" section.

ASME is the registered trademark of The American Society of Mechanical Engineers.

This international code or standard was developed under procedures accredited as meeting the criteria for American National Standards and it is an American National Standard. The Standards Committee that approved the code or standard was balanced to assure that individuals from competent and concerned interests have had an opportunity to participate. The proposed code or standard was made available for public review and comment that provides an opportunity for additional public input from industry, academia, regulatory agencies, and the public-at-large.

ASME does not "approve," "rate," or "endorse" any item, construction, proprietary device, or activity.

ASME does not take any position with respect to the validity of any patent rights asserted in connection with any items mentioned in this document, and does not undertake to insure anyone utilizing a standard against liability for infringement of any applicable letters patent, nor assume any such liability. Users of a code or standard are expressly advised that determination of the validity of any such patent rights, and the risk of infringement of such rights, is entirely their own responsibility.

Participation by federal agency representative(s) or person(s) affiliated with industry is not to be interpreted as government or industry endorsement of this code or standard.

ASME accepts responsibility for only those interpretations of this document issued in accordance with the established ASME procedures and policies, which precludes the issuance of interpretations by individuals.

No part of this document may be reproduced in any form,
in an electronic retrieval system or otherwise,
without the prior written permission of the publisher.

The American Society of Mechanical Engineers
Two Park Avenue, New York, NY 10016-5990

Copyright © 2015 by
THE AMERICAN SOCIETY OF MECHANICAL ENGINEERS
All rights reserved
Printed in U.S.A.

Copyright © 2015 by the American Society of Mechanical Engineers.
No reproduction may be made of this material without written consent of ASME.

CONTENTS

Foreword xii
Committee Roster xiv
Introduction xviii
Summary of Changes xx

Chapter I **Scope and Definitions** 1
300 General Statements 1

Chapter II **Design** 10
Part 1 **Conditions and Criteria** 10
301 Design Conditions 10
302 Design Criteria 12
Part 2 **Pressure Design of Piping Components** 20
303 General 20
304 Pressure Design of Components 20
Part 3 **Fluid Service Requirements for Piping Components** 30
305 Pipe 30
306 Fittings, Bends, Miters, Laps, and Branch Connections 30
307 Valves and Specialty Components 32
308 Flanges, Blanks, Flange Facings, and Gaskets 32
309 Bolting 33
Part 4 **Fluid Service Requirements for Piping Joints** 33
310 General 33
311 Welded Joints 33
312 Flanged Joints 34
313 Expanded Joints 34
314 Threaded Joints 34
315 Tubing Joints 35
316 Caulked Joints 35
317 Soldered and Brazed Joints 35
318 Special Joints 35
Part 5 **Flexibility and Support** 36
319 Piping Flexibility 36
320 Analysis of Sustained Loads 41
321 Piping Support 42
Part 6 **Systems** 44
322 Specific Piping Systems 44

Chapter III **Materials** 46
323 General Requirements 46
325 Materials — Miscellaneous 55

Chapter IV **Standards for Piping Components** 56
326 Dimensions and Ratings of Components 56

Chapter V **Fabrication, Assembly, and Erection** 60
327 General 60
328 Welding and Brazing 60
330 Preheating 67
331 Heat Treatment 69
332 Bending and Forming 74

Copyright © 2015 by the American Society of Mechanical Engineers.
No reproduction may be made of this material without written consent of ASME.

333	Brazing and Soldering	74
335	Assembly and Erection	75
Chapter VI	**Inspection, Examination, and Testing**	77
340	Inspection	77
341	Examination	77
342	Examination Personnel	84
343	Examination Procedures	84
344	Types of Examination	84
345	Testing	86
346	Records	89
Chapter VII	**Nonmetallic Piping and Piping Lined With Nonmetals**	90
A300	General Statements	90
Part 1	**Conditions and Criteria**	90
A301	Design Conditions	90
A302	Design Criteria	90
Part 2	**Pressure Design of Piping Components**	92
A303	General	92
A304	Pressure Design of Piping Components	92
Part 3	**Fluid Service Requirements for Piping Components**	93
A305	Pipe	93
A306	Fittings, Bends, Miters, Laps, and Branch Connections	93
A307	Valves and Specialty Components	94
A308	Flanges, Blanks, Flange Facings, and Gaskets	94
A309	Bolting	94
Part 4	**Fluid Service Requirements for Piping Joints**	94
A310	General	94
A311	Bonded Joints in Plastics	94
A312	Flanged Joints	95
A313	Expanded Joints	95
A314	Threaded Joints	95
A315	Tubing Joints	95
A316	Caulked Joints	95
A318	Special Joints	95
Part 5	**Flexibility and Support**	96
A319	Flexibility of Nonmetallic Piping	96
A321	Piping Support	97
Part 6	**Systems**	97
A322	Specific Piping Systems	97
Part 7	**Materials**	98
A323	General Requirements	98
A325	Materials — Miscellaneous	100
Part 8	**Standards for Piping Components**	100
A326	Dimensions and Ratings of Components	100
Part 9	**Fabrication, Assembly, and Erection**	103
A327	General	103
A328	Bonding of Plastics	103
A329	Fabrication of Piping Lined With Nonmetals	105
A332	Bending and Forming	107
A334	Joining Nonplastic Piping	107
A335	Assembly and Erection	107
Part 10	**Inspection, Examination, and Testing**	108
A340	Inspection	108
A341	Examination	108
A342	Examination Personnel	108

Copyright © 2015 by the American Society of Mechanical Engineers.
No reproduction may be made of this material without written consent of ASME.

A343	Examination Procedures	108
A344	Types of Examination	109
A345	Testing	109
A346	Records	110
Chapter VIII	**Piping for Category M Fluid Service**	111
M300	General Statements	111
Part 1	**Conditions and Criteria**	111
M301	Design Conditions	111
M302	Design Criteria	111
Part 2	**Pressure Design of Metallic Piping Components**	111
M303	General	111
M304	Pressure Design of Metallic Components	111
Part 3	**Fluid Service Requirements for Metallic Piping Components**	111
M305	Pipe	111
M306	Metallic Fittings, Bends, Miters, Laps, and Branch Connections	111
M307	Metallic Valves and Specialty Components	112
M308	Flanges, Blanks, Flange Facings, and Gaskets	112
M309	Bolting	113
Part 4	**Fluid Service Requirements for Metallic Piping Joints**	113
M310	Metallic Piping, General	113
M311	Welded Joints in Metallic Piping	113
M312	Flanged Joints in Metallic Piping	113
M313	Expanded Joints in Metallic Piping	113
M314	Threaded Joints in Metallic Piping	113
M315	Tubing Joints in Metallic Piping	113
M316	Caulked Joints	113
M317	Soldered and Brazed Joints	113
M318	Special Joints in Metallic Piping	113
Part 5	**Flexibility and Support of Metallic Piping**	113
M319	Flexibility of Metallic Piping	113
M320	Analysis of Sustained Loads	113
M321	Piping Support	113
Part 6	**Systems**	113
M322	Specific Piping Systems	113
Part 7	**Metallic Materials**	114
M323	General Requirements	114
M325	Materials — Miscellaneous	114
Part 8	**Standards for Piping Components**	114
M326	Dimensions and Ratings of Components	114
Part 9	**Fabrication, Assembly, and Erection of Metallic Piping**	114
M327	General	114
M328	Welding of Metals	114
M330	Preheating of Metals	115
M331	Heat Treatment of Metals	115
M332	Bending and Forming of Metals	115
M335	Assembly and Erection of Metallic Piping	115
Part 10	**Inspection, Examination, Testing, and Records of Metallic Piping**	115
M340	Inspection	115
M341	Examination	115
M342	Examination Personnel	115
M343	Examination Procedures	115
M344	Types of Examination	115
M345	Testing	115
M346	Records	115

Copyright © 2015 by the American Society of Mechanical Engineers.
No reproduction may be made of this material without written consent of ASME.

Parts 11 Through 20, Corresponding to Chapter VII 115
MA300 General Statements 116
Part 11 Conditions and Criteria 116
MA301 Design Conditions 116
MA302 Design Criteria 116
Part 12 Pressure Design of Nonmetallic Piping Components 116
MA303 General 116
MA304 Pressure Design of Nonmetallic Components 116
Part 13 Fluid Service Requirements for Nonmetallic Piping Components 116
MA305 Pipe 116
MA306 Nonmetallic Fittings, Bends, Miters, Laps, and Branch Connections 116
MA307 Valves and Specialty Components 116
MA308 Flanges, Blanks, Flange Facings, and Gaskets 116
MA309 Bolting 116
Part 14 Fluid Service Requirements for Nonmetallic Piping Joints 116
MA310 General 116
MA311 Bonded Joints 116
MA312 Flanged Joints 116
MA313 Expanded Joints 116
MA314 Threaded Joints 117
MA315 Tubing Joints in Nonmetallic Piping 117
MA316 Caulked Joints 117
MA318 Special Joints 117
Part 15 Flexibility and Support of Nonmetallic Piping 117
MA319 Piping Flexibility 117
MA321 Piping Support 117
Part 16 Nonmetallic and Nonmetallic Lined Systems 117
MA322 Specific Piping Systems 117
Part 17 Nonmetallic Materials 117
MA323 General Requirements 117
Part 18 Standards for Nonmetallic and Nonmetallic Lined Piping Components 117
MA326 Dimensions and Ratings of Components 117
Part 19 Fabrication, Assembly, and Erection of Nonmetallic and Nonmetallic Lined Piping 117
MA327 General 117
MA328 Bonding of Plastics 117
MA329 Fabrication of Piping Lined With Nonmetals 117
MA332 Bending and Forming 117
MA334 Joining Nonplastic Piping 117
MA335 Assembly and Erection 117
Part 20 Inspection, Examination, Testing, and Records of Nonmetallic and Nonmetallic Lined Piping 117
MA340 Inspection 117
MA341 Examination 117
MA342 Examination Personnel 118
MA343 Examination Procedures 118
MA344 Types of Examination 118
MA345 Testing 118
MA346 Records 118
Chapter IX High Pressure Piping 119
K300 General Statements 119
Part 1 Conditions and Criteria 119
K301 Design Conditions 119
K302 Design Criteria 120

Copyright © 2015 by the American Society of Mechanical Engineers.
No reproduction may be made of this material without written consent of ASME.

Part 2	**Pressure Design of Piping Components**	122
K303	General	122
K304	Pressure Design of High Pressure Components	122
Part 3	**Fluid Service Requirements for Piping Components**	126
K305	Pipe	126
K306	Fittings, Bends, and Branch Connections	126
K307	Valves and Specialty Components	127
K308	Flanges, Blanks, Flange Facings, and Gaskets	127
K309	Bolting	127
Part 4	**Fluid Service Requirements for Piping Joints**	127
K310	General	127
K311	Welded Joints	127
K312	Flanged Joints	127
K313	Expanded Joints	127
K314	Threaded Joints	127
K315	Tubing Joints	128
K316	Caulked Joints	128
K317	Soldered and Brazed Joints	128
K318	Special Joints	128
Part 5	**Flexibility and Support**	128
K319	Flexibility	128
K321	Piping Support	129
Part 6	**Systems**	129
K322	Specific Piping Systems	129
Part 7	**Materials**	129
K323	General Requirements	129
K325	Miscellaneous Materials	134
Part 8	**Standards for Piping Components**	134
K326	Requirements for Components	134
Part 9	**Fabrication, Assembly, and Erection**	134
K327	General	134
K328	Welding	134
K330	Preheating	136
K331	Heat Treatment	137
K332	Bending and Forming	138
K333	Brazing and Soldering	139
K335	Assembly and Erection	139
Part 10	**Inspection, Examination, and Testing**	139
K340	Inspection	139
K341	Examination	139
K342	Examination Personnel	141
K343	Examination Procedures	141
K344	Types of Examination	141
K345	Leak Testing	142
K346	Records	143
Chapter X	**High Purity Piping**	144
U300	General Statements	144
Part 1	**Conditions and Criteria**	144
U301	Design Conditions	144
Part 2	**Pressure Design of Piping Components**	144
Part 3	**Fluid Service Requirements for Piping Components**	144
U306	Fittings, Bends, Miters, Laps, and Branch Connections	144
U307	Valves and Specialty Components	144
U308	Flanges, Blanks, Flange Facings, and Gaskets	144

Copyright © 2015 by the American Society of Mechanical Engineers.
No reproduction may be made of this material without written consent of ASME.

Part 4	**Fluid Service Requirements for Piping Joints**	145
U311	Welded Joints	145
U314	Threaded Joints	145
U315	Tubing Joints	145
Part 5	**Flexibility and Support**	145
U319	Piping Flexibility	145
Part 6	**Systems**	145
Part 7	**Metallic Materials**	145
Part 8	**Standards for Piping Components**	146
Part 9	**Fabrication, Assembly, and Erection**	146
U327	General	146
U328	Welding	146
U330	Preheating	146
U331	Heat Treatment	146
U332	Bending and Forming	146
U333	Brazing and Soldering	146
U335	Assembly and Erection	146
Part 10	**Inspection, Examination, and Testing**	148
U340	Inspection	148
U341	Examination	148
U342	Examination Personnel	148
U343	Examination Procedures	149
U344	Types of Examination	149
U345	Testing	149
U346	Records	149
Part 11	**High Purity Piping in Category M Fluid Service**	150
UM300	General Statements	150
UM307	Metallic Valves and Specialty Components	150
UM322	Specific Piping Systems	150
UM328	Welding of Materials	150
UM335	Assembly and Erection of Metallic Piping	150
UM341	Examination	150
UM345	Testing	150

Figures

300.1.1	Diagram Illustrating Application of B31.3 Piping at Equipment	3
302.3.5	Stress Range Factor, f	17
304.2.1	Nomenclature for Pipe Bends	21
304.2.3	Nomenclature for Miter Bends	21
304.3.3	Branch Connection Nomenclature	24
304.3.4	Extruded Outlet Header Nomenclature	26
304.5.3	Blanks	29
319.4.4A	Moments in Bends	40
319.4.4B	Moments in Branch Connections	40
323.2.2A	Minimum Temperatures Without Impact Testing for Carbon Steel Materials	49
323.2.2B	Reduction in Lowest Exemption Temperature Without Impact Testing	51
328.3.2	Typical Backing Rings and Consumable Inserts	62
328.4.2	Typical Butt Weld End Preparation	62
328.4.3	Trimming and Permitted Misalignment	62
328.4.4	Preparation for Branch Connections	63
328.5.2A	Fillet Weld Size	64
328.5.2B	Typical Details for Double-Welded Slip-On and Socket Welding Flange Attachment Welds	64
328.5.2C	Minimum Welding Dimensions for Socket Welding Components Other Than Flanges	64

Copyright © 2015 by the American Society of Mechanical Engineers.
No reproduction may be made of this material without written consent of ASME.

328.5.4A Typical Welded Branch Connections 65
328.5.4B Typical Welded Branch Connections 65
328.5.4C Typical Welded Branch Connections 65
328.5.4D Acceptable Details for Branch Attachment Welds 65
328.5.4E Acceptable Details for Branch Attachment Suitable for 100% Radiography 65
328.5.4F Acceptable Details for Integrally Reinforced Branch Connections 66
328.5.5 Typical Fabricated Laps 68
335.3.3 Typical Threaded Joints Using Straight Threads 76
341.3.2 Typical Weld Imperfections 82
A328.5 Typical Plastic Piping Joints 106
K323.3.3 Example of an Acceptable Impact Test Specimen 132
K328.4.3 Pipe Bored for Alignment: Trimming and Permitted Misalignment 137
K328.5.4 Some Acceptable Welded Branch Connections Suitable for 100% Radiography 137
U304.5.3 Blanks 145
U335.7.1 Face Seal Joints 147
U335.8A Hygienic Clamp Joint Assembly 147
U335.8B Hygienic Clamp Types 148
U335.8C Hygienic Ferrules 148

Tables

300.4 Status of Appendices in B31.3 9
302.3.3C Increased Casting Quality Factors, E_c 15
302.3.3D Acceptance Levels for Castings 15
302.3.4 Longitudinal Weld Joint Quality Factor, E_j 16
302.3.5 Weld Joint Strength Reduction Factor, W 19
304.1.1 Values of Coefficient Y for $t < D/6$ 21
304.4.1 BPV Code References for Closures 28
308.2.1 Permissible Sizes/Rating Classes for Slip-On Flanges Used as Lapped Flanges 32
314.2.1 Minimum Thickness of External Threaded Components 35
323.2.2 Requirements for Low Temperature Toughness Tests for Metals 47
323.2.2A Tabular Values for Minimum Temperatures Without Impact Testing for Carbon Steel Materials 50
323.3.1 Impact Testing Requirements for Metals 52
323.3.4 Charpy Impact Test Temperature Reduction 53
323.3.5 Minimum Required Charpy V-Notch Impact Values 54
326.1 Component Standards 57
330.1.1 Preheat Temperatures 68
331.1.1 Postweld Heat Treatment 70
331.1.2 Alternate Postweld Heat Treatment Requirements for Carbon and Low Alloy Steels, P-Nos. 1 and 3 71
331.1.3 Exemptions to Mandatory Postweld Heat Treatment 72
341.3.2 Acceptance Criteria for Welds — Visual and Radiographic Examination 79
A323.2.2 Requirements for Low Temperature Toughness Tests for Nonmetals 99
A323.4.2C Recommended Temperature Limits for Reinforced Thermosetting Resin Pipe 99
A323.4.3 Recommended Temperature Limits for Thermoplastics Used as Linings 100
A326.1 Component Standards 101
A341.3.2 Acceptance Criteria for Bonds 109
K302.3.3D Acceptable Severity Levels for Steel Castings 122
K305.1.2 Required Ultrasonic or Eddy Current Examination of Pipe and Tubing for Longitudinal Defects 126
K323.3.1 Impact Testing Requirements 131

Copyright © 2015 by the American Society of Mechanical Engineers.
No reproduction may be made of this material without written consent of ASME.

K323.3.5 Minimum Required Charpy V-Notch Impact Values 133
K326.1 Component Standards 135
K341.3.2 Acceptance Criteria for Welds 140

Appendices

A Allowable Stresses and Quality Factors for Metallic Piping and Bolting Materials 151
Specification Index for Appendix A 152
Notes for Tables A-1, A-1M, A-1A, A-1B, A-2, and A-2M 155
Table A-1 Basic Allowable Stresses in Tension for Metals 159
Iron
Castings 159
Carbon Steel
Pipes and Tubes 160
Pipes (Structural Grade) 164
Plates, Bars, Shapes, and Sheets 164
Plates, Bars, Shapes, and Sheets (Structural) 166
Forgings and Fittings 166
Castings 166
Low and Intermediate Alloy Steel
Pipes 168
Plates 170
Forgings and Fittings 172
Castings 174
Stainless Steel
Pipes and Tubes 176
Plates and Sheets 182
Forgings and Fittings 184
Bar 188
Castings 188
Copper and Copper Alloy
Pipes and Tubes 190
Plates and Sheets 190
Forgings 192
Castings 192
Rod 192
Nickel and Nickel Alloy
Pipes and Tubes 194
Plates and Sheets 196
Forgings and Fittings 198
Rod and Bar 202
Castings 202
Titanium and Titanium Alloy
Pipes and Tubes 204
Plates and Sheets 204
Forgings 204
Zirconium and Zirconium Alloy
Pipes and Tubes 204
Plates and Sheets 204
Forgings and Bar 204
Aluminum Alloy
Seamless Pipes and Tubes 206
Welded Pipes and Tubes 208
Structural Tubes 208
Plates and Sheets 209
Forgings and Fittings 210
Castings 211

Copyright © 2015 by the American Society of Mechanical Engineers.
No reproduction may be made of this material without written consent of ASME.

Table A-1M Basic Allowable Stresses in Tension for Metals (Metric) 212
Fe 212
Carbon Steel 214
Low and Intermediate Alloy Steel 224
Stainless Steel 234
Copper and Copper Alloy 266
Nickel and Nickel Alloy 272
Titanium and Titanium Alloy 300
Zirconium and Zirconium Alloy 302
Aluminum Alloy 304
Table A-1A Basic Casting Quality Factors, E_c 322
Table A-1B Basic Quality Factors for Longitudinal Weld Joints in Pipes, Tubes, and Fittings, E_j 323
Table A-2 Design Stress Values for Bolting Materials 326
Table A-2M Design Stress Values for Bolting Materials (Metric) 336
B Stress Tables and Allowable Pressure Tables for Nonmetals 352
C Physical Properties of Piping Materials 358
D Flexibility and Stress Intensification Factors 372
E Reference Standards 376
F Precautionary Considerations 382
G Safeguarding 387
H Sample Calculations for Branch Reinforcement 389
J Nomenclature 398
K Allowable Stresses for High Pressure Piping 412
L Aluminum Alloy Pipe Flanges 426
M Guide to Classifying Fluid Services 429
N Application of ASME B31.3 Internationally 431
Q Quality System Program 433
S Piping System Stress Analysis Examples 434
V Allowable Variations in Elevated Temperature Service 447
X Metallic Bellows Expansion Joints 450
Z Preparation of Technical Inquiries 455
Index 457

Copyright © 2015 by the American Society of Mechanical Engineers.
No reproduction may be made of this material without written consent of ASME.

FOREWORD

Responding to evident need and at the request of The American Society of Mechanical Engineers, the American Standards Association initiated Project B31 in March 1926, with ASME as sole administrative sponsor. The breadth of the field involved required that membership of the Sectional Committee be drawn from some 40 engineering societies, industries, government bureaus, institutes, and trade associations.

Initial publication in 1935 was as the American Tentative Standard Code for Pressure Piping. Revisions from 1942 through 1955 were published as American Standard Code for Pressure Piping, ASA B31.1. It was then decided to publish as separate documents the various industry Sections, beginning with ASA B31.8-1955, Gas Transmission and Distribution Piping Systems. The first Petroleum Refinery Piping Code Section was designated ASA B31.3-1959. ASA B31.3 revisions were published in 1962 and 1966.

In 1967–1969, the American Standards Association became first the United States of America Standards Institute, then the American National Standards Institute. The Sectional Committee became American National Standards Committee B31 and the Code was renamed the American National Standard Code for Pressure Piping. The next B31.3 revision was designated ANSI B31.3-1973. Addenda were published through 1975.

A draft Code Section for Chemical Plant Piping, prepared by Section Committee B31.6, was ready for approval in 1974. It was decided, rather than have two closely related Code Sections, to merge the Section Committees and develop a joint Code Section, titled Chemical Plant and Petroleum Refinery Piping. The first edition was published as ANSI B31.3-1976.

In this Code, responsibility for piping design was conceptually integrated with that for the overall processing facility, with safeguarding recognized as an effective safety measure. Three categories of Fluid Service were identified, with a separate Chapter for Category M Fluid Service. Coverage for nonmetallic piping was introduced. New concepts were better defined in five Addenda, the fourth of which added Appendix M, a graphic aid to selection of the proper Fluid Service category.

The Standards Committee was reorganized in 1978 as a Committee operating under ASME procedures with ANSI accreditation. It is now the ASME Code for Pressure Piping, B31 Committee. Section committee structure remains essentially unchanged.

The second edition of Chemical Plant and Petroleum Refinery Piping was compiled from the 1976 Edition and its five Addenda, with nonmetal requirements editorially relocated to a separate Chapter. Its new designation was ANSI/ASME B31.3-1980.

Section Committee B31.10 had a draft Code for Cryogenic Piping ready for approval in 1981. Again, it was decided to merge the two Section Committees and develop a more inclusive Code with the same title. The work of consolidation was partially completed in the ANSI/ASME B31.3-1984 Edition.

Significant changes were made in Addenda to the 1984 Edition: integration of cryogenic requirements was completed; a new stand-alone Chapter on high-pressure piping was added; and coverage of fabrication, inspection, testing, and allowable stresses was reorganized. The new Edition was redesignated as ASME/ANSI B31.3-1987 Edition.

Addenda to the subsequent five Editions, published at three-year intervals, were primarily used to keep the Code up to date. New Appendices were added, however, on requirements for bellows expansion joints, estimating service life, submittal of Inquiries, aluminum flanges, and quality control in the 1990, 1993, 1999, and 2002 Editions, all designated as ASME B31.3.

In a program to clarify the application of all Sections of the Code for Pressure Piping, changes were made in the Introduction and Scope statements of the 1996 Edition, and its title was changed to Process Piping.

Under direction of ASME Codes and Standards management, metric units of measurement were emphasized. With certain exceptions, SI metric units were listed first in the 1996 Edition and were designated as the standard. Instructions for conversion were given where metric data

Copyright © 2015 by the American Society of Mechanical Engineers.
No reproduction may be made of this material without written consent of ASME.

were not available. U.S. Customary units also were given. By agreement, either system may have been used.

Beginning with the 2004 Edition, the publication cycle of ASME B31.3 was changed to biennial. Other changes made in the 2004 Edition included the introduction of the weld joint strength reduction factor, *W*, and the additions of new Appendix P, Alternative Rules for Evaluating Stress Range, and Appendix S, Piping System Stress Analysis Examples.

Changes that were made to the 2006 and 2008 Editions of ASME B31.3 included the requirement that valves have blowout-proof stems and the addition of a definition for elevated temperature fluid service, respectively. The most significant change that was made to the 2010 Edition of ASME B31.3 was the addition of Chapter X, High Purity Piping. In the 2012 Edition, Tables A-1M and A-2M were added to Appendix A that give allowable design values in SI metric units, and Appendix N, Application of ASME B31.3 Internationally, was also added.

In this 2014 Edition of the Code, SI metric units are given first, with U.S. Customary units in parentheses. Table K-1 in Appendix K, and Tables C-1 and C-6 in Appendix C, are exceptions, containing only U.S. Customary units. The allowable design values in Tables A-1 and A-2 in Appendix A are given in U.S. Customary units and are the required values; the SI metric values in Tables A-1M and A-2M are for information only. Except for Tables A-1M, A-2M, C-1, C-6, and K-1, values in metric units are to be regarded as the standard, unless otherwise agreed between the contracting parties. Instructions are given in those tables for converting tabular data in U.S. Customary units to appropriate SI metric units.

Interpretations, Code Cases, and errata to the B31.3 Code on Process Piping are published on the following ASME web page: *http://cstools.asme.org/csconnect/CommitteePages.cfm?Committee=N10020400.*

ASME B31.3-2014 was approved by the American National Standards Institute on July 16, 2014.

Copyright © 2015 by the American Society of Mechanical Engineers.
No reproduction may be made of this material without written consent of ASME.

ASME B31 COMMITTEE
Code for Pressure Piping

(The following is the roster of the Committee at the time of approval of this Code.)

STANDARDS COMMITTEE OFFICERS

J. E. Meyer, *Chair*
J. W. Frey, *Vice Chair*
N. Lobo, *Secretary*

STANDARDS COMMITTEE PERSONNEL

R. J. T. Appleby, ExxonMobil Development Co.
C. Becht IV, Becht Engineering Co.
A. E. Beyer, Fluor Enterprises
K. C. Bodenhamer, Willbros Professional Services, Engineering
R. Bojarczuk, ExxonMobil Research & Engineering Co.
C. J. Campbell, Air Liquide
J. S. Chin, TransCanada Pipeline U.S.
D. D. Christian, Victaulic
R. P. Deubler, Fronek Power Systems, LLC
C. Eskridge, Jacobs Engineering
D. J. Fetzner, BP Exploration Alaska, Inc.
P. D. Flenner, Flenner Engineering Services
J. W. Frey, Stress Engineering Services, Inc.
D. R. Frikken, Becht Engineering Co.
R. A. Grichuk, Fluor Enterprises, Inc.
R. W. Haupt, Pressure Piping Engineering Associates, Inc.
B. P. Holbrook, Babcock Power, Inc.
G. A. Jolly, Flowserve/Gestra, USA
N. Lobo, The American Society of Mechanical Engineers
W. J. Mauro, American Electric Power
J. E. Meyer, Louis Perry & Associates, Inc.
T. Monday, Team Industries, Inc.
G. R. Petru, Enterprise Products
E. H. Rinaca, Dominion Resources, Inc.
M. J. Rosenfeld, Kiefner/Applus — RTD
J. T. Schmitz, Southwest Gas Corp.
S. K. Sinha, Lucius Pitkin, Inc.
W. J. Sperko, Sperko Engineering Services, Inc.
J. P. Swezy, Jr., Boiler Code Tech, LLC
F. W. Tatar, FM Global
K. A. Vilminot, Black & Veatch
G. Antaki, *Ex-Officio Member,* Becht Engineering Co., Inc.
L. E. Hayden, Jr., *Ex-Officio Member*
A. J. Livingston, *Ex-Officio Member,* Kinder Morgan

B31.3 PROCESS PIPING SECTION COMMITTEE

J. E. Meyer, *Chair,* Louis Perry & Associates, Inc.
R. W. Engle, *Vice Chair,* IHI E&C International Corp.
R. Mohamed, *Secretary,* The American Society of Mechanical Engineers
B. L. Agee, GE Energy
C. Becht IV, Becht Engineering Co.
R. M. Bojarczuk, ExxonMobil Research & Engineering Co.
R. D. Campbell, Bechtel National, Inc.
D. D. Christian, Victaulic
D. L. Coym, Intertek Moody
J. A. D'Avanzo, Lockwood International
C. E. Davila, Crane Energy
D. W. Diehl, Intergraph Corp.
D. R. Edwards, ConocoPhillips Co.
J. P. Ellenberger
C. H. Eskridge, Jr., Jacobs Engineering
D. J. Fetzner, BP Exploration Alaska, Inc.
P. D. Flenner, Flenner Engineering Services
D. R. Fraser, NASA Ames Research Center
D. R. Frikken, Becht Engineering Co.
B. S. Gordon, Wyatt Field Services
O. R. Greulich, NASA
R. A. Grichuk, Fluor Enterprises, Inc.
P. J. Guerrieri, Sr., Integrated Mechanical Services, Inc.
R. W. Haupt, Pressure Piping Engineering Associates, Inc.
B. K. Henon, Magnatech, LLC
J. F. Hodgins, Car-Ber Testing Services
W. M. Huitt, W. M. Huitt Co.
D. L. Ianiro, Mainthia Technologies, Inc.
W. J. Koves, Pi Engineering Software, Inc.
R. A. McLeod, Circor Instrumentation Technologies
C. J. Melo, S&B Engineers and Constructors, Ltd.
V. B. Molina III, Air Products & Chemicals, Inc.
C. A. Moore, Smith Fibercast
A. D. Nalbandian, Thielsch Engineering, Inc.
M. Nguyen, Lockwood International
K. A. Nisly-Nagele, Archer Daniels Midland Co.
C. D. Pham, SBM Offshore, Inc.
D. W. Rahoi, CCM 2000
A. P. Rangus, Bechtel
R. K. Reamey, Turner Industries Group, LLC
G. C. Reinhardt II, Team Industries, Inc.
P. E. Robinson, Parker Hannifin Corp.
K. S. Shipley, The Equity Engineering Group, Inc.
C. Y. Shyu, ExxonMobil Development Co.
R. J. Silvia, Process Engineers & Constructors, Inc.
J. L. Smith, Jacobs Engineering
J. P. Swezy, Jr., Boiler Code Tech, LLC
F. W. Tatar, FM Global
S. J. Tonkins, BP Exploration (Alaska), Inc.
Q. N. Truong, Consultant
B. K. Walker, Consolidated Nuclear Security

Copyright © 2015 by the American Society of Mechanical Engineers.
No reproduction may be made of this material without written consent of ASME.

W. L. Weeks, Lummus Technology
J. L. Welch, T. D. Williamson, Inc.
G. E. Woods, GCS Consulting Services, Inc.
S. Biyuan, *Delegate,* PetroChina Pipeline Co.
F. Zhang, *Delegate,* SINOPEC Engineering Incorporation
G. C. Glover, *Contributing Member,* KBR
J. C. Luf, *Contributing Member,* Jacobs Engineering
J. T. Wier, *Honorary Member*

B31.3 INTERNATIONAL REVIEW GROUP

R. W. Engle, *Chair,* IHI E&C International Corp.
A. Ali, AES Arabia Ltd.
A. T. Balloch, A&S Consultants
D. W. Bikker, Du Pont de Nemours (Nederland) B.V.
G. Evans, BP Exploration
R. Gopalakrishnan, Samsung Saudi Arabia Co. Ltd.
P. Govindaraj, Dow Benelux B.V.
S. Govindaraj, Dow Chemical International Private Ltd.
M. Guidara, Engineering Procurement & Project Management S.A.
J. M. Hamedi, Santos GLNG
S. LaForge, Total France
J. K. Lambert, Welding Codes and Standards Consultant
H. W. Lange, Lisega AG
J. Langeland, Talisman Energy Norge AS
M. S. Mokhtar, SBM Offshore, Inc.
T. J. Naughton, Jacobs Engineering
A. Rokhsativand, Pars Oil & Gas Co.
W. Y. Sam, Shell Sarawak Berhad — Deepwater Engineering
C. E. Sandino, Atlaspro Engenharia
P. Shriwal, Consolidated Contractors Engineering
R. Sils, Santos Ltd.
H. Van Leengoed, Jacobs Nederland B.V.
R. Verstegen, Dow Benelux B.V.

B31.3 SUBGROUP ON DESIGN

R. M. Bojarczuk, *Chair,* ExxonMobil Research & Engineering Co.
D. L. Ianiro, *Vice Chair,* Mainthia Technologies, Inc.
D. Arnett, Fluor Enterprises, Inc.
J. P. Breen, Becht Engineering Co.
S. Butler, Shell Global Solutions
D. W. Diehl, Intergraph Corp.
D. R. Edwards, ConocoPhillips Co.
J. P. Ellenberger
R. W. Haupt, Pressure Piping Engineering Associates, Inc.
W. J. Koves, Pi Engineering Software, Inc.
E. M. Kvarda, Swagelok
R. A. Leishear, Savannah River National Laboratory
C. Nath, DuPont Engineering
K. A. Nisly-Nagele, Archer Daniels Midland Co.
C. D. Pham, SBM Offshore, Inc.
M. S. Sandacz, UOP LLC
T. C. Scrivner, ExxonMobil Engineering Europe Ltd.
K. S. Shipley, The Equity Engineering Group, Inc.
S. Stelmar, Hyspan Precision Products, Inc.
M. Stewart, URS Corp.
B. Swartz, SIG
S. B. Tewell, WFI International, Inc.
S. Tucky, CSA Group
B. K. Walker, Consolidated Nuclear Security
G. E. Woods, GCS Consulting Services, Inc.
S. LaForge, *Contributing Member,* Total France
H. W. Lange, *Contributing Member,* Lisega AG
J. C. Luf, *Contributing Member,* Jacobs Engineering
M. S. Mokhtar, *Contributing Member,* SBM Offshore, Inc.
R. P. Singh, *Contributing Member,* CB&I Lummus Private Ltd.
C. N. Trivedi, *Contributing Member,* GAIL (India) Ltd.

B31.3 SUBGROUP ON EDIT

D. J. Fetzner, *Chair,* BP Exploration Alaska, Inc.
C. Becht IV, Becht Engineering Co.
R. W. Engle, IHI E&C International Corp.
D. R. Frikken, Becht Engineering Co.
J. E. Meyer, Louis Perry & Associates, Inc.
R. J. Silvia, Process Engineers & Constructors, Inc.

B31.3 SUBGROUP ON FABRICATION, EXAMINATION, AND TESTING

C. H. Eskridge, Jr., *Chair,* Jacobs Engineering
R. D. Campbell, *Vice Chair,* Bechtel National, Inc.
D. A. Bingham, Los Alamos National Labs
K. J. Chizen, NDE Level III
A. C. Collins, JCM Industries, Inc.
M. G. Collins, ConocoPhillips
T. Dang, Chevron Energy Technology Co.
P. D. Flenner, Flenner Engineering Services
B. S. Gordon, Wyatt Field Services
J. F. Hodgins, Car-Ber Testing Services
C. Larsen, Team Industrial Services
D. H. Markman, Enerpipe Systems, Inc.
M. W. May, Chevron Energy Technology Co., USA
R. A. McLeod, Circor Instrumentation Technologies
A. D. Nalbandian, Thielsch Engineering, Inc.
R. K. Reamey, Turner Industries Group, LLC
G. C. Reinhardt II, Team Industries, Inc.
L. G. Richardson, Hi-Tech Testing Services, Inc.
R. A. Sierra, R. A. Sierra, LLC
W. J. Sperko, Sperko Engineering Services, Inc.
J. P. Swezy, Jr., Boiler Code Tech, LLC
S. W. Vail, Bechtel National, Inc.
L. S. Varone, Shaw Group
C. T. Widder, Tessenderlo Kerley Services, Inc.
K. Armstrong, *Contributing Member,* PCL Industrial Constructors, Inc.
A. T. Balloch, *Contributing Member,* A&S Consultants
J. K. Lambert, *Contributing Member,* Welding Codes and Standards Consultant
P. P. Buddhadeo, *Contributing Member,* Bechtel India Private Ltd.
A. Rokhsativand, *Contributing Member,* Pars Oil & Gas Co.
R. K. Srivastava, *Contributing Member,* Larsen & Toubro Ltd.

Copyright © 2015 by the American Society of Mechanical Engineers.
No reproduction may be made of this material without written consent of ASME.

B31.3 SUBGROUP ON GENERAL REQUIREMENTS

D. D. Christian, *Chair,* Victaulic
S. S. Cimorelli, DuPont
D. L. Coym, Intertek Moody
J. A. D'Avanzo, Lockwood International
C. E. Davila, Crane Energy
G. Evans, BP Exploration
C. J. Melo, S&B Engineers and Constructors, Ltd.
C. Y. Shyu, ExxonMobil Development Co.
G. Trinker, Victaulic Co.
J. L. Welch, T. D. Williamson, Inc.
T. D. Wills, Jr., Praxair, Inc.
A. Ali, *Contributing Member,* AES Arabia Ltd.
J. Langeland, *Contributing Member,* Talisman Energy Norge AS
R. Nanda, *Contributing Member,* Engineers India Ltd.
C. E. Sandino, *Contributing Member,* Atlaspro Engenharia
P. Shriwal, *Contributing Member,* Consolidated Contractors Engineering
H. Van Leengoed, *Contributing Member,* Jacobs Nederland B.V.

B31.3 SUBGROUP ON HIGH PRESSURE PIPING

F. W. Tatar, *Chair,* FM Global
B. T. Bounds, WorleyParsons
D. R. Fraser, NASA Ames Research Center
O. R. Greulich, NASA
M. H. Nguyen, Lockwood International
H. Tiwari, FMC Technologies, Inc.
Q. N. Truong, Consultant
M. C. Warren, Xcel Energy
W. L. Weeks, Lummus Technology
S. Govindaraj, *Contributing Member,* Dow Chemical International Private Ltd.
A. Jettley, *Contributing Member,* Bechtel India Private Ltd.

B31.3 SUBGROUP ON HIGH PURITY SYSTEMS

V. B. Molina III, *Chair,* Air Products & Chemicals, Inc.
W. F. Daprile, Eli Lilly & Co.
R. Foster, Hose Master, LLC
P. J. Guerrieri, Sr., Integrated Mechanical Services, Inc.
B. K. Henon, Magnatech, LLC
W. M. Huitt, W. M. Huitt Co.
J. M. Krance, Swagelok Co.
P. E. Robinson, Parker Hannifin Corp.
S. Garg, *Contributing Member,* Punj Lloyd Ltd.
T. J. Naughton, *Contributing Member,* Jacobs Engineering

B31.3 SUBGROUP ON MATERIALS

B. L. Agee, *Chair,* GE Energy
S. J. Tonkins, *Vice Chair,* BP Exploration (Alaska), Inc.
C. Chang, Bechtel National, Inc.
R. A. Grichuk, Fluor Enterprises, Inc.
L. K. Hovey, Fluor Corp.
T. Jacobs, Jacobs Engineering
M. Katcher, Haynes International
D. W. Rahoi, CCM 2000
A. Raza, Pi Engineering, Inc.
C. Reichert
M. Senatore, Sandvik
M. Sindelar, Lokring Technology
J. L. Smith, Jacobs Engineering
S. Tang, Swagelok Co.
A. Yasemi, Cenovus Energy, Inc.
D. W. Bikker, *Contributing Member,* Du Pont de Nemours (Nederland) B.V.
S. Biswas, *Contributing Member,* CH2M Hill
R. Goel, *Contributing Member,* CB&I
R. Gopalakrishnan, *Contributing Member,* Samsung Saudi Arabia Co. Ltd.
P. Govindaraj, *Contributing Member,* Dow Benelux B.V.
M. Guidara, *Contributing Member,* Engineering Procurement & Project Management, S.A.
W. Jianyu, *Contributing Member,* SINOPEC Shanghai Engineering Corp.
A. Kumar, *Contributing Member,* Larsen & Toubro Ltd.
R. K. Mittal, *Contributing Member,* GAIL India Ltd.
W. Y. Sam, *Contributing Member,* Shell Sarawak Berhad — Deepwater Engineering
K. Songlin, *Contributing Member,* SINOPEC Engineering, Inc.

B31.3 SUBGROUP ON NON-METALLIC PIPING

J. M. Kalnins, *Chair,* Crane ChemPharma Flow Solutions — Resistoflex
J. R. Paschal, *Vice Chair,* Paschal Engineering & Forensic Consulting, Inc.
J. Becker, ISCO Industries
M. A. Clark, Nibco, Inc.
J. D. Eisenman, Maverick Applied Science, Inc.
M. McDaniel, The Dow Chemical Co.
D. A. McGriff, ISCO Industries, LLC
T. R. McPherson, IPS Corp.
A. J. Miloser, Charlotte Pipe & Foundry Co.
C. A. Moore, Smith Fibercast
J. D. Roach, IPS Corp.
N. J. Rollins, Harrington Industrial Plastics
F. R. Volgstadt, Volgstadt & Associates, Inc.
T. Wraight, Spears Manufacturing Co.
D. Yanik, Crane ResistoFlex
R. Hariharan, *Contributing Member,* COWI
R. Muruganantham, *Contributing Member,* Larsen & Toubro Ltd.
P. Sanyal, *Contributing Member,* Bechtel India Private Ltd.
R. Sils, *Contributing Member,* Santos Ltd.

Copyright © 2015 by the American Society of Mechanical Engineers.
No reproduction may be made of this material without written consent of ASME.

B31.3 PROCESS PIPING, INDIA INTERNATIONAL WORKING GROUP

R. P. Singh, *Chair,* CB&I Lummus Private Ltd.
A. Kumar, *Vice Chair,* Larsen & Toubro Ltd.
R. Mohamed, *Secretary,* The American Society of Mechanical Engineers
S. Biswas, CH2M Hill
S. Garg, Punj Lloyd Ltd.
R. Goel, CB&I
R. Hariharan, COWI
A. Jettley, Bechtel India Private Ltd.
A. Meghani, Petroleum & Natural Gas Regulatory Board
R. K. Mittal, GAIL India Ltd.
R. Muruganantham, Larsen & Toubro Ltd.
R. Nanda, Engineers India Ltd.
P. P. Buddhadeo, Bechtel India Private Ltd.
P. Sanyal, Bechtel India Private Ltd.
C. N. Trivedi, GAIL (India) Ltd.
D. D. Christian, *Contributing Member,* Victaulic
M. Sharma, *Contributing Member,* ASME India Private Ltd.
R. K. Srivastava, *Alternate,* Larsen & Toubro Ltd.

B31 FABRICATION AND EXAMINATION COMMITTEE

J. P. Swezy, Jr., *Chair,* Boiler Code Tech, LLC
F. Huang, *Secretary,* The American Society of Mechanical Engineers
R. D. Campbell, Bechtel National, Inc.
D. Couch, Electric Power Research Institute
R. J. Ferguson, Metallurgist
P. D. Flenner, Flenner Engineering Services
S. Gingrich, URS Corp.
J. Hainsworth
A. D. Nalbandian, Thielsch Engineering, Inc.
R. J. Silvia, Process Engineers & Constructors, Inc.
W. J. Sperko, Sperko Engineering Services, Inc.
P. L. Vaughan, ONEOK Partners
K. Wu, Stellar Energy Systems

B31 MATERIALS TECHNICAL COMMITTEE

R. A. Grichuk, *Chair,* Fluor Enterprises, Inc.
N. Lobo, *Secretary,* The American Society of Mechanical Engineers
W. P. Collins, WPC Sol, LLC
R. P. Deubler, Fronek Power Systems, LLC
C. H. Eskridge, Jr., Jacobs Engineering
G. A. Jolly, Flowserve/Gestra, USA
C. J. Melo, S&B Engineers & Constructors, Ltd.
M. L. Nayyar, NICE
M. B. Pickell, Willbros Engineers, Inc.
D. W. Rahoi, CCM 2000
R. A. Schmidt, Canadoil
H. R. Simpson, Stantec
J. L. Smith, Jacobs Engineering
Z. Djilali, *Contributing Member,* Sonatrach

B31 MECHANICAL DESIGN TECHNICAL COMMITTEE

G. A. Antaki, *Chair,* Becht Engineering Co., Inc.
J. C. Minichiello, *Vice Chair,* Bechtel National, Inc.
R. Lucas, *Secretary,* The American Society of Mechanical Engineers
D. Arnett, Fluor Enterprises, Inc.
C. Becht IV, Becht Engineering Co.
R. Bethea, Huntington Ingalls Industries — Newport News Shipbuilding
J. P. Breen, Becht Engineering Co.
P. Cakir-Kavcar, Bechtel Corp. — Oil, Gas & Chemicals
N. F. Consumo, Sr., Nuclear Engineer
J. P. Ellenberger
D. J. Fetzner, BP Exploration Alaska, Inc.
D. Fraser, NASA Ames Research Center
J. A. Graziano, Consultant
R. W. Haupt, Pressure Piping Engineering Associates, Inc.
B. P. Holbrook, Babcock Power, Inc.
W. J. Koves, Pi Engineering Software, Inc.
R. A. Leishear, Savannah River National Laboratory
G. D. Mayers, Alion Science & Technology
J. F. McCabe, General Dynamics Electric Boat
T. Q. McCawley, TQM Engineering PC
J. E. Meyer, Louis Perry & Associates, Inc.
A. W. Paulin, Paulin Resource Group
R. A. Robleto, KBR
M. J. Rosenfeld, Kiefner/Applus — RTD
T. Sato, Japan Power Engineering and Inspection Corp.
G. Stevick, Berkeley Engineering and Research, Inc.
H. Kosasayama, *Delegate,* JGC Corp.
E. C. Rodabaugh, *Honorary Member,* Consultant

B31 CONFERENCE GROUP

A. Bell, Bonneville Power Administration
R. A. Coomes, Commonwealth of Kentucky, Department of Housing/Boiler Section
D. H. Hanrath
C. J. Harvey, Alabama Public Service Commission
D. T. Jagger, Ohio Department of Commerce
K. T. Lau, Alberta Boilers Safety Association
R. G. Marini, New Hampshire Public Utilities Commission
I. W. Mault, Manitoba Department of Labour
A. W. Meiring, Fire and Building Boiler and Pressure Vessel Division/Indiana
R. F. Mullaney, Boiler and Pressure Vessel Safety Branch/Vancouver
P. Sher, State of Connecticut
M. E. Skarda, Arkansas Department of Labor
D. A. Starr, Nebraska Department of Labor
D. J. Stursma, Iowa Utilities Board
R. P. Sullivan, The National Board of Boiler and Pressure Vessel Inspectors
J. E. Troppman, Division of Labor/State of Colorado Boiler Inspections
W. A. M. West, Lighthouse Assistance, Inc.
T. F. Wickham, Rhode Island Department of Labor

Copyright © 2015 by the American Society of Mechanical Engineers.
No reproduction may be made of this material without written consent of ASME.

(14)

INTRODUCTION

The ASME B31 Code for Pressure Piping consists of a number of individually published Sections, each an American National Standard, under the direction of ASME Committee B31, Code for Pressure Piping.

Rules for each Section reflect the kinds of piping installations considered during its development, as follows:

B31.1 Power Piping: piping typically found in electric power generating stations, in industrial and institutional plants, geothermal heating systems, and central and district heating and cooling systems

B31.3 Process Piping: piping typically found in petroleum refineries; chemical, pharmaceutical, textile, paper, semiconductor, and cryogenic plants; and related processing plants and terminals

B31.4 Pipeline Transportation Systems for Liquids and Slurries: piping transporting products that are predominately liquid between plants and terminals and within terminals, pumping, regulating, and metering stations

B31.5 Refrigeration Piping and Heat Transfer Components: piping for refrigerants and secondary coolants

B31.8 Gas Transmission and Distribution Piping Systems: piping transporting products that are predominately gas between sources and terminals, including compressor, regulating, and metering stations; gas gathering pipelines

B31.9 Building Services Piping: piping typically found in industrial, institutional, commercial, and public buildings, and in multi-unit residences, which does not require the range of sizes, pressures, and temperatures covered in B31.1

B31.12 Hydrogen Piping and Pipelines: piping in gaseous and liquid hydrogen service and pipelines in gaseous hydrogen service

This is the B31.3 Process Piping Code Section. Hereafter, in this Introduction and in the text of this Code Section B31.3, where the word *Code* is used without specific identification, it means this Code Section.

It is the owner's responsibility to select the Code Section that most nearly applies to a proposed piping installation. Factors to be considered by the owner include limitations of the Code Section; jurisdictional requirements; and the applicability of other codes and standards. All applicable requirements of the selected Code Section shall be met. For some installations, more than one Code Section may apply to different parts of the installation. The owner is also responsible for imposing requirements supplementary to those of the Code if necessary to assure safe piping for the proposed installation.

Certain piping within a facility may be subject to other codes and standards, including but not limited to

– ANSI Z223.1 National Fuel Gas Code: piping for fuel gas from the point of delivery to the connection of each fuel utilization device

– NFPA Fire Protection Standards: fire protection systems using water, carbon dioxide, halon, foam, dry chemicals, and wet chemicals

– NFPA 99 Health Care Facilities: medical and laboratory gas systems

– building and plumbing codes, as applicable, for potable hot and cold water, and for sewer and drain systems

The Code sets forth engineering requirements deemed necessary for safe design and construction of pressure piping. While safety is the basic consideration, this factor alone will not necessarily govern the final specifications for any piping installation. The Code is not a design handbook. The requirements of this Code generally employ a simplified approach. Many decisions that must be made to produce a sound piping installation are not described in detail by this Code. The Code does not eliminate the need for sound engineering judgments by the owner and the designer.

Copyright © 2015 by the American Society of Mechanical Engineers.
No reproduction may be made of this material without written consent of ASME.

To the greatest possible extent, Code requirements for design are stated in terms of basic design principles and formulas. These are supplemented as necessary with specific requirements to ensure uniform application of principles and to guide selection and application of piping elements. The Code prohibits designs and practices known to be unsafe and contains warnings where caution, but not prohibition, is warranted.

This Code Section includes the following:

(a) references to acceptable material specifications and component standards, including dimensional requirements and pressure–temperature ratings

(b) requirements for design of components and assemblies, including piping supports

(c) requirements and data for evaluation and limitation of stresses, reactions, and movements associated with pressure, temperature changes, and other forces

(d) guidance and limitations on the selection and application of materials, components, and joining methods

(e) requirements for the fabrication, assembly, and erection of piping

(f) requirements for examination, inspection, and testing of piping

ASME Committee B31 is organized and operates under procedures of The American Society of Mechanical Engineers that have been accredited by the American National Standards Institute. The Committee is a continuing one, and keeps all Code Sections current with new developments in materials, construction, and industrial practice. New editions are published at intervals of two years.

Code users will note that paragraphs in the Code are not necessarily numbered consecutively. Such discontinuities result from following a common outline, insofar as practical, for all Code Sections. In this way, corresponding material is correspondingly numbered in most Code Sections, thus facilitating reference by those who have occasion to use more than one Section.

It is intended that this edition of Code Section B31.3 not be retroactive. Unless agreement is specifically made between contracting parties to use another issue, or the regulatory body having jurisdiction imposes the use of another issue, the latest edition issued at least 6 months prior to the original contract date for the first phase of activity covering a piping installation shall be the governing document for all design, materials, fabrication, erection, examination, and testing for the piping until the completion of the work and initial operation.

Users of this Code are cautioned against making use of Code revisions without assurance that they are acceptable to the proper authorities in the jurisdiction where the piping is to be installed.

The B31 Committee has established an orderly procedure to consider requests for interpretation and revision of Code requirements. To receive consideration, such request must be in writing and must give full particulars in accordance with Appendix Z.

The approved reply to an inquiry will be sent directly to the inquirer. In addition, the question and reply will be published as part of an Interpretation supplement.

A Case is the prescribed form of reply when study indicates that the Code wording needs clarification, or when the reply modifies existing requirements of the Code or grants permission to use new materials or alternative constructions. The Case will be published as part of a Case supplement.

Code Cases remain available for use until annulled by the ASME B31 Standards Committee.

A request for revision of the Code will be placed on the Committee's agenda. Further information or active participation on the part of the proponent may be requested during consideration of a proposed revision.

Materials ordinarily are listed in the stress tables only when sufficient usage in piping within the scope of the Code has been shown. Requests for listing shall include evidence of satisfactory usage and specific data to permit establishment of allowable stresses, maximum and minimum temperature limits, and other restrictions. Additional criteria can be found in the guidelines for addition of new materials in the ASME Boiler and Pressure Vessel Code, Section II. (To develop usage and gain experience, unlisted materials may be used in accordance with para. 323.1.2.)

Copyright © 2015 by the American Society of Mechanical Engineers.
No reproduction may be made of this material without written consent of ASME.

ASME B31.3-2014
SUMMARY OF CHANGES

Following approval by the B31 Committee and ASME, and after public review, ASME B31.3-2014 was approved by the American National Standards Institute on July 16, 2014.

Changes given below are identified on the pages by a margin note, **(14),** placed next to the affected area.

Page	*Location*	*Change*
xviii	Introduction	Revised
1	300	Subparagraphs (b)(1) and (c)(3) revised
2–8	300.2	(1) In definition of *fluid service*, subparagraph (b) revised (2) Definitions of *heat treatment* and *weld coupon* revised (3) Definition of *integrally reinforced branch connection fitting* added
9	Table 300.4	Entry for Appendix P deleted
10	301.2.2	Subparagraph (a) revised
12–14	302.2	Revised in its entirety
	302.3.2	In subparagraphs (b) and (d), first paragraph revised
15–17	Table 302.3.3C	(1) MSS SP-93 added to General Note (2) Note (2) revised
	302.3.5	In subparagraph (d), nomenclature for S_L added
18	302.3.6	Subparagraph (a) revised
21	Table 304.1.1	Revised
24	Fig. 304.3.3	General Note revised
29	304.7.2	First paragraph revised
30	305.2.3	Revised
32	306.6	Added
36	319.1.2	Last paragraph deleted
	319.2	Revised
37	319.2.3	Subparagraph (b) revised
	319.2.4	First paragraph revised
38, 39	319.4.4	Revised
	319.5	Revised
43	321.1.4	Subparagraph (b) revised
46–48	323.2.2	Revised

Copyright © 2015 by the American Society of Mechanical Engineers.
No reproduction may be made of this material without written consent of ASME.

Page	*Location*	*Change*
	Table 323.2.2	(1) Under Type of Material, first two entries revised (2) Note (5) revised
50	Table 323.2.2A	Straddle head revised
51	Fig. 323.2.2B	Title and General Notes revised
52	Table 323.3.1	Item numbers revised
54, 55	323.4.2	Subparagraph (b) revised
57–59	Table 326.1	Revised
63–71	328.5.4	(1) Subparagraphs (b) and (c) revised (2) Subparagraph (i) added
	Fig. 328.5.4F	Added
	328.7	Added
	330	Revised in its entirety
	Table 330.1.1	Revised in its entirety
	331	Revised
	331.1	Revised in its entirety
	Table 331.1.1	Revised in its entirety
	Table 331.1.2	Added
72, 73	Table 331.1.3	Added
74	332.1	Footnote 1 added
76	335.9	Revised
77, 78	341.3.1	Subparagraph (a) revised
	341.3.2	Revised
	341.3.3	Revised
79–81	Table 341.3.2	(1) Title revised (2) Under Weld Imperfection, fourth and ninth entries revised (3) Last two columns deleted (4) Criterion Value Notes revised (5) Note (7) deleted (6) Notes (8) and (9) redesignated as (7) and (8), respectively (7) Note (9) added
83, 84	341.4.4	Subparagraph (c) revised
	342.1	Revised
85	344.3	Revised in its entirety
	344.4	Revised in its entirety
87	345.2.1	Subparagraph (a) revised
	345.2.2	Subparagraph (a) revised
88, 89	345.4.2	Revised
	345.5.4	Subparagraph (b) revised

Copyright © 2015 by the American Society of Mechanical Engineers.
No reproduction may be made of this material without written consent of ASME.

Page	*Location*	*Change*
96	A319.2.3	Revised
102	Table A326.1	Under Nonmetallic Pipes and Tubes, ASTM F423, F491, F492, F546, F599, and F781 deleted
107	A335.4.1	Revised
111	M300	Revised
	M302	Revised in its entirety
112	M306.1	Revised in its entirety
	M306.2	Revised
	M306.4.2	Revised
	M307	Revised in its entirety
	M308.3	Revised
	M308.4	Revised
113, 114	M311.2	Revised
	M320	Added
	M321	Revised
	M322	Revised in its entirety
	M323.1	Revised
	M323.1.2	Added
	M326.1.2	Revised
115	M335.10	Added
	M341.4	Subparagraph (b) revised
	M345	Revised
116	MA302.3	Revised in its entirety
	MA303	Revised
	MA305	Revised
	MA306	Revised
	MA307	Revised
	MA308	Revised
	MA309	Revised
117	MA314.1	Revised
	MA323	Revised
	MA323.1.2	Added
	MA323.4.3	Revised
	MA327	Revised
	MA332	Revised
118	MA341.1	Revised
	MA341.4	Paragraph MA341.2 redesignated as MA341.4

Copyright © 2015 by the American Society of Mechanical Engineers.
No reproduction may be made of this material without written consent of ASME.

Page	*Location*	*Change*
	MA342	Revised
	MA343	Revised
	MA345	Revised
121	K302.3.3	Subparagraph (b) revised
124	K304.7.2	First paragraph revised
125	K304.8.1	Footnote 7 revised
130	K323.2.1	Revised
	K323.2.3	Revised
	K323.2.4	Revised
136, 137	K330.1	Revised in its entirety
139	K341.3.3	Revised
140	Table K341.3.2	Second and third column heads revised
143	K345.4.2	Revised
145	U315.1	Revised
	Chapter X, Part 5	Revised in its entirety
146	U328	Revised in its entirety
	U335.8	Revised
147	Fig. U335.8A	Fig. U335.8 redesignated as Fig. U335.8A and revised
148	Fig. U335.8B	Added
	Fig. U335.8C	Added
149	U344.8	Revised in its entirety
152–154	Specification Index for Appendix A	(1) Title of ASTM A126 revised (2) ASTM A696, A813, A814, B668, and B709 added
155–157	Notes for Tables A-1, A-1M, A-1A, A-1B, A-2, and A-2M	(1) General Note (b) revised (2) General Note (d) corrected by errata to include M20 (3) General Note (e) revised (4) General Note (f) added (5) Note (1) corrected by errata to include Tables A-1M and A-2M (6) Notes (18), (23), and (42a) deleted (7) Notes (42), (48), and (65) revised (8) Note (46) redesignated as (7) and new Note (46) added (9) Note (74) revised
159	Table A-1	Under Iron, Castings, for A395, Grade added
160	Table A-1	Under Carbon Steel, Pipes and Tubes, for both API 5L A25 rows, first A53 A, and A139 A, Notes revised

Copyright © 2015 by the American Society of Mechanical Engineers.
No reproduction may be made of this material without written consent of ASME.

Page	*Location*	*Change*
162	Table A-1	For A671 CK75, A672 N75, and A691 CMS-75, Material revised for all six rows
164, 165	Table A-1	(1) Under Plates, Bars, Shapes, and Sheets, A696 B and C added (2) For both A299 rows, Grade added
172, 173	Table A-1	(1) Under Low and Intermediate Alloy Steel, Plates, for A645, Grade added
176, 177	Table A-1	(1) Under Stainless Steel, Pipes and Tubes, for the first A312 and A376 TP321 rows, stress value for 850°F revised (2) A213 TP316Ti added
180, 181	Table A-1	(1) A249 and A312 904L added (2) A813 and A814 S31254 added (3) A249 and A312 S31254 added (two rows for each) (4) A312, A358, A813, and A814 N08367 added (two rows for each) (5) A789 and A790 S32101 added (two rows for each) (6) A789 and A790 2205 added
182, 183	Table A-1	(1) A789 and A790 S32906 added (two rows for each) (2) For A789 S32750, Product Form added and stress values revised (3) For A790 2507, Product Form and Grade added, and stress values revised
184, 185	Table A-1	(1) Under Plates and Sheets, A240 904L added (2) A240 201LN added (3) Two rows for A240 S31254 added (4) Two rows for A240 N08367 added (5) Two rows for A240 S32101 added (6) A240 2205 added (7) Two rows for A240 S32906 added (8) A240 2507 added
186, 187	Table A-1	(1) Under Forgings and Fittings, A182 F904L added (2) A182 F44, A403 WPS31254, and A403 CRS31254 added (3) A182 F62, A403 WP6XN, and A403 CR6XN added (4) A815 S32101 added (5) A182 and A815 2205 added (6) A182 F53, A815 WPS32750, and A815 CRS32750 added
188, 189	Table A-1	(1) Under Bar, A479 904L added (2) A479 S31254 added (3) A479 N08367 added

Copyright © 2015 by the American Society of Mechanical Engineers.
No reproduction may be made of this material without written consent of ASME.

Page	*Location*	*Change*
		(4) A479 S32101 added (5) A479 2205 added (6) A479 S32906 added (7) A479 S32750 added
194, 195	Table A-1	(1) Under Nickel and Nickel Alloy, Pipes and Tubes, for B407 and B514 N08810, stress values for 1,550°F through 1,650°F revised (2) For B407 N08811, stress value for 1,050°F revised (3) B668 N08028 added
196, 197	Table A-1	(1) B626 N06059 added (2) B619, B622, and B626 N10362 added (3) Under Plates and Sheets, for B409 N08810 and N08811, stress values for 1,550°F through 1,650°F revised
198, 199	Table A-1	(1) B709 N08028 added (2) B575 N10362 added (3) Under Forgings and Fittings, for B366 N02201 and N02200, Condition and Size Range added (4) For B564 N02200, Notes revised
200, 201	Table A-1	(1) For B564 N08810, stress values for 1,550°F through 1,650°F revised (2) For B564 N08811, stress values for 1,100°F through 1,550°F and 1,650°F revised (3) For B366 N08810, Size added, Notes revised, and stress values for 1,550°F through 1,650°F revised (4) For B366 N08811, Size added, Notes revised, and stress values for 1,100°F through 1,550°F and 1,650°F revised (5) For B366 N04400 and N06600, Condition and Size added (6) For B366 N06030, Notes added (7) For B366 N08800, Condition revised, and Size and Notes added (8) For B366 N08020, Size and Notes added (9) For B366 N08825, Condition revised, and Size and Notes added (10) For B366 N06002, Condition and Size added, and Notes revised (11) For B366 N08031, Condition revised and Notes added (12) For B366 N10276, Notes added (13) For B366 N10001, Condition and Size added, and Notes revised (14) For B366 N06022, Condition and Size added (15) For B366 N06059, Condition revised and Notes added

Copyright © 2015 by the American Society of Mechanical Engineers.
No reproduction may be made of this material without written consent of ASME.

Page	*Location*	*Change*
		(16) For B366 N06200, Notes added (17) B366, B462, and B564 N10362 added (18) For B366 N10665, N10675, and N06230, Notes added
202, 203	Table A-1	(1) Under Rod and Bar, for B408 N08810, stress values for 1,050°F through 1,650°F revised (2) For B408 N08811, stress values for 1,550°F through 1,650°F revised (3) B574 N10362 added
211	Table A-1	Under Aluminum Alloy, Forgings and Fittings, all Notes entries revised
212	Table A-1M	For A395, Grade added
213–321	Table A-1M	(1) Straddle head revised (2) Column head for lowest metal temperature corrected by errata to read Min. Temp. to 40
214	Table A-1M	For both API 5L A25 rows, first A53 A, and A139 A, Notes revised
220, 221	Table A-1M	(1) A696 B and C added (2) For both A299 rows, Grade added
228	Table A-1M	For A645, Grade added
234–237	Table A-1M	A213 TP316Ti added
242–245	Table A-1M	A249 and A312 904L added
246–249	Table A-1M	(1) A312, A358, A813, and A814 N08367 added (two rows for each) (2) For A789 S32750, Min. Temp., Min. Yield Strength, and stress values revised (3) For A790 S32750, Grade added, and Min. Temp., Min. Yield Strength, and stress values revised
250–253	Table A-1M	(1) A240 904L added (2) A240 201LN added (3) Two rows for A240 N08367 added (4) A240 2507 added
258–261	Table A-1M	(1) A182 F904L added (2) A182 F62, A403 WP6XN, and A403 CR6XN added (3) A182 F53, A815 WPS32750, and A815 CRS32750 added
262–265	Table A-1M	(1) A479 904L added (2) A479 N08367 added (3) A479 S32750 added
266–270	Table A-1M	In eighth column head, Note (7) reference added by errata

Copyright © 2015 by the American Society of Mechanical Engineers.
No reproduction may be made of this material without written consent of ASME.

Page	*Location*	*Change*
272–275	Table A-1M	(1) For B407 and B514 N08810, stress values for 600°C, 625°C, 750°C, and 800°C through 900°C revised (2) B668 N08028 added
280–283	Table A-1M	(1) For B409 N08810, stress values for 350°C through 550°C, 600°C, 625°C, 750°C, and 800°C through 900°C revised (2) For B409 N08811, stress values for 400°C, 550°C through 650°C, 700°C, and 775°C through 900°C revised
284–287	Table A-1M	(1) B709 N08028 added (2) For B366 N02201, Condition and Size added
288–291	Table A-1M	(1) For B366 N02200, Condition and Size added (2) For B564 N02200, Notes revised (3) For three B366 rows, Condition added (4) For four B366 rows, Condition revised (5) For nine B366 rows, Size added (6) For ten B366 rows, Notes revised
292–295	Table A-1M	(1) For B366 N06022, Condition added (2) For B366 N06059, Condition revised (3) For five B366 rows, Notes revised
318, 319	Table A-1M	For all B361 rows, Notes revised
320, 321	Table A-1M	For all B361 rows, Notes revised
324	Table A-1B	(1) Under Stainless Steel, A249 added (2) For A312, last row added (3) A813 and A814 added
325	Table A-1B	(1) Under Nickel and Nickel Alloy, B668 added (2) Under Aluminum Alloy, B361 revised
326, 327	Table A-2	(1) Under Carbon Steel, for A194 2HM, Product Form revised (2) Under Alloy Steel, for A194 4, 7, and 7M, Min. Temp. revised (3) A194 4L, 7L, and 7ML added
328	Table A-2	Under Stainless Steel, for fourth group of rows, Class/Condition/Temper revised
330	Table A-2	For A193 B8M and A320 B8M, Class/Condition/Temper revised
336–339	Table A-2M	(1) For A194 2HM, Product Form revised (2) For A194 4, 7, and 7M, Min. Temp. and Max. Use Temp. revised (3) A194 4L, 7L, and 7ML added

Copyright © 2015 by the American Society of Mechanical Engineers.
No reproduction may be made of this material without written consent of ASME.

Page	*Location*	*Change*
337–349	Table A-2M	Column head for lowest metal temperature corrected by errata to read Min. Temp. to 40
358	Note for Appendix C Tables	Revised
359–361	Table C-1	Revised in its entirety
362–365	Table C-2	Added
	Table C-3	Deleted
368, 369	Table C-6	Under Ferrous Metals, first Material entry revised
372–375	Table D300	Note (1) redesignated as General Note and subsequent Notes renumbered
376–381	Appendix E	Revised
384	F323.2	Added
386	F335.9	Subparagraph (d) added
398–408	Appendix J	Revised
412	Appendix K	A694 added to Specification Index
413	Notes for Appendix K Table	(1) General Note (b) revised (2) Former Notes (2), (6), and (18) changed to General Notes (3) Notes renumbered (4) Note (9) [formerly Note (21)] revised
414–425	Table K-1	(1) Notes renumbered (2) Under Carbon Steel, Forgings and Fittings, A694 F42 through F70 added (3) For all right-hand pages, column head for lowest metal temperature corrected by errata to read Min. Temp. to 100
427, 428	L303.3	Revised in its entirety
432	Appendix P	Deleted
448, 449	V304	Revised
451	X302.1	Revised

NOTES:

(1) The interpretations to ASME B31.3 issued between April 30, 2012 and December 16, 2013 follow the last page of this edition as a separate supplement, Interpretations Volume 24.

(2) After the interpretations, a separate supplement containing Cases 180, 181, 185, 191, and 193 follows.

Copyright © 2015 by the American Society of Mechanical Engineers.
No reproduction may be made of this material without written consent of ASME.

PROCESS PIPING

Chapter I
Scope and Definitions

(14) 300 GENERAL STATEMENTS

(a) Identification. This Process Piping Code is a Section of the American Society of Mechanical Engineers Code for Pressure Piping, ASME B31, an American National Standard. It is published as a separate document for convenience of Code users.

(b) Responsibilities

(1) Owner. The owner of a piping installation shall have overall responsibility for compliance with this Code, and for establishing the requirements for design, construction, examination, inspection, and testing that will govern the entire fluid handling or process installation of which the piping is a part. The owner is also responsible for designating piping in Category D, Category M, High Pressure, and High Purity Fluid Services, and for determining if a specific Quality System is to be employed. [See paras. 300(d)(4) through (7) and Appendix Q.] Where applicable, the owner shall consider requirements imposed by the authority having jurisdiction regarding the piping installation.

(2) Designer. The designer is responsible to the owner for assurance that the engineering design of piping complies with the requirements of this Code and with any additional requirements established by the owner.

(3) Manufacturer, Fabricator, and Erector. The manufacturer, fabricator, and erector of piping are responsible for providing materials, components, and workmanship in compliance with the requirements of this Code and of the engineering design.

(4) Owner's Inspector. The owner's Inspector (see para. 340) is responsible to the owner for ensuring that the requirements of this Code for inspection, examination, and testing are met. If a Quality System is specified by the owner to be employed, the owner's Inspector is responsible for verifying that it is implemented.

(c) Intent of the Code

(1) It is the intent of this Code to set forth engineering requirements deemed necessary for safe design and construction of piping installations.

(2) This Code is not intended to apply to the operation, examination, inspection, testing, maintenance, or repair of piping that has been placed in service. The provisions of this Code may optionally be applied for those purposes, although other considerations may also be necessary.

(3) The Code generally employs a simplified approach for many of its requirements. A designer capable of applying a more complete and rigorous analysis consistent with the design criteria of this Code shall have the latitude of applying such analysis in the development of designs and fabrications. The designer shall provide details of design, construction, examination, and testing, along with calculations consistent with the design criteria of this Code. The details shall be documented in the engineering design and their validity accepted by the owner.

(4) Piping elements should, insofar as practicable, conform to the specifications and standards listed in this Code. Piping elements neither specifically approved nor specifically prohibited by this Code may be used provided they are qualified for use as set forth in applicable Chapters of this Code.

(5) The engineering design shall specify any unusual requirements for a particular service. Where service requirements necessitate measures beyond those required by this Code, such measures shall be specified by the engineering design. Where so specified, the Code requires that they be accomplished.

(6) Compatibility of materials with the service and hazards from instability of contained fluids are not within the scope of this Code. See para. F323.

(d) Determining Code Requirements

(1) Code requirements for design and construction include fluid service requirements, which affect selection and application of materials, components, and joints. Fluid service requirements include prohibitions, limitations, and conditions, such as temperature limits or a requirement for safeguarding (see Appendix G). Code requirements for a piping system are the most restrictive of those that apply to any of its elements.

(2) For metallic piping not designated by the owner as Category M, High Pressure, or High Purity Fluid

Copyright © 2015 by the American Society of Mechanical Engineers.
No reproduction may be made of this material without written consent of ASME.

Service (see para. 300.2 and Appendix M), Code requirements are found in Chapters I through VI (the base Code) and fluid service requirements are found in

(-a) Chapter III for materials

(-b) Chapter II, Part 3, for components

(-c) Chapter II, Part 4, for joints

(3) For nonmetallic piping and piping lined with nonmetals, all requirements are found in Chapter VII. Paragraph designations begin with "A."

(4) For piping in a fluid service designated as Category M, all requirements are found in Chapter VIII. Paragraph designations begin with "M."

(5) For piping in a fluid service designated as Category D, piping elements restricted to Category D Fluid Service in Chapters I through VII, as well as elements suitable for other fluid services, may be used.

(6) For piping designated as High Pressure Fluid Service, all requirements are found in Chapter IX. These rules apply only when specified by the owner. Paragraph designations begin with "K."

(7) For piping designated as High Purity Fluid Service, all requirements are found in Chapter X. Paragraph designations begin with "U."

(8) Requirements for Normal Fluid Service in Chapters I through VI are applicable under severe cyclic conditions unless alternative requirements for severe cyclic conditions are stated.

(9) Requirements for Normal Fluid Service in Chapters I through VI are applicable for Elevated Temperature Fluid Service unless alternative requirements for Elevated Temperature Fluid Service are invoked.

(e) Appendices. Appendices of this Code contain Code requirements, supplementary guidance, or other information. See para. 300.4 for a description of the status of each Appendix.

(f) Code Cases. ASME issues Code Cases that are applicable to this Code. The Code Cases

(1) modify the requirements of this Code

(2) are applicable from the issue date until the Cases are annulled

(3) may be used only when approved by the owner. When so approved, the Code Cases shall be specified in the engineering design and become requirements of this Code.

300.1 Scope

Rules for the Process Piping Code Section B31.3[1] have been developed considering piping typically found in petroleum refineries; chemical, pharmaceutical, textile, paper, semiconductor, and cryogenic plants; and related processing plants and terminals.

[1] B31 references here and elsewhere in this Code are to the ASME B31 Code for Pressure Piping and its various Sections, which are identified and briefly described in the Introduction.

300.1.1 Content and Coverage

(a) This Code prescribes requirements for materials and components, design, fabrication, assembly, erection, examination, inspection, and testing of piping.

(b) This Code applies to piping for all fluids, including

(1) raw, intermediate, and finished chemicals

(2) petroleum products

(3) gas, steam, air, and water

(4) fluidized solids

(5) refrigerants

(6) cryogenic fluids

(c) See Fig. 300.1.1 for a diagram illustrating the application of B31.3 piping at equipment. The joint connecting piping to equipment is within the scope of B31.3.

300.1.2 Packaged Equipment Piping. Also included within the scope of this Code is piping that interconnects pieces or stages within a packaged equipment assembly.

300.1.3 Exclusions. This Code excludes the following:

(a) piping systems designed for internal gage pressures at or above zero but less than 105 kPa (15 psi), provided the fluid handled is nonflammable, nontoxic, and not damaging to human tissues as defined in 300.2, and its design temperature is from −29°C (−20°F) through 186°C (366°F)

(b) power boilers in accordance with BPV Code[2] Section I and boiler external piping that is required to conform to B31.1

(c) tubes, tube headers, crossovers, and manifolds of fired heaters that are internal to the heater enclosure

(d) pressure vessels, heat exchangers, pumps, compressors, and other fluid handling or processing equipment, including internal piping and connections for external piping

300.2 Definitions (14)

Some of the terms relating to piping are defined below. For welding, brazing, and soldering terms not shown here, definitions in accordance with AWS Standard A3.0[3] apply.

air-hardened steel: a steel that hardens during cooling in air from a temperature above its transformation range.

anneal heat treatment: see *heat treatment*.

[2] BPV Code references here and elsewhere in this Code are to the ASME Boiler and Pressure Vessel Code and its various Sections as follows:

Section I, Power Boilers
Section II, Materials, Part D
Section V, Nondestructive Examination
Section VIII, Pressure Vessels, Divisions 1 and 2
Section IX, Welding, Brazing, and Fusing Qualifications

[3] AWS A3.0, Standard Welding Terms and Definitions, Including Terms for Adhesive Bonding, Brazing, Soldering, Thermal Coupling and Thermal Spraying

Copyright © 2015 by the American Society of Mechanical Engineers.
No reproduction may be made of this material without written consent of ASME.

Fig. 300.1.1 Diagram Illustrating Application of B31.3 Piping at Equipment

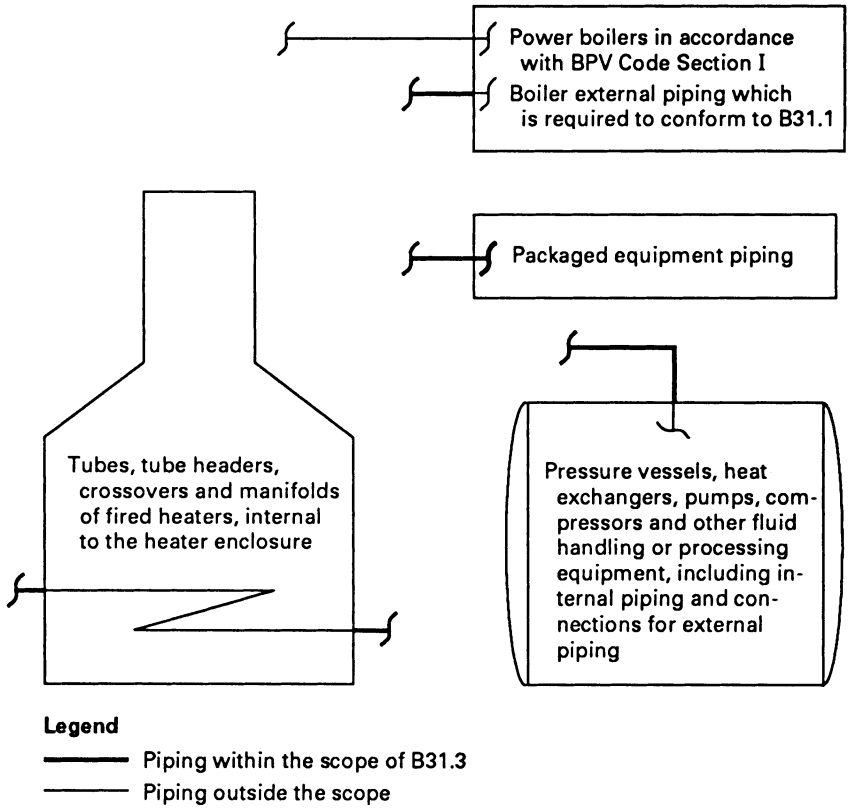

GENERAL NOTE: The means by which piping is attached to equipment is within the scope of the applicable piping code.

arc cutting: a group of cutting processes wherein the severing or removing of metals is effected by melting with the heat of an arc between an electrode and the base metal. (Includes carbon-arc cutting, metal-arc cutting, gas metal-arc cutting, gas tungsten-arc cutting, plasma-arc cutting, and air carbon-arc cutting.) See also *oxygen-arc cutting*.

arc welding (AW): a group of welding processes that produces coalescence of metals by heating them with an arc or arcs, with or without the application of pressure and with or without the use of filler metal.

assembly: the joining together of two or more piping components by bolting, welding, bonding, screwing, brazing, soldering, cementing, or use of packing devices as specified by the engineering design.

autogenous weld: a weld made by fusion of the base metal without the addition of filler metal [see also *gas tungsten-arc welding (GTAW)*].

automatic welding: welding with equipment that performs the welding operation without adjustment of the controls by an operator. The equipment may or may not perform the loading and unloading of the work.

backing filler metal: see *consumable insert*.

backing ring: material in the form of a ring used to support molten weld metal.

balanced piping system: see para. 319.2.2(a).

base material: the material to be brazed, soldered, welded, or otherwise fused.

basic allowable stress: see *stress terms frequently used*.

bolt design stress: see *stress terms frequently used*.

bonded joint: a permanent joint in nonmetallic piping made by one of the following methods:

(a) adhesive joint: a joint made by applying an adhesive to the surfaces to be joined and pressing them together

(b) butt-and-wrapped joint: a joint made by butting together the joining surfaces and wrapping the joint with plies of reinforcing fabric saturated with resin

(c) heat fusion joint: a joint made by heating the surfaces to be joined and pressing them together to achieve fusion

(d) hot gas welded joint: a joint made by simultaneously heating the surfaces to be joined and a filler material with a stream of hot air or hot inert gas, then pressing the surfaces together and applying the filler material to achieve fusion

Copyright © 2015 by the American Society of Mechanical Engineers.
No reproduction may be made of this material without written consent of ASME.

(e) solvent cemented joint: a joint made by using a solvent cement to soften the surfaces to be joined and pressing them together

(f) electrofusion joint: a joint made by heating the surfaces to be joined using an electrical resistance wire coil that remains embedded in the joint.

bonder: one who performs a manual or semiautomatic bonding operation.

bonding operator: one who operates machine or automatic bonding equipment.

bonding procedure: the detailed methods and practices involved in the production of a bonded joint.

bonding procedure specification (BPS): the document that lists the parameters to be used in the construction of bonded joints in accordance with the requirements of this Code.

borescopic examination: a visual examination aided by a mechanical or electromechanical device to examine the inside diameter of inaccessible welds.

branch connection fitting: an integrally reinforced fitting welded to a run pipe and connected to a branch pipe by a buttwelding, socket welding, threaded, or flanged joint; includes a branch outlet fitting conforming to MSS SP-97.

brazing: a metal joining process wherein coalescence is produced by use of a nonferrous filler metal having a melting point above 427°C (800°F), but lower than that of the base metals being joined. The filler metal is distributed between the closely fitted surfaces of the joint by capillary attraction.

butt joint: a joint between two members aligned approximately in the same plane.

Category D: see *fluid service*.

Category M: see *fluid service*.

caulked joint: a joint in which suitable material (or materials) is either poured or compressed by the use of tools into the annular space between a bell (or hub) and spigot (or plain end), thus comprising the joint seal.

chemical plant: an industrial plant for the manufacture or processing of chemicals, or of raw materials or intermediates for such chemicals. A chemical plant may include supporting and service facilities, such as storage, utility, and waste treatment units.

cold spring: see para. 319.2.4.

compression type tube fittings: tube fittings consisting of a flareless, mechanical grip connection, including a body, nut, and single or dual ferrules. See also para. U306.6.

connections for external piping: those integral parts of individual pieces of equipment that are designed for attachment of external piping.

consumable insert: preplaced filler metal that is completely fused into the root of the joint and becomes part of the weld.

damaging to human tissues: for the purposes of this Code, this phrase describes a fluid service in which exposure to the fluid, caused by leakage under expected operating conditions, can harm skin, eyes, or exposed mucous membranes so that irreversible damage may result unless prompt restorative measures are taken. (Restorative measures may include flushing with water, administration of antidotes, or medication.)

design minimum temperature: see para. 301.3.1.

design pressure: see para. 301.2.

design temperature: see para. 301.3.

designer: the person or organization in responsible charge of the engineering design.

displacement stress range: see para. 319.2.3.

elements: see *piping elements*.

engineering design: the detailed design governing a piping system, developed from process and mechanical requirements, conforming to Code requirements, and including all necessary specifications, drawings, and supporting documents.

equipment connection: see *connections for external piping*.

erection: the complete installation of a piping system in the locations and on the supports designated by the engineering design including any field assembly, fabrication, examination, inspection, and testing of the system as required by this Code.

examination, examiner: see paras. 341.1 and 341.2.

examination, types of: see para. 344.1.3 for the following:

(a) 100% examination
(b) random examination
(c) spot examination
(d) random spot examination

extruded outlet header: see para. 304.3.4.

fabrication: the preparation of piping for assembly, including cutting, threading, grooving, forming, bending, and joining of components into subassemblies. Fabrication may be performed in the shop or in the field.

face of weld: the exposed surface of a weld on the side from which the welding was done.

face seal fitting: a High Purity Fluid Service fitting that incorporates two machined faces and a metallic gasket within an external/internal nut configuration to attain a high leak integrity seal. See also para. U315.3(b).

filler material: the material to be added in making metallic or nonmetallic joints.

fillet weld: a weld of approximately triangular cross section joining two surfaces approximately at right angles

Copyright © 2015 by the American Society of Mechanical Engineers.
No reproduction may be made of this material without written consent of ASME.

to each other in a lap joint, tee joint, or corner joint. (See also *size of weld* and *throat of a fillet weld.*)

flammable: for the purposes of this Code, describes a fluid that under ambient or expected operating conditions is a vapor or produces vapors that can be ignited and continue to burn in air. The term thus may apply, depending on service conditions, to fluids defined for other purposes as flammable or combustible.

fluid service: a general term concerning the application of a piping system, considering the combination of fluid properties, operating conditions, and other factors that establish the basis for design of the piping system. See Appendix M.

(a) Category D Fluid Service: a fluid service in which all of the following apply:

(1) the fluid handled is nonflammable, nontoxic, and not damaging to human tissues as defined in para. 300.2

(2) the design gage pressure does not exceed 1 035 kPa (150 psi)

(3) the design temperature is not greater than 186°C (366°F)

(4) the fluid temperature caused by anything other than atmospheric conditions is not less than −29°C (−20°F)

(b) Category M Fluid Service: a fluid service in which both of the following apply:

(1) the fluid is so highly toxic that a single exposure to a very small quantity of the fluid, caused by leakage, can produce serious irreversible harm to persons on breathing or bodily contact, even when prompt restorative measures are taken

(2) after consideration of piping design, experience, service conditions, and location, the owner determines that the requirements for Normal Fluid Service do not sufficiently provide the leak tightness required to protect personnel from exposure

(c) Elevated Temperature Fluid Service: a fluid service in which the piping metal temperature is sustained equal to or greater than T_{cr} as defined in Table 302.3.5, General Note (b).

(d) High Pressure Fluid Service: a fluid service for which the owner specifies the use of Chapter IX for piping design and construction; see also para. K300.

(e) High Purity Fluid Service: a fluid service that requires alternative methods of fabrication, inspection, examination, and testing not covered elsewhere in the Code, with the intent to produce a controlled level of cleanness. The term thus applies to piping systems defined for other purposes as high purity, ultra high purity, hygienic, or aseptic.

(f) Normal Fluid Service: a fluid service pertaining to most piping covered by this Code, i.e., not subject to the rules for Category D, Category M, Elevated Temperature, High Pressure, or High Purity Fluid Service.

full fillet weld: a fillet weld whose size is equal to the thickness of the thinner member joined.

fusion: the melting together of filler material and base material, or of base material only, that results in coalescence.

gas metal-arc welding (GMAW): an arc-welding process that produces coalescence of metals by heating them with an arc between a continuous filler metal (consumable) electrode and the work. Shielding is obtained entirely from an externally supplied gas, or gas mixture. Some variations of this process are called MIG or CO_2 welding (nonpreferred terms).

gas tungsten-arc welding (GTAW): an arc-welding process that produces coalescence of metals by heating them with an arc between a single tungsten (nonconsumable) electrode and the work. Shielding is obtained from a gas or gas mixture. Pressure may or may not be used and filler metal may or may not be used. (This process has sometimes been called TIG welding.)

gas welding: a group of welding processes wherein coalescence is produced by heating with a gas flame or flames, with or without the application of pressure, and with or without the use of filler material.

groove weld: a weld made in the groove between two members to be joined.

heat affected zone: that portion of the base material which has not been melted, but whose mechanical properties or microstructure have been altered by the heat of welding, brazing, soldering, forming, or cutting.

heat treatment: the following terms describe various types and processes of heat treatment:

(a) annealing: heating to and holding at a suitable temperature above the transformation temperature range, followed by slow cooling to well below the transformation temperature range.

(b) normalizing: heating a ferrous metal to a temperature above the transformation temperature range, followed by cooling in room-temperature still air to well below the transformation temperature range.

(c) quenching: when used as a part of a heat-treating operation, a rapid cooling process that results in microstructural stabilization or changes in material properties that would not have occurred without rapid cooling.

(d) recommended or required heat treatment: the application of heat to a metal section subsequent to a cutting, forming, or welding operation, as provided in para. 331.

(e) solution heat treatment: heating an alloy to a suitable temperature, holding at that temperature long enough to allow one or more constituents to enter into solid solution, and then cooling rapidly enough to hold the constituents in solution.

(f) stress-relief: uniform heating of a structure or portion thereof to a sufficient temperature below the transformation temperature range to relieve the major

Copyright © 2015 by the American Society of Mechanical Engineers.
No reproduction may be made of this material without written consent of ASME.

portion of the residual stresses, followed by uniform cooling slowly enough to minimize development of new residual stresses.

(g) tempering: reheating a hardened metal to a temperature below the transformation range to improve toughness.

(h) transformation range: the temperature range over which a phase change occurs.

(i) transformation temperature: the temperature at which a phase change begins or ends. In metals, phase changes can be solid-state changes.

High Pressure Fluid Service: see *fluid service*.

High Purity Fluid Service: see *fluid service.*

hygienic clamp joint: a tube outside-diameter union consisting of two neutered ferrules having flat faces with a concentric groove and mating gasket that is secured with a clamp, providing a nonprotruding, recessless product contact surface. See also para. U315.3(b).

indication, linear: in magnetic particle, liquid penetrant, or similar examination, a closed surface area marking or denoting a discontinuity requiring evaluation, whose longest dimension is at least three times the width of the indication.

indication, rounded: in magnetic particle, liquid penetrant, or similar examination, a closed surface area marking or denoting a discontinuity requiring evaluation, whose longest dimension is less than three times the width of the indication.

in-process examination: see para. 344.7.

inspection, Inspector: see para. 340.

integrally reinforced branch connection fitting: see *branch connection fitting.*

joint design: the joint geometry together with the required dimensions of the welded joint.

listed: for the purposes of this Code, describes a material or component that conforms to a specification in Appendix A, Appendix B, or Appendix K or to a standard in Table 326.1, A326.1, or K326.1.

manual welding: a welding operation performed and controlled completely by hand.

may: a term that indicates a provision is neither required nor prohibited.

mechanical joint: a joint for the purpose of mechanical strength or leak resistance, or both, in which the mechanical strength is developed by threaded, grooved, rolled, flared, or flanged pipe ends; or by bolts, pins, toggles, or rings; and the leak resistance is developed by threads and compounds, gaskets, rolled ends, caulking, or machined and mated surfaces.

miter: two or more straight sections of pipe matched and joined in a plane bisecting the angle of junction so as to produce a change in direction.

nominal: a numerical identification of dimension, capacity, rating, or other characteristic used as a designation, not as an exact measurement.

Normal Fluid Service: see *fluid service*.

normalizing: see *heat treatment*.

notch-sensitive: describes a metal subject to reduction in strength in the presence of stress concentration. The degree of notch sensitivity is usually expressed as the strength determined in a notched specimen divided by the strength determined in an unnotched specimen, and can be obtained from either static or dynamic tests.

NPS: nominal pipe size (followed, when appropriate, by the specific size designation number without an inch symbol).

orbital welding: automatic or machine welding in which the electrode rotates (orbits) around the circumference of a stationary pipe or tube.

oxygen-arc cutting (OAC): an oxygen-cutting process that uses an arc between the workpiece and a consumable electrode, through which oxygen is directed to the workpiece. For oxidation-resistant metals, a chemical flux or metal powder is used to facilitate the reaction.

oxygen cutting (OC): a group of thermal cutting processes that severs or removes metal by means of the chemical reaction between oxygen and the base metal at elevated temperature. The necessary temperature is maintained by the heat from an arc, an oxyfuel gas flame, or other source.

oxygen gouging: thermal gouging that uses an oxygen cutting process variation to form a bevel or groove.

packaged equipment: an assembly of individual pieces or stages of equipment, complete with interconnecting piping and connections for external piping. The assembly may be mounted on a skid or other structure prior to delivery.

petroleum refinery: an industrial plant for processing or handling of petroleum and products derived directly from petroleum. Such a plant may be an individual gasoline recovery plant, a treating plant, a gas processing plant (including liquefaction), or an integrated refinery having various process units and attendant facilities.

pipe: a pressure-tight cylinder used to convey a fluid or to transmit a fluid pressure, ordinarily designated "pipe" in applicable material specifications. Materials designated "tube" or "tubing" in the specifications are treated as pipe when intended for pressure service. Types of pipe, according to the method of manufacture, are defined as follows:

(a) electric resistance-welded pipe: pipe produced in individual lengths or in continuous lengths from coiled skelp and subsequently cut into individual lengths, having a longitudinal butt joint wherein coalescence is produced by the heat obtained from resistance of the pipe

Copyright © 2015 by the American Society of Mechanical Engineers.
No reproduction may be made of this material without written consent of ASME.

to the flow of electric current in a circuit of which the pipe is a part, and by the application of pressure.

(b) furnace butt welded pipe, continuous welded: pipe produced in continuous lengths from coiled skelp and subsequently cut into individual lengths, having its longitudinal butt joint forge welded by the mechanical pressure developed in passing the hot-formed and edge-heated skelp through a set of round pass welding rolls.

(c) electric-fusion welded pipe: pipe having a longitudinal butt joint wherein coalescence is produced in the preformed tube by manual or automatic electric-arc welding. The weld may be single (welded from one side) or double (welded from inside and outside) and may be made with or without the addition of filler metal.

(d) double submerged-arc welded pipe: pipe having a longitudinal butt joint produced by at least two passes, one of which is on the inside of the pipe. Coalescence is produced by heating with an electric arc or arcs between the bare metal electrode or electrodes and the work. The welding is shielded by a blanket of granular fusible material on the work. Pressure is not used and filler metal for the inside and outside welds is obtained from the electrode or electrodes.

(e) seamless pipe: pipe produced by piercing a billet followed by rolling or drawing, or both.

(f) spiral (helical seam) welded pipe: pipe having a helical seam with either a butt, lap, or lock-seam joint that is welded using either an electrical resistance, electric fusion or double-submerged arc welding process.

pipe-supporting elements: pipe-supporting elements consist of fixtures and structural attachments as follows:

(a) fixtures: fixtures include elements that transfer the load from the pipe or structural attachment to the supporting structure or equipment. They include hanging type fixtures, such as hanger rods, spring hangers, sway braces, counterweights, turnbuckles, struts, chains, guides, and anchors; and bearing type fixtures, such as saddles, bases, rollers, brackets, and sliding supports.

(b) structural attachments: structural attachments include elements that are welded, bolted, or clamped to the pipe, such as clips, lugs, rings, clamps, clevises, straps, and skirts.

piping: assemblies of piping components used to convey, distribute, mix, separate, discharge, meter, control, or snub fluid flows. Piping also includes pipe-supporting elements, but does not include support structures, such as building frames, bents, foundations, or any equipment excluded from this Code (see para. 300.1.3).

piping components: mechanical elements suitable for joining or assembly into pressure-tight fluid-containing piping systems. Components include pipe, tubing, fittings, flanges, gaskets, bolting, valves, and devices such as expansion joints, flexible joints, pressure hoses, traps, strainers, inline portions of instruments, and separators.

piping elements: any material or work required to plan and install a piping system. Elements of piping include design specifications, materials, components, supports, fabrication, examination, inspection, and testing.

piping installation: designed piping systems to which a selected Code edition and addenda apply.

piping subassembly: a portion of a piping system that consists of one or more piping components.

piping system: interconnected piping subject to the same set or sets of design conditions.

plasma arc cutting (PAC): an arc cutting process that uses a constricted arc and removes molten metal with a high velocity jet of ionized gas issuing from the constricting orifice.

postweld heat treatment: see *heat treatment*.

preheating: the application of heat to the base material immediately before or during a forming, welding, or cutting process. See para. 330.

procedure qualification record (PQR): a document listing all pertinent data, including the essential variables employed and the test results, used in qualifying the procedure specification.

process unit: an area whose boundaries are designated by the engineering design within which reactions, separations, and other processes are carried out. Examples of installations that are *not* classified as process units are loading areas or terminals, bulk plants, compounding plants, and tank farms and storage yards.

quench annealing: see *solution heat treatment* under *heat treatment*.

quenching: see *heat treatment*.

reinforcement: see paras. 304.3 and A304.3. See also *weld reinforcement*.

room temperature: temperature between 10°C and 38°C (50°F and 100°F).

root opening: the separation between the members to be joined, at the root of the joint.

safeguarding: provision of protective measures of the types outlined in Appendix G, where deemed necessary. See Appendix G for detailed discussion.

seal bond: a bond intended primarily to provide joint tightness against leakage in nonmetallic piping.

seal weld: a weld intended primarily to provide joint tightness against leakage in metallic piping.

semiautomatic arc welding: arc welding with equipment that controls only the filler metal feed. The advance of the welding is manually controlled.

severe cyclic conditions: conditions applying to specific piping components or joints in which S_E computed in accordance with para. 319.4.4 exceeds $0.8S_A$ (as defined in para. 302.3.5), and the equivalent number of cycles

Copyright © 2015 by the American Society of Mechanical Engineers.
No reproduction may be made of this material without written consent of ASME.

(N in para. 302.3.5) exceeds 7000; or other conditions that the designer determines will produce an equivalent effect.

shall: a term that indicates a provision is a Code requirement.

shielded metal-arc welding (SMAW): an arc welding process that produces coalescence of metals by heating them with an arc between a covered metal electrode and the work. Shielding is obtained from decomposition of the electrode covering. Pressure is not used and filler metal is obtained from the electrode.

should: a term that indicates a provision is recommended as good practice but is not a Code requirement.

size of weld:

(a) fillet weld: the leg lengths (the leg length for equal-leg welds) of the sides, adjoining the members welded, of the largest triangle that can be inscribed within the weld cross section. For welds between perpendicular members, the definitions in Fig. 328.5.2A apply.

NOTE: When the angle between members exceeds 105 deg, size is of less significance than effective throat (see also *throat of a fillet weld*).

(b) groove weld: the joint penetration (depth of bevel plus the root penetration when specified). The size of a groove weld and its effective throat are the same.

slag inclusion: nonmetallic solid material entrapped in weld metal or between weld metal and base metal.

soldering: a metal joining process wherein coalescence is produced by heating to suitable temperatures and by using a nonferrous alloy fusible at temperatures below 427°C (800°F) and having a melting point below that of the base metals being joined. The filler metal is distributed between closely fitted surfaces of the joint by capillary attraction. In general, solders are lead-tin alloys and may contain antimony, bismuth, and other elements.

solution heat treatment: see *heat treatment*.

stress ratio: see Fig. 323.2.2B.

stress relief: see *heat treatment*.

stress terms frequently used:

(a) basic allowable stress: this term, symbol S, represents the stress value for any material determined by the appropriate stress basis in para. 302.3.2

(b) bolt design stress: this term represents the design stress used to determine the required cross-sectional area of bolts in a bolted joint

(c) hydrostatic design basis: selected properties of plastic piping materials to be used in accordance with ASTM D2837 or D2992 to determine the HDS [see (d) below] for the material

(d) hydrostatic design stress (HDS): the maximum continuous stress due to internal pressure to be used in the design of plastic piping, determined from the hydrostatic design basis by use of a service (design) factor

submerged arc welding (SAW): an arc welding process that produces coalescence of metals by heating them with an arc or arcs between a bare metal electrode or electrodes and the work. The arc is shielded by a blanket of granular, fusible material on the work. Pressure is not used and filler metal is obtained from the electrode and sometimes from a supplemental source (welding rod, flux, or metal granules).

tack weld: a weld made to hold parts of a weldment in proper alignment until the final welds are made.

tempering: see *heat treatment*.

thermoplastic: a plastic that is capable of being repeatedly softened by increase of temperature and hardened by decrease of temperature.

thermosetting resin: a resin capable of being changed into a substantially infusible or insoluble product when cured at room temperature, or by application of heat, or by chemical means.

throat of a fillet weld:

(a) theoretical throat: the perpendicular distance from the hypotenuse of the largest right triangle that can be inscribed in the weld cross section to the root of the joint

(b) actual throat: the shortest distance from the root of a fillet weld to its face

(c) effective throat: the minimum distance, minus any reinforcement (convexity), between the weld root and the face of a fillet weld

toe of weld: the junction between the face of a weld and the base material.

tube: see *pipe*.

tungsten electrode: a nonfiller-metal electrode used in arc welding or cutting, made principally of tungsten.

unbalanced piping system: see para. 319.2.2(b).

undercut: a groove melted into the base material adjacent to the toe or root of a weld and left unfilled by weld material.

visual examination: see para. 344.2.1.

weld: a localized coalescence of material wherein coalescence is produced either by heating to suitable temperatures, with or without the application of pressure, or by application of pressure alone, and with or without the use of filler material.

weld coupon: a sample weld used to determine weld acceptance. Types of weld coupons are defined as follows:

(a) primary weld coupon: made prior to the start of production welding to establish a benchmark of weld acceptance

(b) production weld coupon: made when any of the conditions in para. U341.4.5 exist and used to compare against a corresponding primary weld coupon to demonstrate continued acceptability of welds during production welding

Copyright © 2015 by the American Society of Mechanical Engineers.
No reproduction may be made of this material without written consent of ASME.

Table 300.4 Status of Appendices in B31.3 (14)

Appendix	Title	Status
A	Allowable Stresses and Quality Factors for Metallic Piping and Bolting Materials	Requirements
B	Stress Tables and Allowable Pressure Tables for Nonmetals	Requirements
C	Physical Properties of Piping Materials	Requirements (1)
D	Flexibility and Stress Intensification Factors	Requirements (1)
E	Reference Standards	Requirements
F	Precautionary Considerations	Guidance (2)
G	Safeguarding	Guidance (2)
H	Sample Calculations for Branch Reinforcement	Guidance
J	Nomenclature	Information
K	Allowable Stresses for High Pressure Piping	Requirements (3)
L	Aluminum Alloy Pipe Flanges	Specification (4)
M	Guide to Classifying Fluid Services	Guidance (2)
N	Application of ASME B31.3 Internationally	Guidance (2)
Q	Quality System Program	Guidance (2)
S	Piping System Stress Analysis Examples	Guidance (2)
V	Allowable Variations in Elevated Temperature Service	Guidance (2)
X	Metallic Bellows Expansion Joints	Requirements
Z	Preparation of Technical Inquiries	Requirements (5)

NOTES:
(1) Contains default requirements, to be used unless more directly applicable data are available.
(2) Contains no requirements but Code user is responsible for considering applicable items.
(3) Contains requirements applicable only when use of Chapter IX is specified.
(4) Contains pressure-temperature ratings, materials, dimensions, and markings of forged aluminum alloy flanges.
(5) Contains administrative requirements.

weld coupon examination: see para. U344.8.1.

weld reinforcement: weld material in excess of the specified weld size.

welder: one who performs a manual or semi-automatic welding operation. (This term is sometimes erroneously used to denote a welding machine.)

welding operator: one who operates machine or automatic welding equipment.

welding procedure: the detailed methods and practices involved in the production of a weldment.

welding procedure specification (WPS): the document that lists the parameters to be used in construction of weldments in accordance with requirements of this Code.

weldment: an assembly whose component parts are joined by welding.

300.3 Nomenclature

Dimensional and mathematical symbols used in this Code are listed in Appendix J, with definitions and location references to each. Uppercase and lowercase English letters are listed alphabetically, followed by Greek letters.

300.4 Status of Appendices

Table 300.4 indicates for each Appendix of this Code whether it contains Code requirements, guidance, or supplemental information. See the first page of each Appendix for details.

Copyright © 2015 by the American Society of Mechanical Engineers.
No reproduction may be made of this material without written consent of ASME.

Chapter II
Design

PART 1
CONDITIONS AND CRITERIA

301 DESIGN CONDITIONS

Paragraph 301 states the qualifications of the Designer, defines the temperatures, pressures, and forces applicable to the design of piping, and states the consideration that shall be given to various effects and their consequent loadings. See also Appendix F, para. F301.

301.1 Qualifications of the Designer

The Designer is the person(s) in charge of the engineering design of a piping system and shall be experienced in the use of this Code. The qualifications and experience required of the Designer will depend on the complexity and criticality of the system and the nature of the individual's experience. The owner's approval is required if the individual does not meet at least one of the following criteria:

(a) Completion of a degree, accredited by an independent agency [such as ABET (U.S. and international), NBA (India), CTI (France), and CNAP (Chile)], in engineering, science, or technology, requiring the equivalent of at least 4 years of full-time study that provides exposure to fundamental subject matter relevant to the design of piping systems, plus a minimum of 5 years experience in the design of related pressure piping.

(b) Professional Engineering registration, recognized by the local jurisdiction, and experience in the design of related pressure piping.

(c) Completion of an accredited engineering technician or associates degree, requiring the equivalent of at least 2 years of study, plus a minimum of 10 years experience in the design of related pressure piping.

(d) Fifteen years experience in the design of related pressure piping.

Experience in the design of related pressure piping is satisfied by piping design experience that includes design calculations for pressure, sustained and occasional loads, and piping flexibility.

301.2 Design Pressure

301.2.1 General

(a) The design pressure of each component in a piping system shall be not less than the pressure at the most severe condition of coincident internal or external pressure and temperature (minimum or maximum) expected during service, except as provided in para. 302.2.4.

(b) The most severe condition is that which results in the greatest required component thickness and the highest component rating.

(c) When more than one set of pressure–temperature conditions exist for a piping system, the conditions governing the rating of components conforming to listed standards may differ from the conditions governing the rating of components designed in accordance with para. 304.

(d) When a pipe is separated into individualized pressure-containing chambers (including jacketed piping, blanks, etc.), the partition wall shall be designed on the basis of the most severe coincident temperature (minimum or maximum) and differential pressure between the adjoining chambers expected during service, except as provided in para. 302.2.4.

301.2.2 Required Pressure Containment or Relief (14)

(a) Provision shall be made to safely contain or relieve (see para. 322.6.3) any expected pressure to which the piping may be subjected. Piping not protected by a pressure-relieving device, or that can be isolated from a pressure-relieving device, shall be designed for at least the highest expected pressure.

(b) Sources of pressure to be considered include ambient influences, pressure oscillations and surges, improper operation, decomposition of unstable fluids, static head, and failure of control devices.

(c) The allowances of para. 302.2.4(f) are permitted, provided that the other requirements of para. 302.2.4 are also met.

301.3 Design Temperature

The design temperature of each component in a piping system is the temperature at which, under the coincident pressure, the greatest thickness or highest component rating is required in accordance with para. 301.2. (To satisfy the requirements of para. 301.2, different components in the same piping system may have different design temperatures.)

In establishing design temperatures, consider at least the fluid temperatures, ambient temperatures, solar radiation, heating or cooling medium temperatures, and the applicable provisions of paras. 301.3.2, 301.3.3, and 301.3.4.

301.3.1 Design Minimum Temperature. The design minimum temperature is the lowest component temperature expected in service. This temperature may establish special design requirements and material

Copyright © 2015 by the American Society of Mechanical Engineers.
No reproduction may be made of this material without written consent of ASME.

qualification requirements. See also paras. 301.4.4 and 323.2.2.

301.3.2 Uninsulated Components

(a) For fluid temperatures below 65°C (150°F), the component temperature shall be taken as the fluid temperature unless solar radiation or other effects result in a higher temperature.

(b) For fluid temperatures 65°C (150°F) and above, unless a lower average wall temperature is determined by test or heat transfer calculation, the temperature for uninsulated components shall be no less than the following values:

(1) valves, pipe, lapped ends, welding fittings, and other components having wall thickness comparable to that of the pipe — 95% of the fluid temperature

(2) flanges (except lap joint) including those on fittings and valves — 90% of the fluid temperature

(3) lap joint flanges — 85% of the fluid temperature

(4) bolting — 80% of the fluid temperature

301.3.3 Externally Insulated Piping. The component design temperature shall be the fluid temperature unless calculations, tests, or service experience based on measurements support the use of another temperature. Where piping is heated or cooled by tracing or jacketing, this effect shall be considered in establishing component design temperatures.

301.3.4 Internally Insulated Piping. The component design temperature shall be based on heat transfer calculations or tests.

301.4 Ambient Effects

See Appendix F, para. F301.4.

301.4.1 Cooling — Effects on Pressure. The cooling of a gas or vapor in a piping system may reduce the pressure sufficiently to create an internal vacuum. In such a case, the piping shall be capable of withstanding the external pressure at the lower temperature, or provision shall be made to break the vacuum.

301.4.2 Fluid Expansion Effects. Provision shall be made in the design either to withstand or to relieve increased pressure caused by the heating of static fluid in a piping component. See also para. 322.6.3(b)(2).

301.4.3 Atmospheric Icing. Where the design minimum temperature of a piping system is below 0°C (32°F), the possibility of moisture condensation and buildup of ice shall be considered and provisions made in the design to avoid resultant malfunctions. This applies to surfaces of moving parts of shutoff valves, control valves, pressure-relief devices including discharge piping, and other components.

301.4.4 Low Ambient Temperature. Consideration shall be given to low ambient temperature conditions for displacement stress analysis.

301.5 Dynamic Effects

See Appendix F, para. F301.5.

301.5.1 Impact. Impact forces caused by external or internal conditions (including changes in flow rate, hydraulic shock, liquid or solid slugging, flashing, and geysering) shall be taken into account in the design of piping.

301.5.2 Wind. The effect of wind loading shall be taken into account in the design of exposed piping. The analysis considerations and loads may be as described in ASCE 7. Authoritative local meteorological data may also be used to define or refine the design wind loads.

301.5.3 Earthquake. The effect of earthquake loading shall be taken into account in the design of piping. The analysis considerations and loads may be as described in ASCE 7. Authoritative local seismological data may also be used to define or refine the design earthquake loads.

301.5.4 Vibration. Piping shall be designed, arranged, and supported so as to eliminate excessive and harmful effects of vibration that may arise from such sources as impact, pressure pulsation, turbulent flow vortices, resonance in compressors, and wind.

301.5.5 Discharge Reactions. Piping shall be designed, arranged, and supported so as to withstand reaction forces due to let-down or discharge of fluids.

301.6 Weight Effects

The following weight effects, combined with loads and forces from other causes, shall be taken into account in the design of piping.

301.6.1 Live Loads. These loads include the weight of the medium transported or the medium used for test. Snow and ice loads due to both environmental and operating conditions shall be considered.

301.6.2 Dead Loads. These loads consist of the weight of piping components, insulation, and other superimposed permanent loads supported by the piping.

301.7 Thermal Expansion and Contraction Effects

The following thermal effects, combined with loads and forces from other causes, shall be taken into account in the design of piping. See also Appendix F, para. F301.7.

301.7.1 Thermal Loads Due to Restraints. These loads consist of thrusts and moments that arise when free thermal expansion and contraction of the piping are prevented by restraints or anchors.

301.7.2 Loads Due to Temperature Gradients. These loads arise from stresses in pipe walls resulting from

Copyright © 2015 by the American Society of Mechanical Engineers.
No reproduction may be made of this material without written consent of ASME.

large rapid temperature changes or from unequal temperature distribution as may result from a high heat flux through a comparatively thick pipe or stratified two-phase flow causing bowing of the line.

301.7.3 Loads Due to Differences in Expansion Characteristics. These loads result from differences in thermal expansion where materials with different thermal expansion coefficients are combined, as in bimetallic, lined, jacketed, or metallic–nonmetallic piping.

301.8 Effects of Support, Anchor, and Terminal Movements

The effects of movements of piping supports, anchors, and connected equipment shall be taken into account in the design of piping. These movements may result from the flexibility and/or thermal expansion of equipment, supports, or anchors; and from settlement, tidal movements, or wind sway.

301.9 Reduced Ductility Effects

The harmful effects of reduced ductility shall be taken into account in the design of piping. The effects may, for example, result from welding, heat treatment, forming, bending, or low operating temperatures, including the chilling effect of sudden loss of pressure on highly volatile fluids. Low ambient temperatures expected during operation shall be considered.

301.10 Cyclic Effects

Fatigue due to pressure cycling, thermal cycling, and other cyclic loadings shall be considered in the design of piping. See Appendix F, para. F301.10.

301.11 Air Condensation Effects

At operating temperatures below −191°C (−312°F) in ambient air, condensation and oxygen enrichment occur. These shall be considered in selecting materials, including insulation, and adequate shielding and/or disposal shall be provided.

302 DESIGN CRITERIA

302.1 General

Paragraph 302 states pressure–temperature ratings, stress criteria, design allowances, and minimum design values together with permissible variations of these factors as applied to the design of piping.

(14) 302.2 Pressure–Temperature Design Criteria

302.2.1 Listed Components Having Established Ratings. Except as limited elsewhere in the Code, pressure–temperature ratings contained in standards for piping components listed in Table 326.1 are acceptable for design pressures and temperatures in accordance with this Code. When the owner approves, provisions of this Code may be used to extend the pressure–temperature ratings of a component beyond the ratings contained in the listed standard.

302.2.2 Listed Components Not Having Specific Ratings

(a) Some of the standards for fittings in Table 326.1 (e.g., ASME B16.9 and B16.11) state that pressure–temperature ratings are based on straight seamless pipe. Except as limited in the standard or elsewhere in this Code, such fittings shall be rated as calculated for straight seamless pipe with the same allowable stresses as the fitting and the nominal thickness corresponding to the wall thickness or class designation of the fitting, less all applicable allowances (e.g., thread depth and corrosion allowance), and considering the manufacturing undertolerances of the fittings and the pipe.

(b) For components with straight or spiral (helical seam) longitudinal welded joints, the pressure rating as determined for seamless pipe shall be further multiplied by the weld joint strength reduction factor, W, as defined in para. 302.3.5(e).

(c) Other listed components not addressed in para. 302.2.1 or 302.2.2(a) shall have their pressure–temperature ratings established in accordance with the rules in para. 304.

302.2.3 Unlisted Components. Components not listed in Table 326.1 may be used within the following limitations:

(a) The designer shall be satisfied that composition, mechanical properties, method of manufacture, and design are suitable for the intended service.

(b) Pressure–temperature ratings shall be established in accordance with the rules in para. 304.

302.2.4 Allowances for Pressure and Temperature Variations. Occasional variations of pressure and/or temperature may occur in a piping system. Such variations shall be considered in selecting design pressure (para. 301.2) and design temperature (para. 301.3). The most severe coincident pressure and temperature shall determine the design conditions unless all of the following criteria are met:

(a) The piping system shall have no pressure-containing components of gray iron or other nonductile metal.

(b) Circumferential pressure stresses (based on minimum pipe wall thickness, less allowances) shall not exceed the yield strength at temperature (see para. 302.3 of this Code and S_y data in BPV Code, Section II, Part D, Table Y-1).

(c) Combined longitudinal stresses shall not exceed the limits established in para. 302.3.6.

(d) The total number of pressure–temperature variations above the design conditions shall not exceed 1 000 during the life of the piping system.

Copyright © 2015 by the American Society of Mechanical Engineers.
No reproduction may be made of this material without written consent of ASME.

(e) In no case shall the increased pressure exceed the test pressure used under para. 345 for the piping system.

(f) Occasional variations above design conditions shall remain within one of the following limits for pressure design.

(1) Subject to the owner's approval, it is permissible to exceed the pressure rating or the allowable stress for pressure design at the temperature of the increased condition by not more than

(-a) 33% for no more than 10 h at any one time and no more than 100 h/y, or

(-b) 20% for no more than 50 h at any one time and no more than 500 h/y

The effects of such variations shall be determined by the designer to be safe over the service life of the piping system by methods acceptable to the owner. (See Appendix V.)

(2) When the variation is self-limiting (e.g., due to a pressure-relieving event), and lasts no more than 50 h at any one time and not more than 500 h/y, it is permissible to exceed the pressure rating or the allowable stress for pressure design at the temperature of the increased condition by not more than 20%.

(g) The combined effects of the sustained and cyclic variations on the serviceability of all components in the system shall have been evaluated.

(h) Temperature variations below the minimum temperature shown in Appendix A are not permitted unless the requirements of para. 323.2.2 are met for the lowest temperature during the variation.

(i) The application of pressures exceeding pressure–temperature ratings of valves may under certain conditions cause loss of seat tightness or difficulty of operation. The differential pressure on the valve closure element should not exceed the maximum differential pressure rating established by the valve manufacturer. Such applications are the owner's responsibility.

302.2.5 Ratings at Junction of Different Services. When two services that operate at different pressure–temperature conditions are connected, the valve segregating the two services shall be rated for the more severe service condition. Where multiple valves are used (e.g., in a double block and bleed arrangement), all of the valves shall be rated for the more severe service condition. If the valve(s) will operate at a different temperature due to remoteness from a header or piece of equipment, the valve(s) (and any mating flanges) may be selected on the basis of the different temperature. For piping on either side of the valve, however, each system shall be designed for the conditions of the service to which it is connected.

302.3 Allowable Stresses and Other Stress Limits

302.3.1 General. The allowable stresses defined in paras. 302.3.1(a), (b), and (c) shall be used in design calculations unless modified by other provisions of this Code.

(a) Tension. Basic allowable stresses S in tension for metals and design stresses S for bolting materials, listed in Tables A-1 and A-2, respectively, are determined in accordance with para. 302.3.2.

In equations elsewhere in the Code where the product SE appears, the value S is multiplied by one of the following quality factors:[1]

(1) casting quality factor E_c as defined in para. 302.3.3 and tabulated for various material specifications in Table A-1A, and for various levels of supplementary examination in Table 302.3.3C, or

(2) longitudinal weld joint factor E_j as defined in 302.3.4 and tabulated for various material specifications and classes in Table A-1B, and for various types of joints and supplementary examinations in Table 302.3.4

The stress values in Tables A-1 and A-2 are grouped by materials and product forms, and are for stated temperatures up to the limit provided in para. 323.2.1(a). Straight line interpolation between temperatures is permissible. The temperature intended is the design temperature (see para. 301.3).

(b) Shear and Bearing. Allowable stresses in shear shall be 0.80 times the basic allowable stress in tension tabulated in Table A-1 or A-2. Allowable stress in bearing shall be 1.60 times that value.

(c) Compression. Allowable stresses in compression shall be no greater than the basic allowable stresses in tension as tabulated in Appendix A. Consideration shall be given to structural stability.

302.3.2 Bases for Design Stresses.[2] The bases for establishing design stress values for bolting materials and allowable stress values for other metallic materials in this Code are as follows: (14)

(a) Bolting Materials. Design stress values at temperature for bolting materials shall not exceed the lowest of the following:

(1) except as provided in (3) below, the lower of one-fourth of specified minimum tensile strength at room temperature (S_T) and one-fourth of tensile strength at temperature

(2) except as provided in (3) below, the lower of two-thirds of specified minimum yield strength at room

[1] If a component is made of castings joined by longitudinal welds, both a casting and a weld joint quality factor shall be applied. The equivalent quality factor E is the product of E_c, Table A-1A, and E_j, Table A-1B.

[2] These bases are the same as those for BPV Code, Section III, Class 1 materials, given in Section II, Part D. Stress values in B31.3, Appendix A, at temperatures below the creep range generally are the same as those listed in Section II, Part D, Tables 2A and 2B, and in Table 3 for bolting, corresponding to those bases. They have been adjusted as necessary to exclude casting quality factors and longitudinal weld joint quality factors. Stress values at temperatures in the creep range generally are the same as those in Section II, Part D, Tables 1A and 1B, corresponding to the bases for Section VIII, Division 1.

Copyright © 2015 by the American Society of Mechanical Engineers.
No reproduction may be made of this material without written consent of ASME.

temperature (S_Y) and two-thirds of yield strength at temperature

(3) at temperatures below the creep range, for bolting materials whose strength has been enhanced by heat treatment or strain hardening, the least of one-fifth of S_T, one-fourth of the tensile strength at temperature, one-fourth of S_Y, and two-thirds of the yield strength at temperature (unless these values are lower than corresponding values for annealed material, in which case the annealed values shall be used)

(4) two-thirds of the yield strength at temperature [see para. 302.3.2(f)]

(5) 100% of the average stress for a creep rate of 0.01% per 1 000 h

(6) 67% of the average stress for rupture at the end of 100 000 h

(7) 80% of minimum stress for rupture at the end of 100 000 h

(b) Gray Iron. Basic allowable stress values at temperature for gray iron shall not exceed the lower of the following:

(1) one-tenth of the specified minimum tensile strength at room temperature

(2) one-tenth of the tensile strength at temperature [see para. 302.3.2(f)]

(c) Malleable Iron. Basic allowable stress values at temperature for malleable iron shall not exceed the lower of the following:

(1) one-fifth of the specified minimum tensile strength at room temperature

(2) one-fifth of the tensile strength at temperature [see para. 302.3.2(f)]

(d) Other Materials. Basic allowable stress values at temperature for materials other than bolting materials, gray iron, and malleable iron shall not exceed the lowest of the following:

(1) the lower of one-third of S_T and one-third of tensile strength at temperature

(2) except as provided in (3) below, the lower of two-thirds of S_Y and two-thirds of yield strength at temperature

(3) for austenitic stainless steels and nickel alloys having similar stress–strain behavior, the lower of two-thirds of S_Y and 90% of yield strength at temperature [see (e) below]

(4) 100% of the average stress for a creep rate of 0.01% per 1 000 h

(5) 67% of the average stress for rupture at the end of 100 000 h

(6) 80% of the minimum stress for rupture at the end of 100 000 h

(7) for structural grade materials, the basic allowable stress shall be 0.92 times the lowest value determined in paras. 302.3.2(d)(1) through (6)

In the application of these criteria, the yield strength at temperature is considered to be $S_Y R_Y$; the tensile strength at temperature is considered to be $1.1 S_T R_T$.

(e) Application Limits. Application of stress values determined in accordance with para. 302.3.2(d)(3) is not recommended for flanged joints and other components in which slight deformation can cause leakage or malfunction. [These values are shown in italics or boldface in Table A-1, as explained in Note (4) to Appendix A Tables.] Instead, either 75% of the stress value in Table A-1 or two-thirds of the yield strength at temperature listed in the BPV Code, Section II, Part D, Table Y-1 should be used.

(f) Unlisted Materials. For a material that conforms to para. 323.1.2, the tensile (yield) strength at temperature shall be derived by multiplying the average expected tensile (yield) strength at temperature by the ratio of S_T (S_Y) divided by the average expected tensile (yield) strength at room temperature.

302.3.3 Casting Quality Factor, E_c

(a) General. The casting quality factors, E_c, defined herein shall be used for cast components not having pressure–temperature ratings established by standards in Table 326.1.

(b) Basic Quality Factors. Castings of gray and malleable iron, conforming to listed specifications, are assigned a basic casting quality factor, E_c, of 1.00 (due to their conservative allowable stress basis). For most other metals, static castings that conform to the material specification and have been visually examined as required by MSS SP-55, Quality Standard for Steel Castings for Valves, Flanges and Fittings and Other Piping Components — Visual Method, are assigned a basic casting quality factor, E_c, of 0.80. Centrifugal castings that meet specification requirements only for chemical analysis, tensile, hydrostatic, and flattening tests, and visual examination are assigned a basic casting quality factor of 0.80. Basic casting quality factors are tabulated for listed specifications in Table A-1A.

(c) Increased Quality Factors. Casting quality factors may be increased when supplementary examinations are performed on each casting. Table 302.3.3C states the increased casting quality factors, E_c, that may be used for various combinations of supplementary examination. Table 302.3.3D states the acceptance criteria for the examination methods specified in the Notes to Table 302.3.3C. Quality factors higher than those shown in Table 302.3.3C do not result from combining tests (2)(a) and (2)(b), or (3)(a) and (3)(b). In no case shall the quality factor exceed 1.00.

Several of the specifications in Appendix A require machining of all surfaces and/or one or more of these supplementary examinations. In such cases, the appropriate increased quality factor is shown in Table A-1A.

Copyright © 2015 by the American Society of Mechanical Engineers.
No reproduction may be made of this material without written consent of ASME.

(14) **Table 302.3.3C Increased Casting Quality Factors, E_c**

Supplementary Examination in Accordance With Note(s)	Factor, E_c
(1)	0.85
(2)(a) or (2)(b)	0.85
(3)(a) or (3)(b)	0.95
(1) and (2)(a) or (2)(b)	0.90
(1) and (3)(a) or (3)(b)	1.00
(2)(a) or (2)(b) and (3)(a) or (3)(b)	1.00

GENERAL NOTE: Titles of standards referenced in this Table's Notes are as follows:

ASME B46.1 Surface Texture (Surface Roughness, Waviness and Lay)
ASTM E94 Guide for Radiographic Examination
ASTM E114 Practice for Ultrasonic Pulse-Echo Straight-Beam Contact Testing
ASTM E125 Reference Photographs for Magnetic Particle Indications on Ferrous Castings
ASTM E165 Practice for Liquid Penetrant Examination for General Industry
ASTM E709 Guide for Magnetic Particle Testing
MSS SP-53 Quality Standard for Steel Castings and Forgings for Valves, Flanges and Fittings and Other Piping Components — Magnetic Particle Examination Method
MSS SP-93 Quality Standard for Steel Castings and Forgings for Valves, Flanges, Fittings, and Other Piping Components — Liquid Penetrant Examination Method

NOTES:

(1) Machine all surfaces to a finish of 6.3 μm R_a (250 μin. R_a in accordance with ASME B46.1), thus increasing the effectiveness of surface examination.

(2) (a) Examine all surfaces of each casting (ferromagnetic material only) by the magnetic particle method in accordance with ASTM E709. Judge acceptability in accordance with MSS SP-53, Table 1.

(b) Examine all surfaces of each casting by the liquid penetrant method, in accordance with ASTM E165. Judge acceptability in accordance with SP-93, Table 1.

(3) (a) Fully examine each casting ultrasonically in accordance with ASTM E114, accepting a casting only if there is no evidence of depth of defects in excess of 5% of wall thickness.

(b) Fully radiograph each casting in accordance with ASTM E94. Judge in accordance with the stated acceptance levels in Table 302.3.3D.

302.3.4 Weld Joint Quality Factor, E_j

(a) Basic Quality Factors. The weld joint quality factors, E_j, tabulated in Table A-1B are basic factors for straight or spiral (helical seam) welded joints for pressure-containing components as shown in Table 302.3.4.

(b) Increased Quality Factors. Table 302.3.4 also indicates higher joint quality factors that may be substituted for those in Table A-1B for certain kinds of welds if additional examination is performed beyond that required by the product specification.

Table 302.3.3D Acceptance Levels for Castings

Material Examined Thickness, T	Applicable Standard	Acceptance Level (or Class)	Acceptable Discontinuities
Steel $T \leq 25$ mm (1 in.)	ASTM E446	1	Types A, B, C
Steel $T > 25$ mm, ≤ 51 mm (2 in.)	ASTM E446	2	Types A, B, C
Steel $T > 51$ mm, ≤ 114 mm ($4\frac{1}{2}$ in.)	ASTM E186	2	Categories A, B, C
Steel $T > 114$ mm, ≤ 305 mm (12 in.)	ASTM E280	2	Categories A, B, C
Aluminum & magnesium	ASTM E155	. . .	Shown in reference radiographs
Copper, Ni–Cu	ASTM E272	2	Codes A, Ba, Bb
Bronze	ASTM E310	2	Codes A and B

GENERAL NOTE: Titles of ASTM standards referenced in this Table are as follows:

E155 Reference Radiographs for Inspection of Aluminum and Magnesium Castings
E186 Reference Radiographs for Heavy-Walled (2 to 4-$\frac{1}{2}$-in. [51 to 114-mm]) Steel Castings
E272 Reference Radiographs for High-Strength Copper-Base and Nickel-Copper Castings
E280 Reference Radiographs for Heavy-Walled (4-$\frac{1}{2}$ to 12-in. [114 to 305-mm]) Steel Castings
E310 Reference Radiographs for Tin Bronze Castings
E446 Reference Radiographs for Steel Castings Up to 2 in. (51 mm) in Thickness

302.3.5 Limits of Calculated Stresses Due to Sustained Loads and Displacement Strains (14)

(a) Internal Pressure Stresses. Stresses due to internal pressure shall be considered safe when the wall thickness of the piping component, including any reinforcement, meets the requirements of para. 304.

(b) External Pressure Stresses. Stresses due to external pressure shall be considered safe when the wall thickness of the piping component, and its means of stiffening, meet the requirements of para. 304.

(c) Stresses Due to Sustained Loads, S_L. The sum of the longitudinal stresses due to sustained loads, S_L, e.g., the pressure and weight in any component in a piping system (see para. 320), shall not exceed S_h, where S_h is taken from Table A-1 at the metal temperature of the operating condition being considered.

(d) Allowable Displacement Stress Range, S_A. The computed displacement stress range, S_E, in a piping system

Copyright © 2015 by the American Society of Mechanical Engineers.
No reproduction may be made of this material without written consent of ASME.

Table 302.3.4 Longitudinal Weld Joint Quality Factor, E_j

No.	Type of Joint		Type of Seam	Examination	Factor, E_j
1	Furnace butt weld, continuous weld		Straight	As required by listed specification	0.60 [Note (1)]
2	Electric resistance weld		Straight or spiral (helical seam)	As required by listed specification	0.85 [Note (1)]
3	Electric fusion weld				
	(a) Single butt weld		Straight or spiral (helical seam)	As required by listed specification or this Code	0.80
	(with or without filler metal)			Additionally spot radiographed in accordance with para. 341.5.1	0.90
				Additionally 100% radiographed in accordance with para. 344.5.1 and Table 341.3.2	1.00
	(b) Double butt weld		Straight or spiral (helical seam) [except as provided in 4 below]	As required by listed specification or this Code	0.85
	(with or without filler metal)			Additionally spot radiographed in accordance with para. 341.5.1	0.90
				Additionally 100% radiographed in accordance with para. 344.5.1 and Table 341.3.2	1.00
4	Specific specification				
	API 5L	Submerged arc weld (SAW) Gas metal arc weld (GMAW) Combined GMAW, SAW 	Straight with one or two seams Spiral (helical seam)	As required by specification Additionally 100% radiographed in accordance with para. 344.5.1 and Table 341.3.2	0.95 1.00

NOTE:
(1) It is not permitted to increase the joint quality factor by additional examination for joint 1 or 2.

Copyright © 2015 by the American Society of Mechanical Engineers.
No reproduction may be made of this material without written consent of ASME.

Fig. 302.3.5 Stress Range Factor, *f*

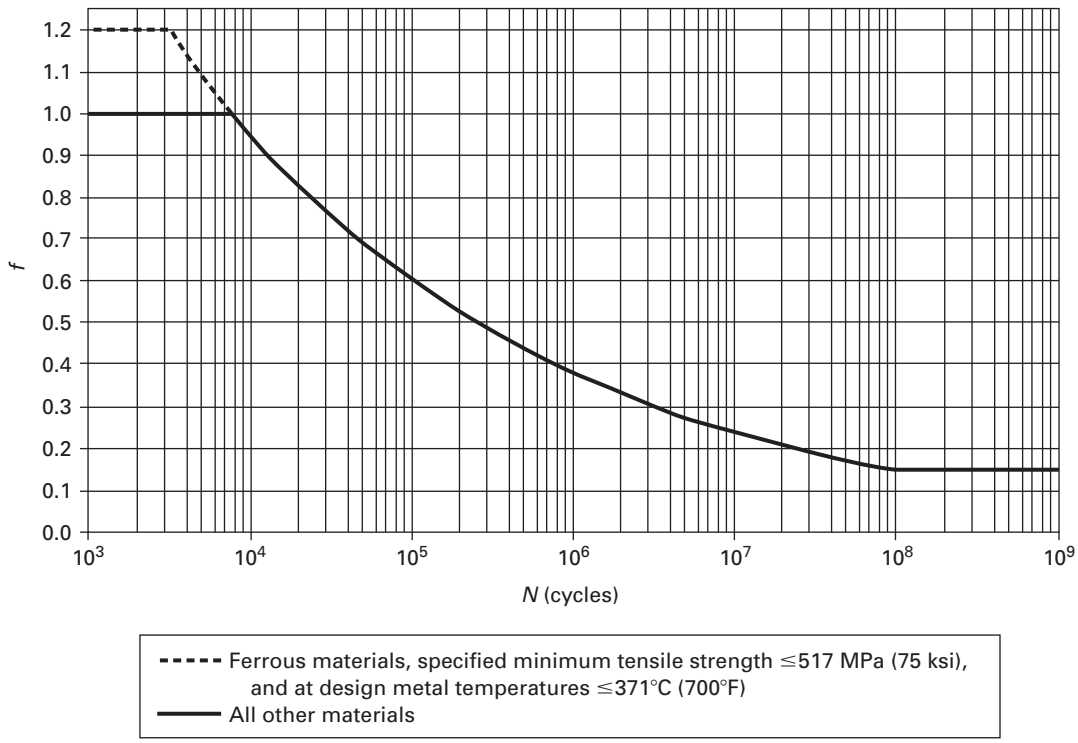

(see para. 319.4.4) shall not exceed the allowable displacement stress range, S_A (see paras. 319.2.3 and 319.3.4), calculated by eq. (1a)

$$S_A = f\left(1.25S_c + 0.25S_h\right) \tag{1a}$$

When S_h is greater than S_L, the difference between them may be added to the term $0.25S_h$ in eq. (1a). In that case, the allowable stress range is calculated by eq. (1b)

$$S_A = f\left[1.25\left(S_c + S_h\right) - S_L\right] \tag{1b}$$

For eqs. (1a) and (1b)

f = stress range factor,[3] calculated by eq. (1c)[4]

$$f \text{ (see Fig. 302.3.5)} = 6.0\left(N\right)^{-0.2} \le f_m \tag{1c}$$

f_m = maximum value of stress range factor; 1.2 for ferrous materials with specified minimum tensile strengths ≤ 517 MPa (75 ksi) and at metal temperatures ≤ 371°C (700°F); otherwise f_m = 1.0

N = equivalent number of full displacement cycles during the expected service life of the piping system[5]

S_c = basic allowable stress[6] at minimum metal temperature expected during the displacement cycle under analysis
= 138 MPa (20 ksi) maximum

S_h = basic allowable stress[6] at maximum metal temperature expected during the displacement cycle under analysis
= 138 MPa (20 ksi) maximum

S_L = stress due to sustained loads; in systems where supports may be active in some conditions and inactive in others, the maximum value of sustained stress, considering all support conditions, shall be used

When the computed stress range varies, whether from thermal expansion or other conditions, S_E is defined as the greatest computed displacement stress range. The value of N in such cases can be calculated by eq. (1d)

$$N = N_E + \sum\left(r_i^5 N_i\right) \text{ for } i = 1, 2, \ldots, n \tag{1d}$$

[3] Applies to essentially noncorroded piping. Corrosion can sharply decrease cyclic life; therefore, corrosion resistant materials should be considered where a large number of major stress cycles is anticipated.

[4] The minimum value for f is 0.15, which results in an allowable displacement stress range, S_A, for an indefinitely large number of cycles.

[5] The designer is cautioned that the fatigue life of materials operated at elevated temperature may be reduced.

[6] For castings, the basic allowable stress shall be multiplied by the applicable casting quality factor, E_c. For longitudinal welds, the basic allowable stress need not be multiplied by the weld quality factor, E_j.

Copyright © 2015 by the American Society of Mechanical Engineers.
No reproduction may be made of this material without written consent of ASME.

where

N_E = number of cycles of maximum computed displacement stress range, S_E

N_i = number of cycles associated with displacement stress range, S_i

r_i = S_i/S_E

S_i = any computed displacement stress range smaller than S_E

(e) Weld Joint Strength Reduction Factor, W. At elevated temperatures, the long-term strength of weld joints may be lower than the long-term strength of the base material. For longitudinal or spiral (helical seam) welded piping components, the product of the allowable stress and the applicable weld quality factor, *SE*, shall be multiplied by the weld joint strength reduction factor, *W*, when determining the required wall thickness for internal pressure in accordance with para. 304. The designer is responsible for the application of weld joint strength reduction factors to welds other than longitudinal and spiral (helical seam) (e.g., circumferential). The weld joint strength reduction factor, *W*, is equal to 1.0 when evaluating occasional loads such as wind and earthquake, or when evaluating permissible variations in accordance with para. 302.2.4. The pressure rating or allowable stress for the occasional load or variation condition is not required to be reduced by the weld joint strength reduction factor. It is also not required when calculating the allowable stress range for displacement stresses, S_A, in para. 302.3.5(d). The weld joint strength reduction factor only applies at weld locations. The weld joint strength reduction factor is the ratio of the nominal stress to cause failure of the weld joint to that of the base material for the same duration. Except as provided in (f) below, the weld joint strength reduction factor, *W*, shall be in accordance with Table 302.3.5.

(f) Unlisted Weld Strength Reduction Factors. A weld strength reduction factor other than that listed in Table 302.3.5 may be used in accordance with one of the following criteria:

(1) Creep test data may be used to determine the weld joint strength reduction factor, *W*. However, the use of creep test data to increase the factor *W* above that shown in Table 302.3.5 is not permitted for the CrMo and Creep Strength Enhanced Ferritic (CSEF) steels materials, as defined in Table 302.3.5. Creep testing of weld joints to determine weld joint strength reduction factors, when permitted, should be full thickness cross-weld specimens with test durations of at least 1 000 h. Full thickness tests shall be used unless the designer otherwise considers effects such as stress redistribution across the weld.

(2) With the owner's approval, extensive successful experience may be used to justify the factor *W* above that shown in Table 302.3.5. Successful experience must include same or like material, weld metal composition, and welding process under equivalent, or more severe, sustained operating conditions.

302.3.6 Limits of Calculated Stresses Due to Occasional Loads (14)

(a) Operation. The sum of the longitudinal stresses, S_L, due to sustained loads, such as pressure and weight, and of the stresses produced by occasional loads, such as wind or earthquake, may be as much as 1.33 times the basic allowable stress given in Appendix A. Wind and earthquake forces need not be considered as acting concurrently. When detailed analysis is performed, the stresses shall be computed and combined using eqs. (23a) through (23d) with the applicable loads for the condition being evaluated.

For Elevated Temperature Fluid Service (see definition in para. 300.2), as an alternative to the use of 1.33 times the basic allowable stress provided in Table A-1, the allowable stress for occasional loads of short duration, such as surge, extreme wind, or earthquake, may be taken as the strength reduction factor times 90% of the yield strength at temperature for materials other than those with nonductile behavior. This yield strength shall be as listed in the BPV Code, Section II, Part D, Table Y-1, or determined in accordance with para. 302.3.2(f). The strength reduction factor represents the reduction in yield strength with long-term exposure of the material to elevated temperatures and, in the absence of more applicable data, shall be taken as 1.0 for austenitic stainless steel and 0.8 for other materials.

For castings, the basic allowable stress shall be multiplied by the casting quality factor, E_c. Where the allowable stress value exceeds two-thirds of yield strength at temperature, the allowable stress value must be reduced as specified in para. 302.3.2(e).

(b) Test. Stresses due to test conditions are not subject to the limitations in para. 302.3. It is not necessary to consider other occasional loads, such as wind and earthquake, as occurring concurrently with test loads.

302.4 Allowances

In determining the minimum required thickness of a piping component, allowances shall be included for corrosion, erosion, and thread depth or groove depth. See definition for *c* in para. 304.1.1(b).

302.5 Mechanical Strength

(a) Designs shall be checked for adequacy of mechanical strength under applicable loadings. When necessary, the wall thickness shall be increased to prevent overstress, damage, collapse, or buckling due to superimposed loads from supports, ice formation, backfill, transportation, handling, or other loads enumerated in para. 301.

(b) Where increasing the thickness would excessively increase local stresses or the risk of brittle fracture, or is otherwise impracticable, the impact of applied loads

Copyright © 2015 by the American Society of Mechanical Engineers.
No reproduction may be made of this material without written consent of ASME.

Table 302.3.5 Weld Joint Strength Reduction Factor, *W*

Steel Group	Component Temperature, T_i, °C (°F)														
	427 (800)	454 (850)	482 (900)	510 (950)	538 (1,000)	566 (1,050)	593 (1,100)	621 (1,150)	649 (1,200)	677 (1,250)	704 (1,300)	732 (1,350)	760 (1,400)	788 (1,450)	816 (1,500)
CrMo [Notes (1)–(3)]	1	0.95	0.91	0.86	0.82	0.77	0.73	0.68	0.64	. . .	. . .	. . .	. . .	. . .	. . .
CSEF (N + T) [Notes (3)–(5)]	. . .	. . .	. . .	1	0.95	0.91	0.86	0.82	0.77	. . .	. . .	. . .	. . .	. . .	. . .
CSEF [Notes (3) and (4)] (Subcritical PWHT)	. . .	. . .	1	0.5	0.5	0.5	0.5	0.5	0.5	. . .	. . .	. . .	. . .	. . .	. . .
Autogenous welds in austenitic stainless grade 3xx, and N088xx and N066xx nickel alloys [Note (6)]	. . .	. . .	. . .	1	1	1	1	1	1	1	1	1	1	1	1
Austenitic stainless grade 3xx and N088xx nickel alloys [Notes (7) and (8)]	. . .	. . .	. . .	1	0.95	0.91	0.86	0.82	0.77	0.73	0.68	0.64	0.59	0.55	0.5
Other materials [Note (9)]	. . .	. . .	. . .	. . .	. . .	. . .	. . .	. . .	. . .	. . .	. . .	. . .	. . .	. . .	. . .

GENERAL NOTES:

(a) Weld joint strength reduction factors at temperatures above the upper temperature limit listed in Appendix A for the base metal or outside of the applicable range in Table 302.3.5 are the responsibility of the designer. At temperatures below those where weld joint strength reduction factors are tabulated, a value of 1.0 shall be used for the factor *W* where required; however, the additional rules of this Table and Notes do not apply.

(b) T_{cr} = temperature 25°C (50°F) below the temperature identifying the start of time-dependent properties listed under "NOTES – TIME-DEPENDENT PROPERTIES" (Txx) in the Notes to Tables 1A and 1B of the BPV Code Section II, Part D for the base metals joined by welding. For materials not listed in the BPV Code Section II, Part D, T_{cr} shall be the temperature where the creep rate or stress rupture criteria in paras. 302.3.2(d)(4), (5), and (6) governs the basic allowable stress value of the metals joined by welding. When the base metals differ, the lower value of T_{cr} shall be used for the weld joint.

(c) T_i = temperature, °C (°F), of the component for the coincident operating pressure–temperature condition, *i*, under consideration.

(d) CAUTIONARY NOTE: There are many factors that may affect the life of a welded joint at elevated temperature and all of those factors cannot be addressed in a table of weld strength reduction factors. For example, fabrication issues such as the deviation from a true circular form in pipe (e.g., "peaking" at longitudinal weld seams) or offset at the weld joint can cause an increase in stress that may result in reduced service life and control of these deviations is recommended.

(e) The weld joint strength reduction factor, *W*, may be determined using linear interpolation for intermediate temperature values.

NOTES:

(1) The Cr–Mo Steels include: ½Cr–½Mo, 1Cr–½Mo, 1¼Cr–½Mo–Si, 2¼Cr–1Mo, 3Cr–1Mo, 5Cr–½Mo, 9Cr–1Mo. Longitudinal and spiral (helical seam) welds shall be normalized, normalized and tempered, or subjected to proper subcritical postweld heat treatment (PWHT) for the alloy. Required examination is in accordance with para. 341.4.4 or 305.2.4.

(2) Longitudinal and spiral (helical seam) seam fusion welded construction is not permitted for C–½Mo steel above 850°F.

(3) The required carbon content of the weld filler metal shall be ≥0.05 C wt. %. See para. 341.4.4(b) for examination requirements. Basicity index of SAW flux ≥1.0.

(4) The CSEF (Creep Strength Enhanced Ferritic) steels include grades 91, 92, 911, 122, and 23.

(5) N + T = Normalizing + Tempering PWHT.

(6) Autogenous welds without filler metal in austenitic stainless steel (grade 3xx) and austenitic nickel alloys UNS Nos. N066xx and N088xx. A solution anneal after welding is required for use of the factors in the Table. See para. 341.4.3(b) for examination requirements.

(7) Alternatively, the 100,000 hr Stress Rupture Factors listed in ASME Section III, Division 1, Subsection NH, Tables I-14.10 A-xx, B-xx, and C-xx may be used as the weld joint strength reduction factor for the materials and welding consumables specified.

(8) Certain heats of the austenitic stainless steels, particularly for those grades whose creep strength is enhanced by the precipitation of temper-resistant carbides and carbonitrides, can suffer from an embrittlement condition in the weld heat affected zone that can lead to premature failure of welded components operating at elevated temperatures. A solution annealing heat treatment of the weld area mitigates this susceptibility.

(9) For carbon steel, $W = 1.0$ for all temperatures. For materials other than carbon steel, CrMo, CSEF, and the austenitic alloys listed in Table 302.3.5, *W* shall be as follows: For $T_i \le T_{cr}$, $W = 1.0$. For $T_{cr} < T_i \le 1{,}500$°F, $W = 1 - 0.000909(T_i - T_{cr})$. If T_i exceeds the upper temperature for which an allowable stress value is listed in Appendix A for the base metal, the value for *W* is the responsibility of the designer.

Copyright © 2015 by the American Society of Mechanical Engineers.
No reproduction may be made of this material without written consent of ASME.

may be mitigated through additional supports, braces, or other means without requiring an increased wall thickness. Particular consideration should be given to the mechanical strength of small pipe connections to piping or equipment.

PART 2
PRESSURE DESIGN OF PIPING COMPONENTS

303 GENERAL

Components manufactured in accordance with standards listed in Table 326.1 shall be considered suitable for use at pressure–temperature ratings in accordance with para. 302.2.1 or para. 302.2.2, as applicable. The rules in para. 304 are intended for pressure design of components not covered in Table 326.1, but may be used for a special or more-rigorous design of such components, or to satisfy requirements of para. 302.2.2. Designs shall be checked for adequacy of mechanical strength as described in para. 302.5.

304 PRESSURE DESIGN OF COMPONENTS

304.1 Straight Pipe

304.1.1 General

(a) The required thickness of straight sections of pipe shall be determined in accordance with eq. (2)

$$t_m = t + c \tag{2}$$

The minimum thickness, T, for the pipe selected, considering manufacturer's minus tolerance, shall be not less than t_m.

(b) The following nomenclature is used in the equations for pressure design of straight pipe:

c = sum of the mechanical allowances (thread or groove depth) plus corrosion and erosion allowances. For threaded components, the nominal thread depth (dimension h of ASME B1.20.1, or equivalent) shall apply. For machined surfaces or grooves where the tolerance is not specified, the tolerance shall be assumed to be 0.5 mm (0.02 in.) in addition to the specified depth of the cut.

D = outside diameter of pipe as listed in tables of standards or specifications or as measured

d = inside diameter of pipe. For pressure design calculation, the inside diameter of the pipe is the maximum value allowable under the purchase specification.

E = quality factor from Table A-1A or A-1B

P = internal design gage pressure

S = stress value for material from Table A-1

T = pipe wall thickness (measured or minimum in accordance with the purchase specification)

t = pressure design thickness, as calculated in accordance with para. 304.1.2 for internal pressure or as determined in accordance with para. 304.1.3 for external pressure

t_m = minimum required thickness, including mechanical, corrosion, and erosion allowances

W = weld joint strength reduction factor in accordance with para. 302.3.5(e)

Y = coefficient from Table 304.1.1, valid for $t < D/6$ and for materials shown. The value of Y may be interpolated for intermediate temperatures. For $t \geq D/6$,

$$Y = \frac{d + 2c}{D + d + 2c}$$

304.1.2 Straight Pipe Under Internal Pressure

(a) For $t < D/6$, the internal pressure design thickness for straight pipe shall be not less than that calculated in accordance with either eq. (3a) or eq. (3b)

$$t = \frac{PD}{2(SEW + PY)} \tag{3a}$$

$$t = \frac{P(d + 2c)}{2[SEW - P(1 - Y)]} \tag{3b}$$

(b) For $t \geq D/6$ or for $P/SE > 0.385$, calculation of pressure design thickness for straight pipe requires special consideration of factors such as theory of failure, effects of fatigue, and thermal stress.

304.1.3 Straight Pipe Under External Pressure. To determine wall thickness and stiffening requirements for straight pipe under external pressure, the procedure outlined in the BPV Code, Section VIII, Division 1, UG-28 through UG-30 shall be followed, using as the design length, L, the running centerline length between any two sections stiffened in accordance with UG-29. As an exception, for pipe with $D_o/t < 10$, the value of S to be used in determining P_{a2} shall be the lesser of the following values for pipe material at design temperature:

(a) 1.5 times the stress value from Table A-1 of this Code, or

(b) 0.9 times the yield strength tabulated in Section II, Part D, Table Y-1 for materials listed therein

(The symbol D_o in Section VIII is equivalent to D in this Code.)

304.2 Curved and Mitered Segments of Pipe

304.2.1 Pipe Bends. The minimum required thickness, t_m, of a bend, after bending, in its finished form, shall be determined in accordance with eqs. (2) and (3c)

$$t = \frac{PD}{2[(SEW/I) + PY]} \tag{3c}$$

where at the intrados (inside bend radius)

$$I = \frac{4(R_1/D) - 1}{4(R_1/D) - 2} \tag{3d}$$

Copyright © 2015 by the American Society of Mechanical Engineers.
No reproduction may be made of this material without written consent of ASME.

Table 304.1.1 Values of Coefficient Y for $t < D/6$ (14)

Material	Temperature, °C (°F)							
	482 (900) and Below	510 (950)	538 (1,000)	566 (1,050)	593 (1,100)	621 (1,150)	649 (1,200)	677 (1,250) and Above
Ferritic steels	0.4	0.5	0.7	0.7	0.7	0.7	0.7	0.7
Austenitic steels	0.4	0.4	0.4	0.4	0.5	0.7	0.7	0.7
Nickel alloys UNS Nos. N06617, N08800, N08810, and N08825	0.4	0.4	0.4	0.4	0.4	0.4	0.5	0.7
Gray iron	0.0	. . .	. . .	. . .	. . .	. . .	. . .	. . .
Other ductile metals	0.4	0.4	0.4	0.4	0.4	0.4	0.4	0.4

Fig. 304.2.1 Nomenclature for Pipe Bends

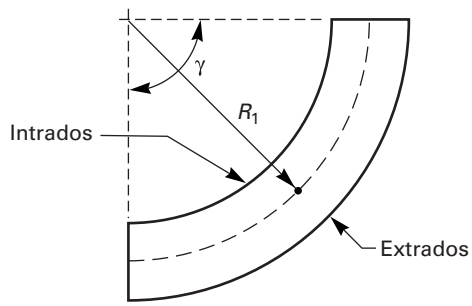

and at the extrados (outside bend radius)

$$I = \frac{4(R_1/D) + 1}{4(R_1/D) + 2} \tag{3e}$$

and at the sidewall on the bend centerline radius, $I = 1.0$, and where

R_1 = bend radius of welding elbow or pipe bend

Thickness variations from the intrados to the extrados and along the length of the bend shall be gradual. The thickness requirements apply at the mid-span of the bend, $\gamma/2$, at the intrados, extrados, and bend centerline radius. The minimum thickness at the end tangents shall not be less than the requirements of para. 304.1 for straight pipe (see Fig. 304.2.1).

304.2.2 Elbows. Manufactured elbows not in accordance with para. 303 shall be qualified as required by para. 304.7.2 or designed in accordance with para. 304.2.1, except as provided in para. 328.4.2(b)(6).

304.2.3 Miter Bends. An angular offset of 3 deg or less (angle α in Fig. 304.2.3) does not require design consideration as a miter bend. Acceptable methods for pressure design of multiple and single miter bends are given in (a) and (b) below.

(a) Multiple Miter Bends. The maximum allowable internal pressure shall be the lesser value calculated from

Fig. 304.2.3 Nomenclature for Miter Bends

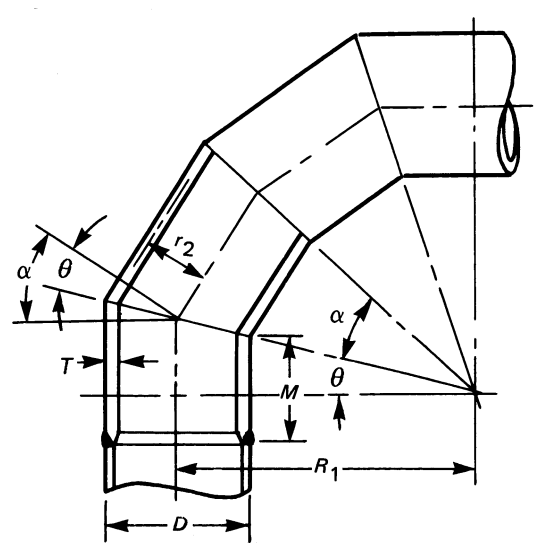

eqs. (4a) and (4b). These equations are not applicable when θ exceeds 22.5 deg.

$$P_m = \frac{SEW(T-c)}{r_2}\left(\frac{T-c}{(T-c) + 0.643\tan\theta\sqrt{r_2(T-c)}}\right) \tag{4a}$$

$$P_m = \frac{SEW(T-c)}{r_2}\left(\frac{R_1 - r_2}{R_1 - 0.5r_2}\right) \tag{4b}$$

(b) Single Miter Bends

(1) The maximum allowable internal pressure for a single miter bend with angle θ not greater than 22.5 deg shall be calculated by eq. (4a).

(2) The maximum allowable internal pressure for a single miter bend with angle θ greater than 22.5 deg shall be calculated by eq. (4c)

$$P_m = \frac{SEW(T-c)}{r_2}\left(\frac{T-c}{(T-c) + 1.25\tan\theta\sqrt{r_2(T-c)}}\right) \tag{4c}$$

Copyright © 2015 by the American Society of Mechanical Engineers.
No reproduction may be made of this material without written consent of ASME.

(c) The miter pipe wall thickness, T, used in eqs. (4a), (4b), and (4c) shall extend a distance not less than M from the inside crotch of the end miter welds where

M = the larger of $2.5(r_2T)^{0.5}$ or $\tan\theta\,(R_1 - r_2)$

The length of taper at the end of the miter pipe may be included in the distance, M.

(d) The following nomenclature is used in eqs. (4a), (4b), and (4c) for the pressure design of miter bends:

c = same as defined in para. 304.1.1
E = same as defined in para. 304.1.1
P_m = maximum allowable internal pressure for miter bends
R_1 = effective radius of miter bend, defined as the shortest distance from the pipe centerline to the intersection of the planes of adjacent miter joints
r_2 = mean radius of pipe using nominal wall $\overline{T}$
S = same as defined in para. 304.1.1
T = miter pipe wall thickness (measured or minimum in accordance with the purchase specification)
W = same as defined in para. 304.1.1
α = angle of change in direction at miter joint = 2θ
θ = angle of miter cut

For compliance with this Code, the value of R_1 shall be not less than that given by eq. (5)

$$R_1 = \frac{A}{\tan\theta} + \frac{D}{2} \tag{5}$$

where A has the following empirical values:

(1) For SI metric units

$(T - c)$, mm	A
≤ 13	25
$13 < (T - c) < 22$	$2(T - c)$
≥ 22	$[2(T - c)/3] + 30$

(2) For U.S. Customary units

$(T - c)$, in.	A
≤ 0.5	1.0
$0.5 < (T - c) < 0.88$	$2(T - c)$
≥ 0.88	$[2(T - c)/3] + 1.17$

304.2.4 Curved and Mitered Segments of Pipe Under External Pressure. The wall thickness of curved and mitered segments of pipe subjected to external pressure may be determined as specified for straight pipe in para. 304.1.3.

304.3 Branch Connections

304.3.1 General

(a) Except as provided in (b) below, the requirements in paras. 304.3.2 through 304.3.4 are applicable to branch connections made in accordance with the following methods:

(1) fittings (tees, extruded outlets, branch outlet fittings in accordance with MSS SP-97, laterals, crosses)

(2) unlisted cast or forged branch connection fittings (see para. 300.2), and couplings not over DN 80 (NPS 3), attached to the run pipe by welding

(3) welding the branch pipe directly to the run pipe, with or without added reinforcement, as covered in para. 328.5.4

(b) The rules in paras. 304.3.2 through 304.3.4 are minimum requirements, valid only for branch connections in which (using the nomenclature of Fig. 304.3.3)

(1) the run pipe diameter-to-thickness ratio (D_h/T_h) is less than 100 and the branch-to-run diameter ratio (D_b/D_h) is not greater than 1.0

(2) for run pipe with $D_h/T_h \geq 100$, the branch diameter, D_b, is less than one-half the run diameter, D_h

(3) angle β is at least 45 deg

(4) the axis of the branch intersects the axis of the run

(c) Where the provisions of (a) and (b) above are not met, pressure design shall be qualified as required by para. 304.7.2.

(d) Other design considerations relating to branch connections are stated in para. 304.3.5.

304.3.2 Strength of Branch Connections. A pipe having a branch connection is weakened by the opening that must be made in it and, unless the wall thickness of the pipe is sufficiently in excess of that required to sustain the pressure, it is necessary to provide added reinforcement. The amount of reinforcement required to sustain the pressure shall be determined in accordance with para. 304.3.3 or 304.3.4. There are, however, certain branch connections that have adequate pressure strength or reinforcement as constructed. It may be assumed without calculation that a branch connection has adequate strength to sustain the internal and external pressure that will be applied to it if

(a) the branch connection is made with a listed branch type fitting such as an ASME B16.9 or ASME B16.11 tee, or MSS SP-97 branch connection fitting. See para. 303.

(b) the branch connection is made by welding a listed threaded or socket welding coupling or listed half coupling directly to the run in accordance with para. 328.5.4, provided the size of the branch does not exceed DN 50 (NPS 2) nor one-fourth the nominal size of the run. The minimum wall thickness of the coupling anywhere in the reinforcement zone (if threads are in the zone, wall thickness is measured from root of thread to minimum outside diameter) shall be not less than that of the unthreaded branch pipe. In no case shall a coupling or half coupling have a rating less than Class 2000 in accordance with ASME B16.11.

(c) the branch connection utilizes an unlisted branch connection fitting (see para. 300.2), provided the fitting

Copyright © 2015 by the American Society of Mechanical Engineers.
No reproduction may be made of this material without written consent of ASME.

is made from materials listed in Table A-1 and provided that the branch connection is qualified as required by para. 304.7.2.

304.3.3 Reinforcement of Welded Branch Connections. Added reinforcement is required to meet the criteria in paras. 304.3.3(b) and (c) when it is not inherent in the components of the branch connection. Sample problems illustrating the calculations for branch reinforcement are shown in Appendix H.

(a) Nomenclature. The nomenclature below is used in the pressure design of branch connections. It is illustrated in Fig. 304.3.3, which does not indicate details for construction or welding. Some of the terms defined in Appendix J are subject to further definitions or variations, as follows:

b = subscript referring to branch

d_1 = effective length removed from pipe at branch. For branch intersections where the branch opening is a projection of the branch pipe inside diameter (e.g., pipe-to-pipe fabricated branch), $d_1 = [D_b - 2(T_b - c)]/\sin\beta$

d_2 = "half width" of reinforcement zone
= d_1 or $(T_b - c) + (T_h - c) + d_1/2$, whichever is greater, but in any case not more than D_h

h = subscript referring to run or header

L_4 = height of reinforcement zone outside of run pipe
= $2.5(T_h - c)$ or $2.5(T_b - c) + T_r$, whichever is less

T_b = branch pipe thickness (measured or minimum in accordance with the purchase specification) except for branch connection fittings (see para. 300.2). For such connections the value of T_b for use in calculating L_4, d_2, and A_3 is the thickness of the reinforcing barrel (minimum per purchase specification), provided that the barrel thickness is uniform (see Fig. K328.5.4) and extends at least to the L_4 limit (see Fig. 304.3.3).

T_r = minimum thickness of reinforcing ring or saddle made from pipe (use nominal thickness if made from plate)
= 0, if there is no reinforcing ring or saddle

t = pressure design thickness of pipe, according to the appropriate wall thickness equation or procedure in para. 304.1. For welded pipe, when the branch does not intersect the longitudinal weld of the run, the basic allowable stress, S, for the pipe may be used in determining t_h for the purpose of reinforcement calculation only. When the branch does intersect the longitudinal weld of the run, the product SEW (of the stress value, S; the appropriate weld joint quality factor, E_j, from Table A-1B; and the weld joint strength reduction factor, W; see para. 302.3.5) for the run pipe shall be used in the calculation. The product SEW of the branch shall be used in calculating t_b.

β = smaller angle between axes of branch and run

(b) Required Reinforcement Area. The reinforcement area, A_1, required for a branch connection under internal pressure is

$$A_1 = t_h d_1 (2 - \sin\beta) \tag{6}$$

For a branch connection under external pressure, area A_1 is one-half the area calculated by eq. (6), using as t_h the thickness required for external pressure.

(c) Available Area. The area available for reinforcement is defined as

$$A_2 + A_3 + A_4 \geq A_1 \tag{6a}$$

These areas are all within the reinforcement zone and are further defined below.

(1) Area A_2 is the area resulting from excess thickness in the run pipe wall

$$A_2 = (2d_2 - d_1)(T_h - t_h - c) \tag{7}$$

(2) Area A_3 is the area resulting from excess thickness in the branch pipe wall

$$A_3 = 2L_4(T_b - t_b - c)/\sin\beta \tag{8}$$

If the allowable stress for the branch pipe wall is less than that for the run pipe, its calculated area must be reduced in the ratio of allowable stress values of the branch to the run in determining its contributions to area A_3.

(3) Area A_4 is the area of other metal provided by welds and properly attached reinforcement. [See para. 304.3.3(f).] Weld areas shall be based on the minimum dimensions specified in para. 328.5.4, except that larger dimensions may be used if the welder has been specifically instructed to make the welds to those dimensions.

(d) Reinforcement Zone. The reinforcement zone is a parallelogram whose length extends a distance, d_2, on each side of the centerline of the branch pipe and whose width starts at the inside surface of the run pipe (in its corroded condition) and extends beyond the outside surface of the run pipe a perpendicular distance, L_4.

(e) Multiple Branches. When two or more branch connections are so closely spaced that their reinforcement zones overlap, the distance between centers of the openings should be at least 1½ times their average diameter, and the area of reinforcement between any two openings shall be not less than 50% of the total that both require. Each opening shall have adequate reinforcement in accordance with paras. 304.3.3(b) and (c). No part of the metal cross section may apply to more than one opening or be evaluated more than once in any combined area.

Copyright © 2015 by the American Society of Mechanical Engineers.
No reproduction may be made of this material without written consent of ASME.

Fig. 304.3.3 Branch Connection Nomenclature

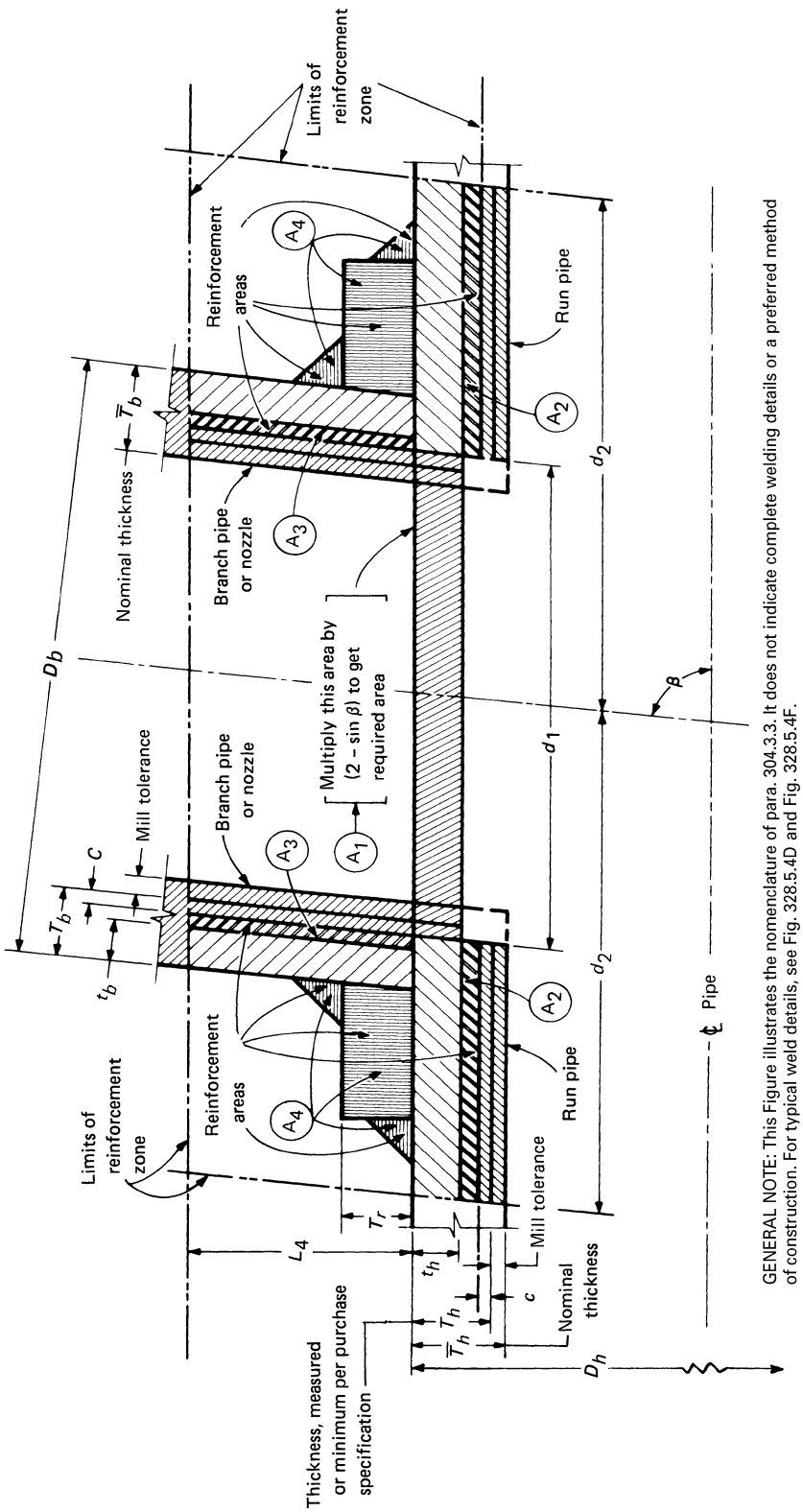

GENERAL NOTE: This Figure illustrates the nomenclature of para. 304.3.3. It does not indicate complete welding details or a preferred method of construction. For typical weld details, see Fig. 328.5.4D and Fig. 328.5.4F.

(14)

Copyright © 2015 by the American Society of Mechanical Engineers.
No reproduction may be made of this material without written consent of ASME.

(Consult PFI Standard ES-7 for detailed recommendations on spacing of welded nozzles.)

(f) Added Reinforcement

(1) Reinforcement added in the form of a ring or saddle as part of area A_4 shall be of reasonably constant width.

(2) Material used for reinforcement may differ from that of the run pipe provided it is compatible with run and branch pipes with respect to weldability, heat treatment requirements, galvanic corrosion, thermal expansion, etc.

(3) If the allowable stress for the reinforcement material is less than that for the run pipe, its calculated area must be reduced in the ratio of allowable stress values in determining its contribution to area A_4.

(4) No additional credit may be taken for a material having higher allowable stress value than the run pipe.

304.3.4 Reinforcement of Extruded Outlet Headers

(a) The principles of reinforcement stated in para. 304.3.3 are essentially applicable to extruded outlet headers. An extruded outlet header is a length of pipe in which one or more outlets for branch connection have been formed by extrusion, using a die or dies to control the radii of the extrusion. The extruded outlet projects above the surface of the header a distance h_x at least equal to the external radius of the outlet r_x (i.e., $h_x \geq r_x$).

(b) The rules in para. 304.3.4 are minimum requirements, valid only within the limits of geometry shown in Fig. 304.3.4, and only where the axis of the outlet intersects and is perpendicular to the axis of the header. Where these requirements are not met, or where nonintegral material such as a ring, pad, or saddle has been added to the outlet, pressure design shall be qualified as required by para. 304.7.2.

(c) Nomenclature. The nomenclature used herein is illustrated in Fig. 304.3.4. Note the use of subscript x signifying extruded. Refer to para. 304.3.3(a) for nomenclature not listed here.

d_x = the design inside diameter of the extruded outlet, measured at the level of the outside surface of the header. This dimension is taken after removal of all mechanical and corrosion allowances, and all thickness tolerances.

d_2 = half width of reinforcement zone (equal to d_x)

h_x = height of the extruded outlet. This must be equal to or greater than r_x [except as shown in sketch (b) in Fig. 304.3.4].

L_5 = height of reinforcement zone
= $0.7\sqrt{D_b T_x}$

r_x = radius of curvature of external contoured portion of outlet, measured in the plane containing the axes of the header and branch

T_x = corroded finished thickness of extruded outlet, measured at a height equal to r_x above the outside surface of the header

(d) Limitations on Radius r_x. The external contour radius, r_x, is subject to the following limitations:

(1) minimum r_x — the lesser of $0.05D_b$ or 38 mm (1.50 in.)

(2) maximum r_x shall not exceed

(a) for $D_b <$ DN 200 (NPS 8), 32 mm (1.25 in.)

(b) for $D_b \geq$ DN 200, $0.1D_b$ + 13 mm (0.50 in.)

(3) for an external contour with multiple radii, the requirements of (1) and (2) above apply, considering the best-fit radius over a 45 deg arc as the maximum radius

(4) machining shall not be employed in order to meet the above requirements

(e) Required Reinforcement Area. The required area of reinforcement is defined by

$$A_1 = Kt_h d_x \tag{9}$$

where K is determined as follows:

(1) For $D_b/D_h > 0.60$, $K = 1.00$.

(2) For $0.60 \geq D_b/D_h > 0.15$, $K = 0.6 + \frac{2}{3}(D_b/D_h)$.

(3) For $D_b/D_h \leq 0.15$, $K = 0.70$.

(f) Available Area. The area available for reinforcement is defined as

$$A_2 + A_3 + A_4 \geq A_1 \tag{9a}$$

These areas are all within the reinforcement zone and are further defined below.

(1) Area A_2 is the area resulting from excess thickness in the header wall

$$A_2 = (2d_2 - d_x)(T_h - t_h - c) \tag{10}$$

(2) Area A_3 is the area resulting from excess thickness in the branch pipe wall

$$A_3 = 2L_5(T_b - t_b - c) \tag{11}$$

(3) Area A_4 is the area resulting from excess thickness in the extruded outlet lip

$$A_4 = 2r_x[T_x - (T_b - c)] \tag{12}$$

(g) Reinforcement of Multiple Openings. The rules of para. 304.3.3(e) shall be followed, except that the required area and reinforcement area shall be as given in para. 304.3.4.

(h) Identification. The manufacturer shall establish the design pressure and temperature for each extruded outlet header and shall mark the header with this information, together with the symbol "B31.3" (indicating the applicable Code Section) and the manufacturer's name or trademark.

304.3.5 Additional Design Considerations. The requirements of paras. 304.3.1 through 304.3.4 are intended to ensure satisfactory performance of a branch

Copyright © 2015 by the American Society of Mechanical Engineers.
No reproduction may be made of this material without written consent of ASME.

Fig. 304.3.4 Extruded Outlet Header Nomenclature

This Figure illustrates the nomenclature of para. 304.3.4. It does not indicate complete details or a preferred method of construction.

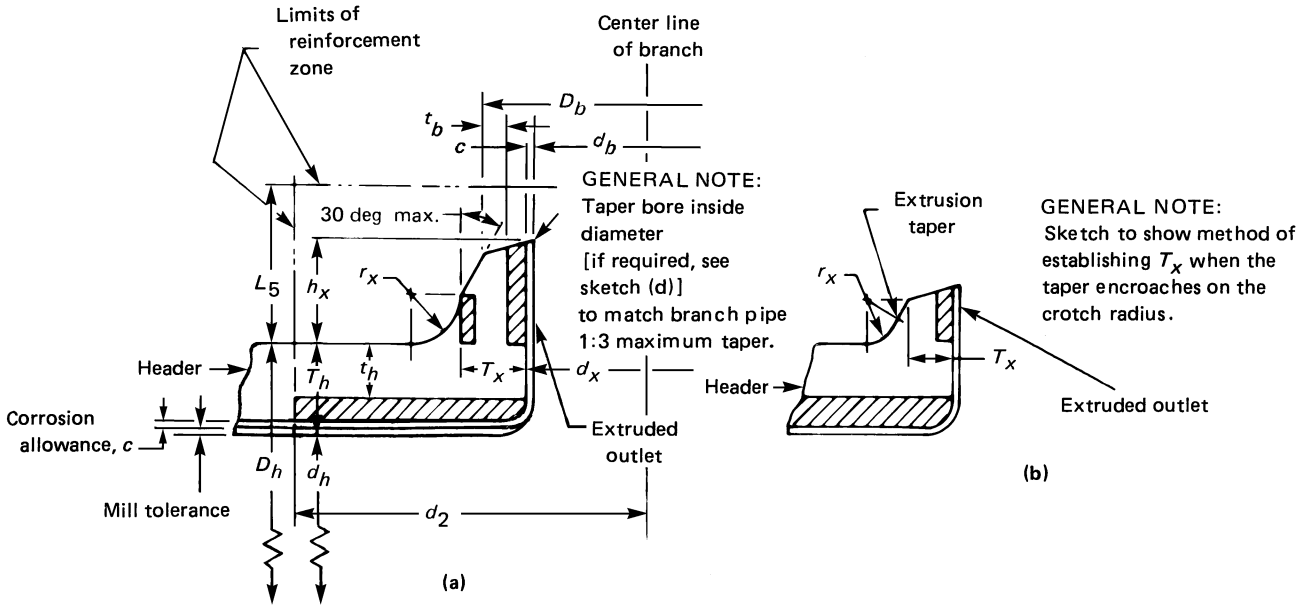

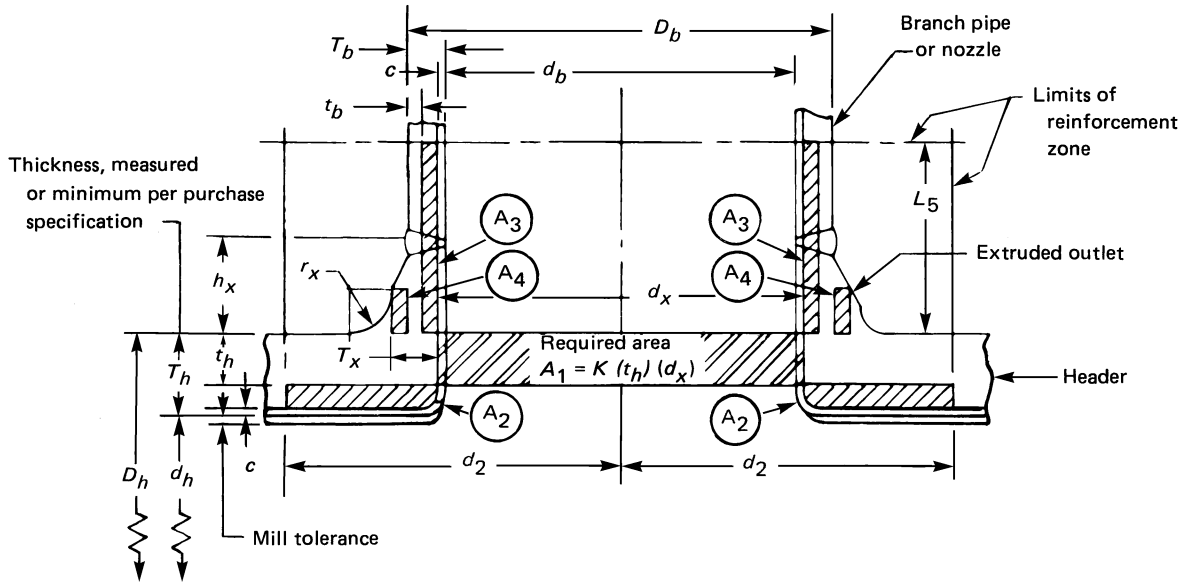

GENERAL NOTE: Sketch is drawn for condition where $K = 1.00$.

(c)

Copyright © 2015 by the American Society of Mechanical Engineers.
No reproduction may be made of this material without written consent of ASME.

Fig. 304.3.4 Extruded Outlet Header Nomenclature (Cont'd)

This Figure illustrates the nomenclature of para. 304.3.4. It does not indicate complete details or a preferred method of construction.

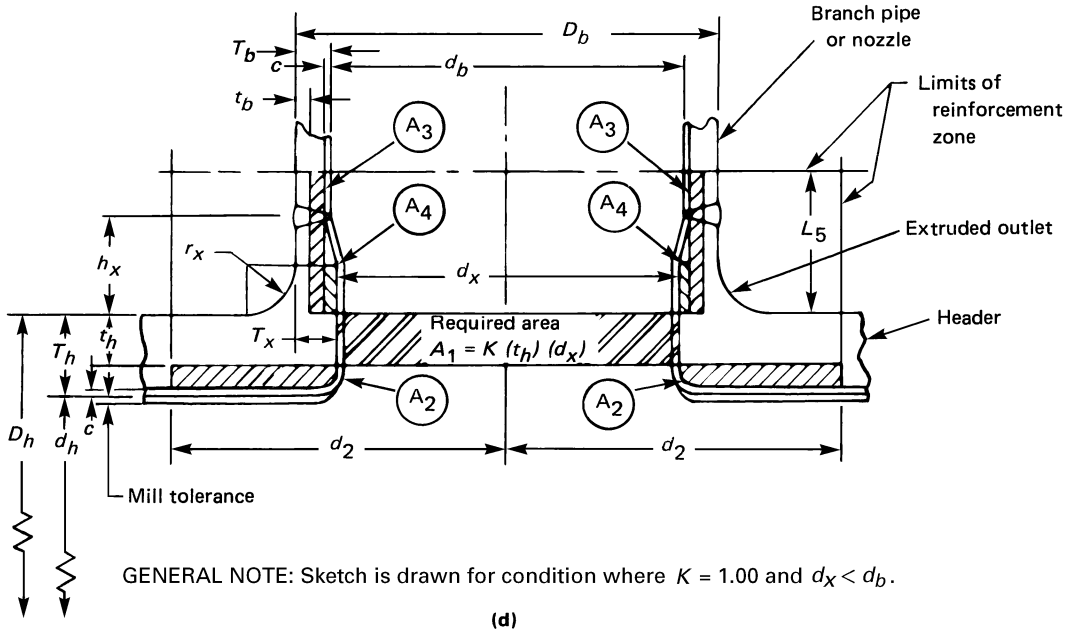

(d)

connection subject only to pressure. The designer shall also consider the following:

(a) In addition to pressure loadings, external forces and movements are applied to a branch connection by thermal expansion and contraction, dead and live loads, and movement of piping terminals and supports. Special consideration shall be given to the design of a branch connection to withstand these forces and movements.

(b) Branch connections made by welding the branch pipe directly to the run pipe should be avoided under the following circumstances:

(1) when branch size approaches run size, particularly if pipe formed by more than 1.5% cold expansion, or expanded pipe of a material subject to work hardening, is used as the run pipe

(2) where repetitive stresses may be imposed on the connection by vibration, pulsating pressure, temperature cycling, etc.

In such cases, it is recommended that the design be conservative and that consideration be given to the use of tee fittings or complete encirclement types of reinforcement.

(c) Adequate flexibility shall be provided in a small line that branches from a large run, to accommodate thermal expansion and other movements of the larger line (see para. 319.6).

(d) If ribs, gussets, or clamps are used to stiffen the branch connection, their areas cannot be counted as contributing to the reinforcement area determined in para. 304.3.3(c) or 304.3.4(f). However, ribs or gussets may be used for pressure-strengthening a branch connection in lieu of reinforcement covered in paras. 304.3.3 and 304.3.4 if the design is qualified as required by para. 304.7.2.

(e) For branch connections that do not meet the requirements of para. 304.3.1(b), integral reinforcement, complete encirclement reinforcement, or other means of reinforcement should be considered.

304.3.6 Branch Connections Under External Pressure. Pressure design for a branch connection subjected to external pressure may be determined in accordance with para. 304.3.1, using the reinforcement area requirement stated in para. 304.3.3(b).

304.4 Closures

304.4.1 General

(a) Closures not in accordance with para. 303 or 304.4.1(b) shall be qualified as required by para. 304.7.2.

(b) For materials and design conditions covered therein, closures may be designed in accordance with the rules in the BPV Code, Section VIII, Division 1, calculated from eq. (13)

$$t_m = t + c \tag{13}$$

where

c = sum of allowances defined in para. 304.1.1

Copyright © 2015 by the American Society of Mechanical Engineers.
No reproduction may be made of this material without written consent of ASME.

Table 304.4.1 BPV Code References for Closures

Type of Closure	Concave to Pressure	Convex to Pressure
Ellipsoidal	UG-32(d)	UG-33(d)
Torispherical	UG-32(e)	UG-33(e)
Hemispherical	UG-32(f)	UG-33(c)
Conical (no transition to knuckle)	UG-32(g)	UG-33(f)
Toriconical	UG-32(h)	UG-33(f)
Flat (pressure on either side)	UG-34	

GENERAL NOTE: Paragraph numbers are from the BPV Code, Section VIII, Division 1.

t = pressure design thickness, calculated for the type of closure and direction of loading, shown in Table 304.4.1, except that the symbols used to determine t shall be as follows:
E = same as defined in para. 304.1.1
P = design gage pressure
S = S times W, with S and W as defined in para. 304.1.1

t_m = minimum required thickness, including mechanical, corrosion, and erosion allowance

304.4.2 Openings in Closures

(a) The rules in paras. 304.4.2(b) through (g) apply to openings not larger than one-half the inside diameter of the closure as defined in Section VIII, Division 1, UG-36. A closure with a larger opening should be designed as a reducer in accordance with para. 304.6 or, if the closure is flat, as a flange in accordance with para. 304.5.

(b) A closure is weakened by an opening and, unless the thickness of the closure is sufficiently in excess of that required to sustain pressure, it is necessary to provide added reinforcement. The need for and amount of reinforcement required shall be determined in accordance with the subparagraphs below except that it shall be considered that the opening has adequate reinforcement if the outlet connection meets the requirements in para. 304.3.2(b) or (c).

(c) Reinforcement for an opening in a closure shall be so distributed that reinforcement area on each side of an opening (considering any plane through the center of the opening normal to the surface of the closure) will equal at least one-half the required area in that plane.

(d) The total cross-sectional area required for reinforcement in any given plane passing through the center of the opening shall not be less than that defined in UG-37(b), UG-38, and UG-39.

(e) The reinforcement area and reinforcement zone shall be calculated in accordance with para. 304.3.3 or 304.3.4, considering the subscript h and other references to the run or header pipe as applying to the closure. Where the closure is curved, the boundaries of the reinforcement zone shall follow the contour of the closure, and dimensions of the reinforcement zone shall be measured parallel to and perpendicular to the closure surface.

(f) If two or more openings are to be located in a closure, the rules in paras. 304.3.3 and 304.3.4 for the reinforcement of multiple openings apply.

(g) The additional design considerations for branch connections discussed in para. 304.3.5 apply equally to openings in closures.

304.5 Pressure Design of Flanges and Blanks

304.5.1 Flanges — General

(a) Flanges not in accordance with para. 303, or 304.5.1(b) or (d), shall be qualified as required by para. 304.7.2.

(b) A flange may be designed in accordance with the BPV Code, Section VIII, Division 1, Appendix 2, using the allowable stresses and temperature limits of the B31.3 Code. Nomenclature shall be as defined in Appendix 2, except as follows:

P = design gage pressure
S_a = bolt design stress at atmospheric temperature
S_b = bolt design stress at design temperature
S_f = product SEW [of the stress value S, the appropriate quality factor E from Table A-1A or A-1B, and weld joint strength reduction factor in accordance with para. 302.3.5(e)] for flange or pipe material. See para. 302.3.2(e).

(c) The rules in (b) above are not applicable to a flanged joint having a gasket that extends outside the bolts (usually to the outside diameter of the flange).

(d) For flanges that make solid contact outside the bolts, Section VIII, Division 1, Appendix Y should be used.

(e) See Section VIII, Division 1, Appendix S, for considerations applicable to bolted joint assembly.

304.5.2 Blind Flanges

(a) Blind flanges not in accordance with para. 303 or 304.5.2(b) shall be qualified as required by para. 304.7.2.

(b) A blind flange may be designed in accordance with eq. (14). The minimum thickness, considering the manufacturer's minus tolerance, shall be not less than t_m

$$t_m = t + c \tag{14}$$

To calculate t, the rules of Section VIII, Division 1, UG-34 may be used with the following changes in nomenclature:

c = sum of allowances defined in para. 304.1.1
P = internal or external design gage pressure
S_f = product SEW [of the stress value, S, and the appropriate quality factor, E, from Table A-1A or A-1B and weld joint strength reduction factor

Copyright © 2015 by the American Society of Mechanical Engineers.
No reproduction may be made of this material without written consent of ASME.

Fig. 304.5.3 Blanks

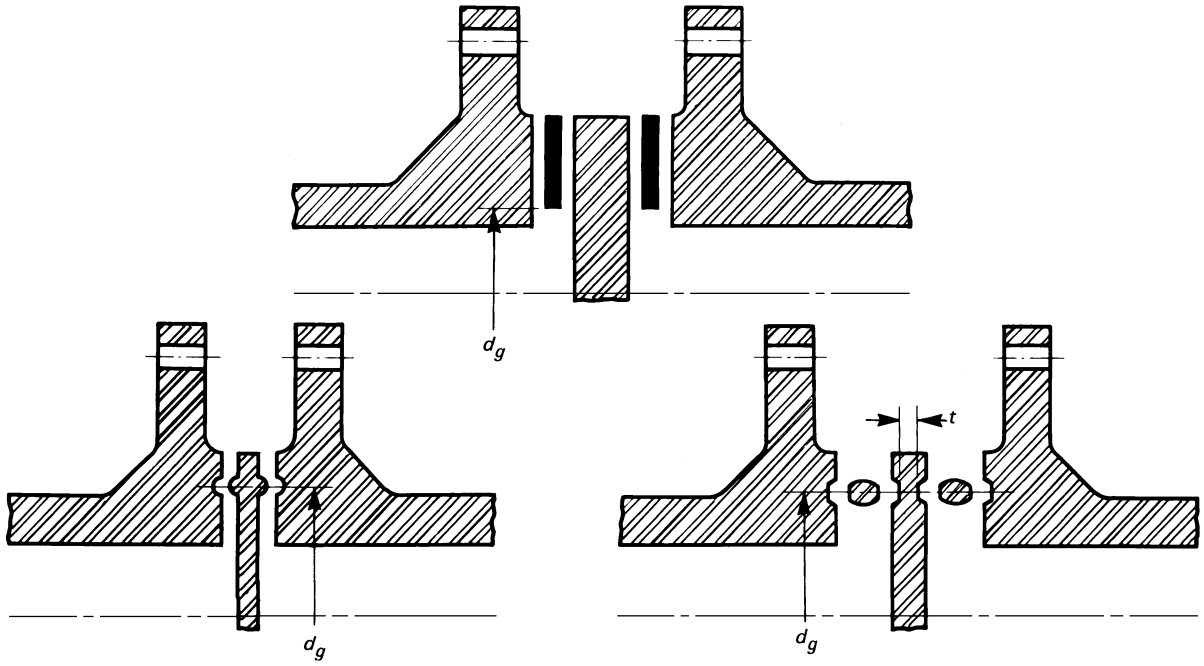

per para. 302.3.5(e)] for flange material. See para. 302.3.2(e).

t = pressure design thickness, as calculated for the given styles of blind flange, using the appropriate equations for bolted flat cover plates in UG-34

304.5.3 Blanks

(a) Blanks not in accordance with para. 303 or 304.5.3(b) shall be qualified as required by para. 304.7.2.

(b) The minimum required thickness of a permanent blank (representative configurations shown in Fig. 304.5.3) shall be calculated in accordance with eq. (15)

$$t_m = d_g \sqrt{\frac{3P}{16SEW}} + c \qquad (15)$$

where

c = sum of allowances defined in para. 304.1.1

d_g = inside diameter of gasket for raised or flat face flanges, or the gasket pitch diameter for ring joint and fully retained gasketed flanges

E = same as defined in para. 304.1.1

P = design gage pressure

S = same as defined in para. 304.1.1

W = same as defined in para. 304.1.1

304.6 Reducers

304.6.1 Concentric Reducers

(a) Concentric reducers not in accordance with para. 303 or 304.6.1(b) shall be qualified as required by para. 304.7.2.

(b) Concentric reducers made in a conical or reversed curve section, or a combination of such sections, may be designed in accordance with the rules for conical and toriconical closures stated in para. 304.4.1.

304.6.2 Eccentric Reducers. Eccentric reducers not in accordance with para. 303 shall be qualified as required by para. 304.7.2.

304.7 Pressure Design of Other Components

304.7.1 Listed Components. Other pressure-containing components manufactured in accordance with standards in Table 326.1 may be utilized in accordance with para. 303.

304.7.2 Unlisted Components. Pressure design of unlisted components to which the rules elsewhere in para. 304 do not apply shall be based on the pressure design criteria of this Code. The designer shall ensure that the pressure design has been substantiated through one or more of the means stated in subparas. (a) through (d) below. Note that designs are also required to be checked for adequacy of mechanical strength as described in para. 302.5. Documentation showing compliance with this paragraph shall be available for the owner's approval. **(14)**

(a) extensive, successful service experience under comparable conditions with similarly proportioned components of the same or like material.

(b) experimental stress analysis, such as described in the BPV Code, Section VIII, Division 2, Annex 5.F.

Copyright © 2015 by the American Society of Mechanical Engineers.
No reproduction may be made of this material without written consent of ASME.

(c) proof test in accordance with ASME B16.9, MSS SP-97, or Section VIII, Division 1, UG-101.

(d) detailed stress analysis (e.g., finite element method) with results evaluated as described in Section VIII, Division 2, Part 5. The basic allowable stress from Table A-1 shall be used in place of the allowable stress, S, in Division 2 where applicable. At design temperatures in the creep range, additional considerations beyond the scope of Division 2 may be necessary.

(e) For any of the above, the designer may interpolate between sizes, wall thicknesses, and pressure classes, and may determine analogies among related materials.

304.7.3 Metallic Components With Nonmetallic Pressure Parts. Components not covered by standards listed in Table 326.1, in which both metallic and nonmetallic parts contain the pressure, shall be evaluated by applicable requirements of para. A304.7.2 as well as those of para. 304.7.2.

304.7.4 Expansion Joints

(a) Metallic Bellows Expansion Joints. The design of bellows type expansion joints shall be in accordance with Appendix X. See also Appendix F, para. F304.7.4 for further design considerations.

(b) Slip Type Expansion Joints

(1) Pressure-containing elements shall be in accordance with para. 318 and other applicable requirements of this Code.

(2) External piping loads shall not impose excessive bending on the joint.

(3) The effective pressure thrust area shall be computed using the outside diameter of the pipe.

(c) Other Types of Expansion Joint. The design of other types of expansion joint shall be qualified as required by para. 304.7.2.

PART 3
FLUID SERVICE REQUIREMENTS FOR PIPING COMPONENTS

305 PIPE

Pipe includes components designated as "tube" or "tubing" in the material specification, when intended for pressure service.

305.1 General

Listed pipe may be used in Normal Fluid Service except as stated in paras. 305.2.1 and 305.2.2. Unlisted pipe may be used only as provided in para. 302.2.3.

305.2 Specific Requirements

305.2.1 Pipe for Category D Fluid Service. The following carbon steel pipe may be used only for Category D Fluid Service:

API 5L, Furnace Butt-Welded
ASTM A53, Type F
ASTM A134 made from other than ASTM A285 plate

305.2.2 Pipe Requiring Safeguarding. When used for other than Category D Fluid Service, the following carbon steel pipe shall be safeguarded:

ASTM A134 made from ASTM A285 plate
ASTM A139

305.2.3 Pipe for Severe Cyclic Conditions (14)

(a) Except as limited in subparas. (b) through (d), only the following pipe may be used under severe cyclic conditions:

(1) pipe listed in Table A-1A, where $E_c \geq 0.90$,[7] or

(2) pipe listed in Table A-1B, where $E_j \geq 0.90$[7]

(b) For API 5L pipe, only the following materials may be used:

Grade A or B, seamless
Grade A or B, SAW, str. seam, $E_j \geq 0.95$
Grade X42, seamless
Grade X46, seamless
Grade X52, seamless
Grade X56, seamless
Grade X60, seamless

(c) For copper pipe, only ASTM B42 may be used.

(d) For copper alloy pipe, only ASTM B466 may be used.

(e) For aluminum alloy pipe, only ASTM B210 and B241, both in tempers O and H112, may be used.

305.2.4 Elevated Temperature Fluid Service. In Elevated Temperature Fluid Service, all longitudinal or spiral (helical seam) welds in P-No. 4 or P-No. 5 materials shall be examined by 100% radiography or 100% ultrasonic examination. Acceptance criteria are as stated in para. 341.3.2 and in Table 341.3.2, for Normal Fluid Service, unless otherwise specified.

306 FITTINGS, BENDS, MITERS, LAPS, AND BRANCH CONNECTIONS

Fittings, bends, miters, laps, and branch connections may be used in accordance with paras. 306.1 through 306.5. Pipe and other materials used in such components shall be suitable for the manufacturing or fabrication process and the fluid service.

306.1 Pipe Fittings

306.1.1 Listed Fittings. Listed fittings may be used in Normal Fluid Service in accordance with para. 303.

306.1.2 Unlisted Fittings. Unlisted fittings may be used only in accordance with para. 302.2.3.

306.1.3 Specific Fittings

(a) Proprietary welding branch outlet fittings that have been design proof tested successfully as prescribed

[7] See paras. 302.3.3 and 302.3.4.

Copyright © 2015 by the American Society of Mechanical Engineers.
No reproduction may be made of this material without written consent of ASME.

in ASME B16.9, MSS SP-97, or the BPV Code, Section VIII, Division 1, UG-101 may be used within their established ratings.

(b) The lap thickness of a proprietary "Type C" lap-joint stub-end buttwelding fitting shall conform to the requirements of para. 306.4.2 for flared laps.

306.1.4 Fittings for Severe Cyclic Conditions

(a) Only the following fittings may be used under severe cyclic conditions:

(1) forged

(2) wrought, with factor $E_j \geq 0.90$,[7] or

(3) cast, with factor $E_c \geq 0.90$[7]

(b) Fittings conforming to MSS SP-43, MSS SP-119, and proprietary "Type C" lap-joint stub-end welding fittings shall not be used under severe cyclic conditions.

306.2 Pipe Bends

306.2.1 General

(a) A pipe bend made in accordance with paras. 332.2.1 and 332.2.2, and verified for pressure design in accordance with para. 304.2.1, is suitable for the same service as the pipe from which it is made.

(b) A pipe bend made in accordance with para. 332.2.2, but not meeting the flattening limits of para. 332.2.1, may be qualified for pressure design by para. 304.7.2 and shall not exceed the rating of the straight pipe from which it is made.

306.2.2 Corrugated and Other Bends. Bends of other designs (such as creased or corrugated) shall be qualified for pressure design as required by para. 304.7.2.

306.2.3 Bends for Severe Cyclic Conditions. A pipe bend designed as creased or corrugated shall not be used under severe cyclic conditions.

306.3 Miter Bends

306.3.1 General. Except as stated in para. 306.3.2, a miter bend made in accordance with para. 304.2.3 and welded in accordance with para. 311.1 is suitable for use in Normal Fluid Service.

306.3.2 Miter Bends for Category D Fluid Service. A miter bend that makes a change in direction at a single joint (angle α in Fig. 304.2.3) greater than 45 deg, or is welded in accordance with para. 311.2.1, may be used only for Category D Fluid Service.

306.3.3 Miter Bends for Severe Cyclic Conditions. A miter bend to be used under severe cyclic conditions shall be made in accordance with para. 304.2.3 and welded in accordance with para. 311.2.2, and shall have an angle α (see Fig. 304.2.3) $\leq$ 22.5 deg.

306.4 Laps

The following requirements do not apply to fittings conforming to para. 306.1, specifically lap-joint stub ends conforming to ASME B16.9, nor to laps integrally hot-forged on pipe ends, except as noted in paras. 306.4.3 and 306.4.4(a).

306.4.1 Fabricated Laps. A fabricated lap is suitable for use in Normal Fluid Service, provided that all of the following requirements are met.

(a) The outside diameter of the lap shall be within the dimensional tolerances of the corresponding ASME B16.9 lap-joint stub end.

(b) The lap thickness shall be at least equal to the nominal wall thickness of the pipe to which it is attached.

(c) The lap material shall have an allowable stress at least as great as that of the pipe.

(d) Welding shall be in accordance with para. 311.1 and fabrication shall be in accordance with para. 328.5.5.

306.4.2 Flared Laps. See para. 308.2.5 for requirements of lapped flanges for use with flared laps. A flared lap is suitable for use in Normal Fluid Service, provided that all of the following requirements are met.

(a) The pipe used shall be of a specification and grade suitable for forming without cracks, surface buckling, or other defects.

(b) The outside diameter of the lap shall be within the dimensional tolerances of the corresponding ASME B16.9 lap-joint stub end.

(c) The radius of fillet shall not exceed 3 mm ($\frac{1}{8}$ in.).

(d) The lap thickness at any point shall be at least 95% of the minimum pipe wall thickness, T, multiplied by the ratio of the pipe outside diameter to the diameter at which the lap thickness is measured.

(e) Pressure design shall be qualified as required by para. 304.7.2.

306.4.3 Forged Laps. A lap integrally hot-forged on a pipe end is suitable for Normal Fluid Service only when the requirements of para. 332 are met. Its dimensions shall conform to those for lap-joint stub ends given in ASME B16.9.

306.4.4 Laps for Severe Cyclic Conditions

(a) A forged lap-joint stub end in accordance with para. 306.1 or a lap integrally hot-forged on a pipe end in accordance with para. 306.4.3 may be used under severe cyclic conditions.

(b) A fabricated lap to be used under severe cyclic conditions shall conform to the requirements of para. 306.4.1, except that welding shall be in accordance with para. 311.2.2. A fabricated lap shall conform to a detail shown in Fig. 328.5.5, sketch (d) or (e).

(c) A flared lap is not permitted under severe cyclic conditions.

306.5 Fabricated Branch Connections

The following requirements do not apply to fittings conforming to para. 306.1.

Copyright © 2015 by the American Society of Mechanical Engineers.
No reproduction may be made of this material without written consent of ASME.

306.5.1 General. A fabricated branch connection made and verified for pressure design in accordance with para. 304.3, and welded in accordance with para. 311.1, is suitable for use in Normal Fluid Service.

306.5.2 Fabricated Branch Connections for Severe Cyclic Conditions. A fabricated branch connection to be used under severe cyclic conditions shall conform to the requirements of para. 306.5.1, except that welding shall be in accordance with para. 311.2.2, with fabrication limited to a detail equivalent to Fig. 328.5.4D sketch (2) or (4), or to Fig. 328.5.4E.

(14) **306.6 Thermowells**

Thermowells shall comply with ASME PTC 19.3 TW where applicable.

307 VALVES AND SPECIALTY COMPONENTS

The following requirements for valves shall also be met as applicable by other pressure-containing piping components, such as traps, strainers, and separators. See also Appendix F, paras. F301.4 and F307.

307.1 General

307.1.1 Listed Valves. A listed valve is suitable for use in Normal Fluid Service, except as stated in para. 307.2.

307.1.2 Unlisted Valves. Unlisted valves may be used only in accordance with para. 302.2.3. Unless pressure–temperature ratings are established by the method set forth in ASME B16.34, pressure design shall be qualified as required by para. 304.7.2.

307.2 Specific Requirements

307.2.1 Bonnet Bolting. A bolted bonnet valve whose bonnet is secured to the body by less than four bolts, or by a U-bolt, may be used only for Category D Fluid Service.

307.2.2 Stem Retention. Valves shall be designed so that the stem seal retaining fasteners (e.g., packing, gland fasteners) alone do not retain the stem. Specifically, the design shall be such that the stem shall not be capable of removal from the valve, while the valve is under pressure, by the removal of the stem seal retainer (e.g., gland) alone.

308 FLANGES, BLANKS, FLANGE FACINGS, AND GASKETS

308.1 General

308.1.1 Listed Components. A listed flange, blank, or gasket is suitable for use in Normal Fluid Service, except as stated elsewhere in para. 308.

Table 308.2.1 Permissible Sizes/Rating Classes for Slip-On Flanges Used as Lapped Flanges

	Maximum Flange Size	
Rating Class	DN	NPS
150	300	12
300	200	8

GENERAL NOTE: Actual thickness of flange at bolt circle shall at least equal minimum required flange thickness in ASME B16.5.

308.1.2 Unlisted Components. Unlisted flanges, blanks, and gaskets may be used only in accordance with para. 302.2.3.

308.2 Specific Requirements for Flanges

See Appendix F, paras. F308.2 and F312.

308.2.1 Slip-On Flanges

(a) A slip-on flange shall be double-welded as shown in Fig. 328.5.2B when the service is

(1) subject to severe erosion, crevice corrosion, or cyclic loading

(2) flammable, toxic, or damaging to human tissue

(3) under severe cyclic conditions

(4) at temperatures below −101°C (−150°F)

(b) The use of slip-on flanges should be avoided where many large temperature cycles are expected, particularly if the flanges are not insulated.

(c) Slip-on Flanges as Lapped Flanges. A slip-on flange may be used as a lapped flange only as shown in Table 308.2.1 unless pressure design is qualified in accordance with para. 304.5.1. A corner radius or bevel shall conform to one of the following as applicable:

(1) For an ASME B16.9 lap joint stub end or a forged lap (see para. 306.4.3) the corner radius shall be as specified in ASME B16.5, Tables 9 and 12, dimension *r*.

(2) For a fabricated lap, the corner bevel shall be at least half the nominal thickness of the pipe to which the lap is attached (see Fig. 328.5.5).

(3) For a flared lap see para. 308.2.5.

308.2.2 Expanded-Joint Flanges. A flange having an expanded-joint insert is subject to the requirements for expanded joints in para. 313.

308.2.3 Socket Welding and Threaded Flanges. A socket welding flange is subject to the requirements for socket welds in para. 311.2.5. A threaded flange is subject to the requirements for threaded joints in para. 314.4.

308.2.4 Flanges for Severe Cyclic Conditions. Unless it is safeguarded, a flange to be used under severe cyclic conditions shall be welding neck conforming to ASME B16.5 or ASME B16.47, or a similarly proportioned flange designed in accordance with para. 304.5.1.

308.2.5 Flanges for Flared Metallic Laps. For a flange used with a flared metallic lap (para. 306.4.2), the

Copyright © 2015 by the American Society of Mechanical Engineers.
No reproduction may be made of this material without written consent of ASME.

intersection of face and bore shall be beveled or rounded approximately 3 mm (⅛ in.). See also para. 308.2.1(c).

308.3 Flange Facings

The flange facing shall be suitable for the intended service and for the gasket and bolting employed.

308.4 Gaskets

Gaskets shall be selected so that the required seating load is compatible with the flange rating and facing, the strength of the flange, and its bolting. Materials shall be suitable for the service conditions. See also Appendix F, para. F308.4.

309 BOLTING

Bolting includes bolts, bolt studs, studs, cap screws, nuts, and washers. See also Appendix F, para. F309.

309.1 General

309.1.1 Listed Bolting. Listed bolting is suitable for use in Normal Fluid Service, except as stated elsewhere in para. 309.

309.1.2 Unlisted Bolting. Unlisted bolting may be used only in accordance with para. 302.2.3.

309.1.3 Bolting for Components. Bolting for components conforming to a listed standard shall be in accordance with that standard if specified therein.

309.1.4 Selection Criteria. Bolting selected shall be adequate to seat the gasket and maintain joint tightness under all design conditions.

309.2 Specific Bolting

309.2.1 Low Yield Strength Bolting. Bolting having not more than 207 MPa (30 ksi) specified minimum yield strength shall not be used for flanged joints rated ASME B16.5 Class 400 and higher, nor for flanged joints using metallic gaskets, unless calculations have been made showing adequate strength to maintain joint tightness.

309.2.2 Carbon Steel Bolting. Except where limited by other provisions of this Code, carbon steel bolting may be used with nonmetallic gaskets in flanged joints rated ASME B16.5 Class 300 and lower for bolt metal temperatures at −29°C to 204°C (−20°F to 400°F), inclusive. If these bolts are galvanized, heavy hexagon nuts, threaded to suit, shall be used.

309.2.3 Bolting for Metallic Flange Combinations. Any bolting that meets the requirements of para. 309 may be used with any combination of flange material and facing. If either flange is to the ASME B16.1, ASME B16.24, MSS SP-42, or MSS SP-51 specification, the bolting material shall be no stronger than low yield strength bolting unless

(a) both flanges have flat faces and a full face gasket is used, or

(b) sequence and torque limits for bolt-up are specified, with consideration of sustained loads, displacement strains, occasional loads (see paras. 302.3.5 and 302.3.6), and strength of the flanges

309.2.4 Bolting for Severe Cyclic Conditions. Low yield strength bolting (see para. 309.2.1) shall not be used for flanged joints under severe cyclic conditions.

309.3 Tapped Holes

Tapped holes for pressure-retaining bolting in metallic piping components shall be of sufficient depth that the thread engagement will be at least seven-eighths times the nominal thread diameter.

PART 4
FLUID SERVICE REQUIREMENTS FOR PIPING JOINTS

310 GENERAL

Piping joints shall be selected to suit the piping material and the fluid service, with consideration of joint tightness and mechanical strength under expected service and test conditions of pressure, temperature, and external loading.

311 WELDED JOINTS

Joints may be made by welding in any material for which it is possible to qualify welding procedures, welders, and welding operators in conformance with the rules in Chapter V.

311.1 General

Except as provided in paras. 311.2.1 and 311.2.2, welds shall conform to the following:

(a) Welding shall be in accordance with para. 328.

(b) Preheating and heat treatment shall be in accordance with paras. 330 and 331, respectively.

(c) Examination shall be in accordance with para. 341.4.1.

(d) Acceptance criteria shall be those in Table 341.3.2 for Normal Fluid Service.

311.2 Specific Requirements

311.2.1 Welds for Category D Fluid Service. Welds that meet the requirements of para. 311.1, but for which examination is in accordance with para. 341.4.2, and acceptance criteria are those in Table 341.3.2 for Category D Fluid Service, may be used only in that service.

311.2.2 Welds for Severe Cyclic Conditions. Welds for use under severe cyclic conditions shall meet the requirements of para. 311.1 with the exceptions that

Copyright © 2015 by the American Society of Mechanical Engineers.
No reproduction may be made of this material without written consent of ASME.

examination shall be in accordance with para. 341.4.3, and acceptance criteria shall be those in Table 341.3.2 for severe cyclic conditions.

311.2.3 Welds for Elevated Temperature Fluid Service. Weld joints for Elevated Temperature Fluid Service shall meet the requirements for Normal Fluid Service, unless otherwise specified.

311.2.4 Backing Rings and Consumable Inserts

(a) If a backing ring is used where the resulting crevice is detrimental (e.g., subject to corrosion, vibration, or severe cyclic conditions), it should be removed and the internal joint face ground smooth. When it is impractical to remove the backing ring in such a case, consideration shall be given to welding without backing rings or to the use of consumable inserts or removable nonmetallic backing rings.

(b) Split backing rings shall not be used under severe cyclic conditions.

311.2.5 Socket Welds

(a) Socket welded joints (para. 328.5.2) should be avoided in any service where crevice corrosion or severe erosion may occur.

(b) Socket welded joints shall conform to the following:

(1) Socket dimensions shall conform to ASME B16.5 for flanges and ASME B16.11 or MSS SP-119 for other socket-welding components.

(2) Weld dimensions shall not be less than those shown in Figs. 328.5.2B and 328.5.2C.

(c) Socket welds larger than DN 50 (NPS 2) shall not be used under severe cyclic conditions.

(d) A drain or bypass in a component may be attached by socket welding, provided the socket dimensions conform to Fig. 4 in ASME B16.5.

311.2.6 Fillet Welds

(a) Fillet welds in accordance with para. 328.5.2 may be used as primary welds to attach socket welding components and slip-on flanges.

(b) Fillet welds may also be used to attach reinforcement and structural attachments, to supplement the strength or reduce stress concentration of primary welds, and to prevent disassembly of joints.

311.2.7 Seal Welds. Seal welds (para. 328.5.3) may be used only to prevent leakage of threaded joints and shall not be considered as contributing any strength to the joints.

312 FLANGED JOINTS

312.1 Joints Using Flanges of Different Ratings

Where flanges of different ratings are bolted together, the rating of the joint shall not exceed that of the lower rated flange. Bolting torque shall be limited so that excessive loads will not be imposed on the lower rated flange in obtaining a tight joint.

312.2 Metal to Nonmetal Flanged Joints

Where a metallic flange is bolted to a nonmetallic flange, both should be flat-faced. A full-faced gasket is preferred. If a gasket extending only to the inner edge of the bolts is used, bolting torque shall be limited so that the nonmetallic flange is not overloaded.

313 EXPANDED JOINTS

(a) Expanded joints shall not be used under severe cyclic conditions. For other services, adequate means shall be provided to prevent separation of the joint. If the fluid is toxic or damaging to human tissue, safeguarding is required.

(b) Consideration shall be given to the tightness of expanded joints when subjected to vibration, differential expansion or contraction due to temperature cycling, or external mechanical loads.

314 THREADED JOINTS

314.1 General

Threaded joints are suitable for Normal Fluid Service except as stated elsewhere in para. 314. They may be used under severe cyclic conditions only as provided in paras. 314.2.1(c) and 314.2.2.

(a) Threaded joints should be avoided in any service where crevice corrosion, severe erosion, or cyclic loading may occur.

(b) When threaded joints are intended to be seal welded, thread sealing compound shall not be used.

(c) Layout of piping employing threaded joints should, insofar as possible, minimize stress on joints, giving special consideration to stresses due to thermal expansion and operation of valves (particularly a valve at a free end). Provision should be made to counteract forces that would tend to unscrew the joints.

(d) Except for specially designed joints employing lens rings or similar gaskets, threaded flanges in which the pipe ends project through to serve as the gasket surface may be used only for Category D Fluid Service.

314.2 Specific Requirements

314.2.1 Taper-Threaded Joints. Requirements in (a) through (c) below apply to joints in which the threads of both mating components conform to ASME B1.20.1.

(a) External threaded components may be used in accordance with Table 314.2.1 and its Notes.

(b) Internal threaded components shall be at least equivalent in strength and toughness to threaded components listed in Table 326.1 and otherwise suitable for the service.

Copyright © 2015 by the American Society of Mechanical Engineers.
No reproduction may be made of this material without written consent of ASME.

Table 314.2.1 Minimum Thickness of External Threaded Components

Fluid Service	Notch-Sensitive Material	Size Range [Note (1)] DN	Size Range [Note (1)] NPS	Min. Wall Thickness [Note (2)]
Normal	Yes [Note (3)]	≤ 40	≤ 1½	Sch. 80
		50	2	Sch. 40
		65–150	2½–6	Sch. 40
Normal	No [Note (4)]	≤ 50	≤ 2	Sch. 40S
		65–150	2½–6	Sch. 40S
Category D	Either	≤ 300	≤ 12	In accordance with para. 304.1.1

GENERAL NOTE: Use the greater of para. 304.1.1 or thickness shown in this Table.

NOTES:

(1) For sizes > DN 50 (NPS 2), the joint shall be safeguarded (see Appendix G) for a fluid service that is flammable, toxic, or damaging to human tissue.

(2) Nominal wall thicknesses is listed for Sch. 40 and 80 in ASME B36.10M and for Sch. 40S in ASME B36.19M.

(3) For example, carbon steel.

(4) For example, austenitic stainless steel.

(c) Threaded components of a specialty nature that are not subject to external moment loading, such as thermometer wells, may be used under severe cyclic conditions.

(d) A coupling having straight threads may be used only for Category D Fluid Service, and only with taper-threaded mating components.

314.2.2 Straight-Threaded Joints. Threaded joints in which the tightness of the joint is provided by a seating surface other than the threads (e.g., a union comprising male and female ends joined with a threaded union nut, or other constructions shown typically in Fig. 335.3.3) may be used. If such joints are used under severe cyclic conditions and are subject to external moment loadings, safeguarding is required.

315 TUBING JOINTS

315.1 General

In selecting and applying flared, flareless, and compression type tubing fittings, the designer shall consider the possible adverse effects on the joints of such factors as assembly and disassembly, cyclic loading, vibration, shock, and thermal expansion and contraction.

315.2 Joints Conforming to Listed Standards

Joints using flared, flareless, or compression type tubing fittings covered by listed standards may be used in Normal Fluid Service provided that

(a) the fittings and joints are suitable for the tubing with which they are to be used (considering maximum and minimum wall thickness) and are used within the pressure–temperature limitations of the fitting and the joint

(b) the joints are safeguarded when used under severe cyclic conditions

315.3 Joints Not Conforming to Listed Standards

Joints using flared, flareless, or compression type tubing fittings not listed in Table 326.1 may be used in accordance with para. 315.2 provided that the type of fitting selected is also adequate for pressure and other loadings. The design shall be qualified as required by para. 304.7.2.

316 CAULKED JOINTS

Caulked joints such as bell type joints shall be limited to Category D Fluid Service and to a temperature not over 93°C (200°F). They shall be used within the pressure–temperature limitations of the joint and pipe. Provisions shall be made to prevent disengagement of joints, to prevent buckling of the piping, and to sustain lateral reactions produced by branch connections or other causes.

317 SOLDERED AND BRAZED JOINTS

317.1 Soldered Joints

Soldered joints shall be made in accordance with the provisions of para. 333 and may be used only in Category D fluid service. Fillet joints made with solder metal are not permitted. The low melting point of solder shall be considered where possible exposure to fire or elevated temperature is involved.

317.2 Brazed and Braze Welded Joints

(a) Brazed and braze welded joints made in accordance with the provisions in para. 333 are suitable for Normal Fluid Service. They shall be safeguarded in fluid services that are flammable, toxic, or damaging to human tissue. They shall not be used under severe cyclic conditions. The melting point of brazing alloys shall be considered where possible exposure to fire is involved.

(b) Fillet joints made with brazing filler metal are not permitted.

318 SPECIAL JOINTS

Special joints are those not covered elsewhere in Chapter II, Part 4, such as bell type and packed gland type joints.

318.1 General

318.1.1 Listed Joints. Joints using listed components are suitable for Normal Fluid Service.

Copyright © 2015 by the American Society of Mechanical Engineers.
No reproduction may be made of this material without written consent of ASME.

318.1.2 Unlisted Joints. For joints that utilize unlisted components, pressure design shall be qualified as required by para. 304.7.2.

318.2 Specific Requirements

318.2.1 Joint Integrity. Separation of the joint shall be prevented by a means that has sufficient strength to withstand anticipated conditions of service.

318.2.2 Joint Interlocks. Either mechanical or welded interlocks shall be provided to prevent separation of any joint used for a fluid service that is flammable, toxic, or damaging to human tissues, of any joint to be used under severe cyclic conditions, and of any joint exposed to temperatures in the creep range.

318.2.3 Bell and Gland Type Joints. If not covered in para. 316, bell type and gland type joints used under severe cyclic conditions require safeguarding.

PART 5
FLEXIBILITY AND SUPPORT

319 PIPING FLEXIBILITY

319.1 Requirements

319.1.1 Basic Requirements. Piping systems shall have sufficient flexibility to prevent thermal expansion or contraction or movements of piping supports and terminals from causing

(a) failure of piping or supports from overstress or fatigue

(b) leakage at joints

(c) detrimental stresses or distortion in piping and valves or in connected equipment (pumps and turbines, for example), resulting from excessive thrusts and moments in the piping

(14) **319.1.2 Specific Requirements.** In para. 319, concepts, data, and methods are given for determining the requirements for flexibility in a piping system and for assuring that the system meets all of these requirements. In brief, these requirements are that

(a) the computed stress range at any point due to displacements in the system shall not exceed the allowable stress range established in para. 302.3.5

(b) reaction forces computed in para. 319.5 shall not be detrimental to supports or connected equipment

(c) computed movement of the piping shall be within any prescribed limits, and properly accounted for in the flexibility calculations

If it is determined that a piping system does not have adequate inherent flexibility, means for increasing flexibility shall be provided in accordance with para. 319.7.

(14) ### 319.2 Concepts

Concepts characteristic of piping flexibility analysis are covered in the following paragraphs. Special consideration is given to displacements (strains) in the piping system, and to resultant axial, bending, and torsional displacement stress ranges.

319.2.1 Displacement Strains

(a) Thermal Displacements. A piping system will undergo dimensional changes with any change in temperature. If it is constrained from free expansion or contraction by connected equipment and restraints such as guides and anchors, it will be displaced from its unrestrained position.

(b) Restraint Flexibility. If restraints are not considered rigid, their flexibility may be considered in determining displacement stress range and reactions.

(c) Externally Imposed Displacements. Externally caused movement of restraints will impose displacements on the piping in addition to those related to thermal effects. Movements may result from tidal changes (dock piping), wind sway (e.g., piping supported from a tall slender tower), or temperature changes in connected equipment.

Movement due to earth settlement, since it is a single cycle effect, will not significantly influence fatigue life. A displacement stress range greater than that permitted by para. 302.3.5(d) may be allowable if due consideration is given to avoidance of excessive localized strain and end reactions.

(d) Total Displacement Strains. Thermal displacements, reaction displacements, and externally imposed displacements all have equivalent effects on the piping system, and shall be considered together in determining the total displacement strains (proportional deformation) in various parts of the piping system.

319.2.2 Displacement Stresses

(a) Elastic Behavior. Stresses may be considered proportional to the total displacement strains in a piping system in which the strains are well-distributed and not excessive at any point (a balanced system). Layout of systems should aim for such a condition, which is assumed in flexibility analysis methods provided in this Code.

(b) Overstrained Behavior. Stresses cannot be considered proportional to displacement strains throughout a piping system in which an excessive amount of strain may occur in localized portions of the system (an unbalanced system). Operation of an unbalanced system in the creep range may aggravate the deleterious effects due to creep strain accumulation in the most susceptible regions of the system. Unbalance may result from one or more of the following:

(1) highly stressed small size pipe runs in series with large or relatively stiff pipe runs.

(2) a local reduction in size or wall thickness, or local use of material having reduced yield strength (for example, girth welds of substantially lower strength than the base metal).

Copyright © 2015 by the American Society of Mechanical Engineers.
No reproduction may be made of this material without written consent of ASME.

(3) a line configuration in a system of uniform size in which the expansion or contraction must be absorbed largely in a short offset from the major portion of the run.

(4) variation of piping material or temperature in a line. When differences in the elastic modulus within a piping system will significantly affect the stress distribution, the resulting displacement stresses shall be computed based on the actual elastic moduli at the respective operating temperatures for each segment in the system and then multiplied by the ratio of the elastic modulus at ambient temperature to the modulus used in the analysis for each segment.

Unbalance should be avoided or minimized by design and layout of piping systems, particularly those using materials of low ductility. Many of the effects of unbalance can be mitigated by selective use of cold spring. If unbalance cannot be avoided, the designer shall use appropriate analytical methods in accordance with para. 319.4 to assure adequate flexibility as defined in para. 319.1.

(14) **319.2.3 Displacement Stress Range**

(a) In contrast with stresses from sustained loads, such as internal pressure or weight, displacement stresses may be permitted to attain sufficient magnitude to cause local yielding in various portions of a piping system. When the system is initially operated at the condition of greatest displacement (highest or lowest temperature, or greatest imposed movement) from its installed condition, any yielding or creep brings about a reduction or relaxation of stress. When the system is later returned to its original condition (or a condition of opposite displacement), a reversal and redistribution of stresses occurs that is referred to as self-springing. It is similar to cold springing in its effects.

(b) While stresses resulting from displacement strains diminish with time due to yielding or creep, the algebraic difference between strains in the extreme displacement condition and the original (as-installed) condition (or any anticipated condition with a greater differential effect) remains substantially constant during any one cycle of operation. This difference in strains produces a corresponding stress differential, the displacement stress range, that is used as the criterion in the design of piping for flexibility. In evaluating systems where supports may be active in some conditions and not others (e.g., pipes lifting off supports), this difference in strains may be influenced by the changing distribution of sustained load. In such cases, the displacement strain range is based on the algebraic difference between the calculated positions of the pipe that define the range. In addition to the displacement strain, each calculated position shall include the sustained loads present in the condition under evaluation. See para. 302.3.5(d) for the allowable stress range, S_A, and para. 319.4.4(a) for the computed displacement stress range, S_E.

319.2.4 Cold Spring. Cold spring is the intentional deformation of piping during assembly to produce a desired initial displacement and reaction. Cold spring is beneficial in that it serves to balance the magnitude of the reaction under initial and extreme displacement conditions. When cold spring is properly applied there is less likelihood of overstrain during initial operation; hence, it is recommended especially for piping materials of limited ductility. There is also less deviation from as-installed dimensions during initial operation, so that hangers will not be displaced as far from their original settings. (14)

Inasmuch as the service life of a piping system is affected more by the range of stress variation than by the magnitude of stress at a given time, no credit for cold spring is permitted in stress range calculations. However, in calculating the thrusts and moments where actual reactions as well as their range of variations are significant, credit is given for cold spring.

319.3 Properties for Flexibility Analysis

The following paragraphs deal with properties of piping materials and their application in piping flexibility stress analysis.

319.3.1 Thermal Expansion Data

(a) Values for Stress Range. Values of thermal displacements to be used in determining total displacement strains for computing the stress range shall be determined from Appendix C as the algebraic difference between the value at maximum metal temperature and that at the minimum metal temperature for the thermal cycle under analysis.

(b) Values for Reactions. Values of thermal displacements to be used in determining total displacement strains for computation of reactions on supports and connected equipment shall be determined as the algebraic difference between the value at maximum (or minimum) temperature for the thermal cycle under analysis and the value at the temperature expected during installation.

319.3.2 Modulus of Elasticity. The reference modulus of elasticity at 21°C (70°F), E_a, and the modulus of elasticity at maximum or minimum temperature, E_m, shall be taken as the values shown in Appendix C for the temperatures determined in para. 319.3.1(a) or (b). For materials not included in Appendix C, reference shall be made to authoritative source data, such as publications of the National Institute of Standards and Technology.

319.3.3 Poisson's Ratio. Poisson's ratio may be taken as 0.3 at all temperatures for all metals. More accurate and authoritative data may be used if available.

319.3.4 Allowable Stresses

(a) The allowable displacement stress range, S_A, and permissible additive stresses shall be as specified in

Copyright © 2015 by the American Society of Mechanical Engineers.
No reproduction may be made of this material without written consent of ASME.

para. 302.3.5(d) for systems primarily stressed in bending and/or torsion.

(b) The stress intensification factors in Appendix D have been developed from fatigue tests of representative piping components and assemblies manufactured from ductile ferrous materials. The allowable displacement stress range is based on tests of carbon and austenitic stainless steels. Caution should be exercised when using eqs. (1a) and (1b) (para. 302.3.5) for allowable displacement stress range for some nonferrous materials (e.g., certain copper and aluminum alloys) for other than low cycle applications.

319.3.5 Dimensions. Nominal thicknesses and outside diameters of pipe and fittings shall be used in flexibility calculations.

319.3.6 Flexibility and Stress Intensification Factors. The flexibility factors, k, and stress intensification factors, i, shall not be less than unity. In the absence of more directly applicable data, the flexibility factor, k, and stress intensification factor, i, shown in Appendix D shall be used for flexibility calculations described in para. 319.4.

Stress intensification factors may be developed in accordance with ASME B31J.

For piping components or attachments (such as valves, strainers, anchor rings, or bands) not covered in Table D300, suitable stress intensification factors may be assumed by comparison of their significant geometry with that of the components shown. The validity of any assumptions is the responsibility of the designer. If two or more of the geometries shown in Appendix D are combined, their combined k and i might be significantly different from the values shown. Examples include trunnions on elbows and branch connection fittings welded to anything other than straight pipe.

319.4 Flexibility Analysis

319.4.1 Formal Analysis Not Required. No formal analysis of adequate flexibility is required for a piping system that

(a) duplicates, or replaces without significant change, a system operating with a successful service record

(b) can readily be judged adequate by comparison with previously analyzed systems

(c) is of uniform size, has no more than two points of fixation, no intermediate restraints, and falls within the limitations of empirical eq. (16)[8]

$$\frac{Dy}{(L-U)^2} \le K_1 \qquad (16)$$

where

D = outside diameter of pipe, mm (in.)

E_a = reference modulus of elasticity at 21°C (70°F), MPa (ksi)

K_1 = 208 000 S_A/E_a, $(\text{mm/m})^2$

= 30 S_A/E_a, $(\text{in./ft})^2$

L = developed length of piping between anchors, m (ft)

S_A = allowable displacement stress range in accordance with eq. (1a), MPa (ksi)

U = anchor distance, straight line between anchors, m (ft)

y = resultant of total displacement strains, mm (in.), to be absorbed by the piping system

319.4.2 Formal Analysis Requirements

(a) Any piping system that does not meet the criteria in para. 319.4.1 shall be analyzed by a simplified, approximate, or comprehensive method of analysis, as appropriate.

(b) A simplified or approximate method may be applied only if used within the range of configurations for which its adequacy has been demonstrated.

(c) Acceptable comprehensive methods of analysis include analytical and chart methods that provide an evaluation of the forces, moments, and stresses caused by displacement strains (see para. 319.2.1).

(d) Comprehensive analysis shall take into account stress intensification factors for any component other than straight pipe. Credit may be taken for the extra flexibility of such a component.

319.4.3 Basic Assumptions and Requirements. Standard assumptions specified in para. 319.3 shall be followed in all cases. In calculating the flexibility of a piping system between anchor points, the system shall be treated as a whole. The significance of all parts of the line and of all restraints introduced for the purpose of reducing moments and forces on equipment or small branch lines, and also the restraint introduced by support friction, shall be recognized. Consider all displacements, as outlined in para. 319.2.1, over the temperature range defined by para. 319.3.1.

319.4.4 Flexibility Stresses (14)

(a) The axial, bending, and torsional displacement stress ranges shall be computed using the reference modulus of elasticity at 21°C (70°F), E_a, except as provided in para. 319.2.2(b)(4), and then combined in accordance with eq. (17) to determine the computed displacement stress range, S_E, which shall not exceed the allowable displacement stress range, S_A, in para. 302.3.5(d). See also eq. (1d) and Appendix S, Example 3 for the greatest computed displacement stress range.

[8] *WARNING*: No general proof can be offered that this equation will yield accurate or consistently conservative results. It is not applicable to systems used under severe cyclic conditions. It should be used with caution in configurations such as unequal leg U-bends or near-straight "sawtooth" runs, or for large thin-wall pipe ($i \ge 5$), or where extraneous displacements (not in the direction connecting anchor points) constitute a large part of the total displacement. There is no assurance that terminal reactions will be acceptably low, even if a piping system falls within the limitations of eq. (16).

Copyright © 2015 by the American Society of Mechanical Engineers.
No reproduction may be made of this material without written consent of ASME.

$$S_E = \sqrt{(|S_a| + S_b)^2 + (2S_t)^2} \quad (17)$$

where

A_p = cross-sectional area of pipe; see para. 319.3.5

F_a = axial force range between any two conditions being evaluated

i_a = axial stress intensification factor. In the absence of more applicable data, $i_a = 1.0$ for elbows, pipe bends, and miter bends (single, closely spaced, and widely spaced), and $i_a = i_o$ (or i when listed) in Appendix D for other components; see also para. 319.3.6.

i_t = torsional stress intensification factor. In the absence of more applicable data, $i_t = 1.0$; also see para. 319.3.6.

M_t = torsional moment range between any two conditions being evaluated

S_a = axial stress range due to displacement strains $= i_a F_a / A_p$

S_b = bending stress range due to displacement strains

S_t = torsional stress range due to displacement strains $= i_t M_t / 2Z$

Z = section modulus of pipe; see para. 319.3.5

(b) The bending stress range, S_b, to be used in eq. (17) for elbows, miter bends, and full size outlet branch connections (Legs 1, 2, and 3) shall be calculated in accordance with eq. (18), with moments as shown in Figs. 319.4.4A and 319.4.4B.

$$S_b = \frac{\sqrt{(i_i M_i)^2 + (i_o M_o)^2}}{Z} \quad (18)$$

where

i_i = in-plane stress intensification factor; see para. 319.3.6

i_o = out-plane stress intensification factor; see para. 319.3.6

M_i = in-plane bending moment range between any two conditions being evaluated

M_o = out-plane bending moment range between any two conditions being evaluated

(c) The bending stress range, S_b, to be used in eq. (17) for reducing outlet branch connections shall be calculated in accordance with eqs. (19) and (20), with moments as shown in Fig. 319.4.4B.

For header (Legs 1 and 2)

$$S_b = \frac{\sqrt{(i_i M_i)^2 + (i_o M_o)^2}}{Z} \quad (19)$$

For branch (Leg 3)

$$S_b = \frac{\sqrt{(i_i M_i)^2 + (i_o M_o)^2}}{Z_e} \quad (20)$$

where

r_2 = mean branch cross-sectional radius

$\overline{T}_b$ = thickness of pipe matching branch

$\overline{T}_h$ = thickness of pipe matching run of tee or header exclusive of reinforcing elements

T_S = effective branch wall thickness, lesser of $\overline{T}_h$ and $(i_i)(\overline{T}_b)$

Z_e = effective section modulus of branch $= \pi r_2^2 T_S$; see para. 319.3.5

319.4.5 Required Weld Quality Assurance. Any weld at which S_E exceeds $0.8S_A$ (as defined in para. 302.3.5) and the equivalent number of cycles N exceeds 7 000 shall be fully examined in accordance with para. 341.4.3.

319.5 Reactions (14)

Reaction forces and moments used to design restraints and supports for a piping system, and to evaluate the effects of piping displacement on connected equipment, shall be based on the maximum load from operating conditions, including weight, pressure, and other sustained loads; thermal displacement; and, where applicable, occasional loads. The reactions shall be calculated using the modulus of elasticity at the temperature of the condition, E_m (E_a may be used instead of E_m when it provides a more conservative result). The temperature of the condition may differ in different locations within the piping system.

Where cold spring is used in the piping system, experience has shown that it cannot be fully assured. Therefore, the reactions shall be computed both with the assumption that only two-thirds of the design cold spring is present, and with four-thirds of the design cold spring present.

If it is necessary to determine the reactions at ambient temperature, the designer shall consider loads at that condition, including the design cold spring and self springing of piping. Self springing may occur if the operating stress in the piping system exceeds the yield strength of the material or if the piping operates at temperatures in the creep range of the material.

319.5.1 Maximum Reactions for Simple Systems. For a two-anchor piping system without intermediate restraints, the maximum instantaneous values of reaction forces and moments may be estimated from eqs. (21) and (22).

(a) For Extreme Displacement Conditions, R_m. The temperature for this computation is the maximum or minimum metal temperature defined in para. 319.3.1(b), whichever produces the larger reaction.

$$R_m = R\left(1 - \frac{2C}{3}\right)\frac{E_m}{E_a} \quad (21)$$

Copyright © 2015 by the American Society of Mechanical Engineers.
No reproduction may be made of this material without written consent of ASME.

Fig. 319.4.4A Moments in Bends

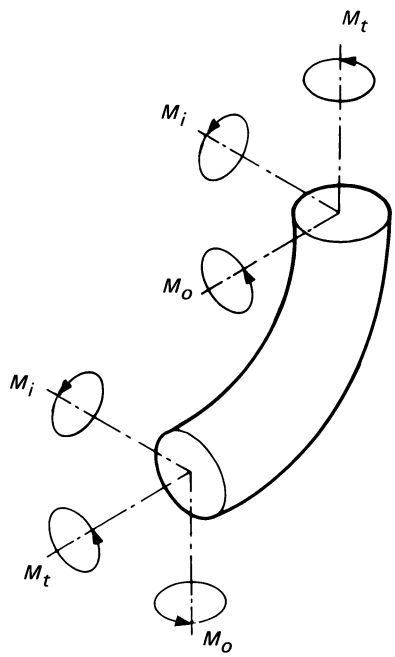

Fig. 319.4.4B Moments in Branch Connections

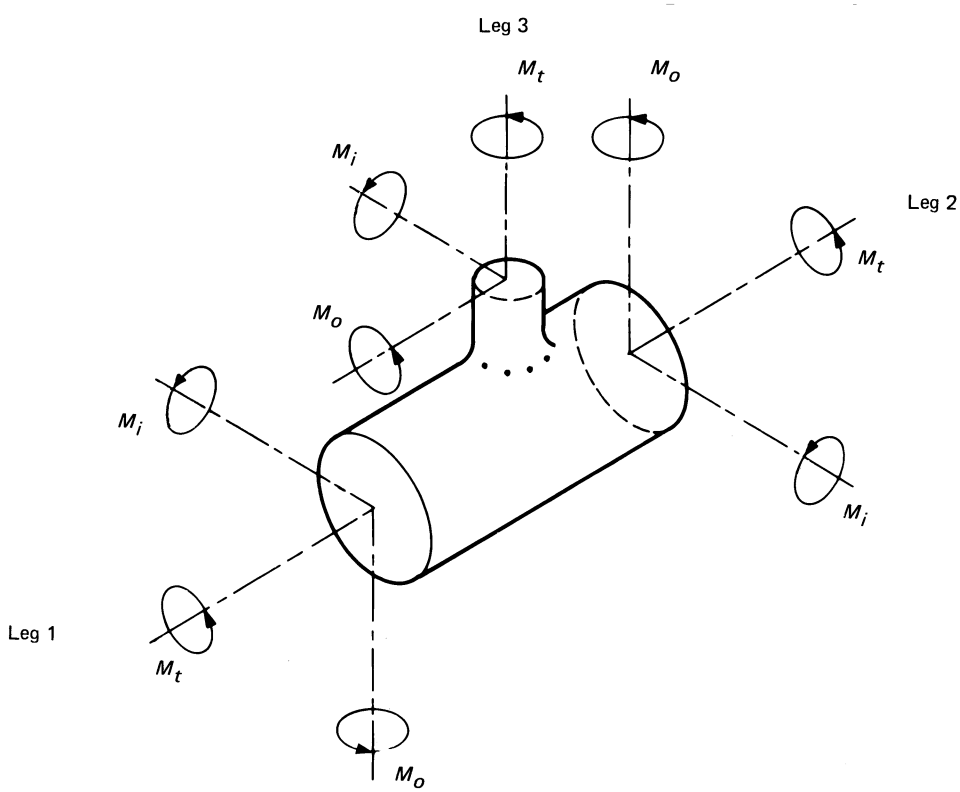

Copyright © 2015 by the American Society of Mechanical Engineers.
No reproduction may be made of this material without written consent of ASME.

where

C = cold-spring factor varying from zero for no cold spring to 1.0 for 100% cold spring. (The factor two-thirds is based on experience showing that specified cold spring cannot be fully assured, even with elaborate precautions.)

E_a = reference modulus of elasticity at 21°C (70°F)

E_m = modulus of elasticity at maximum or minimum metal temperature

R = range of reaction forces or moments (derived from flexibility analysis) corresponding to the full displacement stress range and based on E_a

R_m = estimated instantaneous maximum reaction force or moment at maximum or minimum metal temperature

(b) For Original Condition, R_a. The temperature for this computation is the expected temperature at which the piping is to be assembled.

$R_a = CR$ or C_1R, whichever is greater

where nomenclature is as in para. 319.5.1(a) and

$$C_1 = 1 - \frac{S_h E_a}{S_E E_m} \tag{22}$$

= estimated self-spring or relaxation factor; use zero if value of C_1 is negative

R_a = estimated instantaneous reaction force or moment at installation temperature

S_E = computed displacement stress range (see para. 319.4.4)

S_h = see definition in para. 302.3.5(d)

319.5.2 Maximum Reactions for Complex Systems. For multianchor piping systems and for two-anchor systems with intermediate restraints, eqs. (21) and (22) are not applicable. Each case must be studied to estimate location, nature, and extent of local overstrain, and its effect on stress distribution and reactions.

319.6 Calculation of Movements

Calculations of displacements and rotations at specific locations may be required where clearance problems are involved. In cases where small-size branch pipes attached to stiffer run pipes are to be calculated separately, the linear and angular movements of the junction point must be calculated or estimated for proper analysis of the branch.

319.7 Means of Increasing Flexibility

The layout of piping often provides inherent flexibility through changes in direction, so that displacements produce chiefly bending and torsional strains within prescribed limits. The amount of axial tension or compression strain (which produces large reactions) usually is small.

Where the piping lacks built-in changes of direction, or where it is unbalanced [see para. 319.2.2(b)], large reactions or detrimental overstrain may be encountered. The designer should consider adding flexibility by one or more of the following means: bends, loops, or offsets; swivel joints; corrugated pipe; expansion joints of the bellows or slip-joint type; or other devices permitting angular, rotational, or axial movement. Suitable anchors, ties, or other devices shall be provided as necessary to resist end forces produced by fluid pressure, frictional resistance to movement, and other causes. When expansion joints or other similar devices are provided, the stiffness of the joint or device should be considered in any flexibility analysis of the piping.

320 ANALYSIS OF SUSTAINED LOADS

320.1 Basic Assumptions and Requirements

Sustained conditions may be evaluated by detailed analysis, approximate methods, or simplified means such as span tables. When detailed analysis is performed, the stress due to sustained loads, S_L, shall be computed and combined as described in this paragraph and shall not exceed the allowable described in para. 302.3.5(c). See Appendix S, Example 2 for guidance on loading conditions and support scenarios that result in the greatest S_L for each operating condition being considered. The loads due to weight should be based on the nominal thickness of all system components unless otherwise justified in a more rigorous analysis. Section moduli used to compute the stresses in this paragraph shall be based on nominal pipe dimensions less allowances, i.e., the sum of mechanical (thread or groove depth), internal and external corrosion, and erosion allowances. Areas used to compute the stresses in this paragraph assume nominal pipe dimensions less allowances affecting the inside diameter of the pipe, i.e., the sum of mechanical and internal corrosion and erosion allowances. It is the responsibility of the designer to determine sustained stress indices, I_a, I_i, I_o, and I_t, when a piping component is not explicitly addressed in Appendix D, e.g., base-ells, reducing elbows, crosses, close proximity findings, etc., as well as elbows, pipe bends, or miters other than 90 deg or supported by a trunnion. Sustained stress indices shall not be lower than 1.00.

320.2 Stress Due to Sustained Loads

The equation for the stress due to sustained loads, such as pressure and weight, S_L, is provided in eq. (23a). The equation for the stress due to sustained bending moments, S_b, is provided in eq. (23b).

$$S_L = \sqrt{(|S_a| + S_b)^2 + (2S_t)^2} \tag{23a}$$

$$S_b = \frac{\sqrt{(I_i M_i)^2 + (I_o M_o)^2}}{Z} \tag{23b}$$

Copyright © 2015 by the American Society of Mechanical Engineers.
No reproduction may be made of this material without written consent of ASME.

where

I_i = sustained in-plane moment index. In the absence of more applicable data, I_i is taken as the greater of $0.75i_i$ or 1.00.

I_o = sustained out-plane moment index. In the absence of more applicable data, I_o is taken as the greater of $0.75i_o$ or 1.00.

M_i = in-plane moment due to sustained loads, e.g., pressure and weight

M_o = out-plane moment due to sustained loads, e.g., pressure and weight

Z = sustained section modulus. Z in eqs. (23b) and (23c) is described in para. 319.4.4 but is computed in this paragraph using nominal pipe dimensions less allowances; see para. 320.1.

The equation for the stress due to sustained torsional moment, S_t, is

$$S_t = \frac{I_t M_t}{2Z} \tag{23c}$$

where

I_t = sustained torsional moment index. In the absence of more applicable data, I_t is taken as 1.00.

M_t = torsional moment due to sustained loads, e.g., pressure and weight

The equation for the stress due to sustained longitudinal force, S_a, is

$$S_a = \frac{I_a F_a}{A_p} \tag{23d}$$

where

A_p = cross-sectional area of the pipe, considering nominal pipe dimensions less allowances; see para. 320.1

F_a = longitudinal force due to sustained loads, e.g., pressure and weight

I_a = sustained longitudinal force index. In the absence of more applicable data, I_a is taken as 1.00.

The sustained longitudinal force, F_a, includes the sustained force due to pressure, which is $P_j A_f$ unless the piping system includes an expansion joint that is not designed to carry this force itself, where P_j is the internal operating pressure for the condition being considered, $A_f = \pi d^2/4$, and d is the pipe inside diameter considering pipe wall thickness less applicable allowances; see para. 320.1. For piping systems that contain expansion joints, it is the responsibility of the designer to determine the sustained longitudinal force due to pressure in the piping system.

321 PIPING SUPPORT

321.1 General

The design of support structures (not covered by this Code) and of supporting elements (see definitions of piping and pipe supporting elements in para. 300.2) shall be based on all concurrently acting loads transmitted into such supports. These loads, defined in para. 301, include weight effects, loads introduced by service pressures and temperatures, vibration, wind, earthquake, shock, and displacement strain (see para. 319.2.2).

For piping containing gas or vapor, weight calculations need not include the weight of liquid if the designer has taken specific precautions against entrance of liquid into the piping, and if the piping is not to be subjected to hydrostatic testing at initial construction or subsequent inspections.

321.1.1 Objectives. The layout and design of piping and its supporting elements shall be directed toward preventing the following:

(a) piping stresses in excess of those permitted in this Code

(b) leakage at joints

(c) excessive thrusts and moments on connected equipment (such as pumps and turbines)

(d) excessive stresses in the supporting (or restraining) elements

(e) resonance with imposed or fluid-induced vibrations

(f) excessive interference with thermal expansion and contraction in piping which is otherwise adequately flexible

(g) unintentional disengagement of piping from its supports

(h) excessive piping sag in piping requiring drainage slope

(i) excessive distortion or sag of piping (e.g., thermoplastics) subject to creep under conditions of repeated thermal cycling

(j) excessive heat flow, exposing supporting elements to temperature extremes outside their design limits

321.1.2 Analysis. In general, the location and design of pipe supporting elements may be based on simple calculations and engineering judgment. However, when a more refined analysis is required and a piping analysis, which may include support stiffness, is made, the stresses, moments, and reactions determined thereby shall be used in the design of supporting elements.

321.1.3 Stresses for Pipe Supporting Elements. Allowable stresses for materials used for pipe supporting elements, except springs, shall be in accordance with para. 302.3.1. Longitudinal weld joint factors, E_j, however, need not be applied to the allowable stresses for

Copyright © 2015 by the American Society of Mechanical Engineers.
No reproduction may be made of this material without written consent of ASME.

welded piping components that are to be used for pipe supporting elements.

(14) **321.1.4 Materials**

(a) Permanent supports and restraints shall be of material suitable for the service conditions. If steel is cold-formed to a centerline radius less than twice its thickness, it shall be annealed or normalized after forming.

(b) Gray, ductile, and malleable iron may be used for rollers, roller bases, anchor bases, and other supporting elements subject chiefly to compressive loading. Gray iron is not recommended if the piping may be subject to impact-type loading resulting from pulsation or vibration. Ductile and malleable iron may be used for pipe and beam clamps, hanger flanges, clips, brackets, and swivel rings.

(c) Steel of an unknown specification may be used for pipe supporting elements that are not welded directly to pressure-containing piping components. (Compatible intermediate materials of known specification may be welded directly to such components.) Basic allowable stress in tension or compression shall not exceed 82 MPa (12 ksi) and the support temperature shall be within the range of −29°C to 343°C (−20°F to 650°F). For stress values in shear and bearing, see para. 302.3.1(b).

(d) Wood or other materials may be used for pipe supporting elements, provided the supporting element is properly designed, considering temperature, strength, and durability.

(e) Attachments welded or bonded to the piping shall be of a material compatible with the piping and service. For other requirements, see para. 321.3.2.

321.1.5 Threads. Screw threads shall conform to ASME B1.1 unless other threads are required for adjustment under heavy loads. Turnbuckles and adjusting nuts shall have the full length of internal threads engaged. Any threaded adjustment shall be provided with a locknut, unless locked by other means.

321.2 Fixtures

321.2.1 Anchors and Guides

(a) A supporting element used as an anchor shall be designed to maintain an essentially fixed position.

(b) To protect terminal equipment or other (weaker) portions of the system, restraints (such as anchors and guides) shall be provided where necessary to control movement or to direct expansion into those portions of the system that are designed to absorb them. The design, arrangement, and location of restraints shall ensure that expansion joint movements occur in the directions for which the joint is designed. In addition to the other thermal forces and moments, the effects of friction in other supports of the system shall be considered in the design of such anchors and guides.

(c) Piping layout, anchors, restraints, guides, and supports for all types of expansion joints shall be designed in accordance with para. X301.2 of Appendix X.

321.2.2 Inextensible Supports Other Than Anchors and Guides [9]

(a) Supporting elements shall be designed to permit the free movement of piping caused by thermal expansion and contraction.

(b) Hangers include pipe and beam clamps, clips, brackets, rods, straps, chains, and other devices. They shall be proportioned for all required loads. Safe loads for threaded parts shall be based on the root area of the threads.

(c) Sliding Supports. Sliding supports (or shoes) and brackets shall be designed to resist the forces due to friction in addition to the loads imposed by bearing. The dimensions of the support shall provide for the expected movement of the supported piping.

321.2.3 Resilient Supports [9]

(a) Spring supports shall be designed to exert a supporting force, at the point of attachment to the pipe, equal to the load as determined by weight balance calculations. They shall be provided with means to prevent misalignment, buckling, or eccentric loading of the springs, and to prevent unintentional disengagement of the load.

(b) Constant-support spring hangers provide a substantially uniform supporting force throughout the range of travel. The use of this type of spring hanger is advantageous at locations subject to appreciable movement with thermal changes. Hangers of this type should be selected so that their travel range exceeds expected movements.

(c) Means shall be provided to prevent overstressing spring hangers due to excessive deflections. It is recommended that all spring hangers be provided with position indicators.

321.2.4 Counterweight Supports. Counterweights shall be provided with stops to limit travel. Weights shall be positively secured. Chains, cables, hangers, rocker arms, or other devices used to attach the counterweight load to the piping shall be subject to the requirements of para. 321.2.2.

321.2.5 Hydraulic Supports. An arrangement utilizing a hydraulic cylinder may be used to give a constant supporting force. Safety devices and stops shall be provided to support the load in case of hydraulic failure.

321.3 Structural Attachments

External and internal attachments to piping shall be designed so that they will not cause undue flattening of the pipe, excessive localized bending stresses, or harmful

[9] Various types of inextensible (solid) and resilient supports are illustrated in MSS SP-58.

Copyright © 2015 by the American Society of Mechanical Engineers.
No reproduction may be made of this material without written consent of ASME.

thermal gradients in the pipe wall. It is important that attachments be designed to minimize stress concentration, particularly in cyclic services.

321.3.1 Nonintegral Attachments. Nonintegral attachments, in which the reaction between the piping and the attachment is by contact, include clamps, slings, cradles, U-bolts, saddles, straps, and clevises. If the weight of a vertical pipe is supported by a clamp, it is recommended to prevent slippage that the clamp be located below a flange, fitting, or support lugs welded to the pipe.

321.3.2 Integral Attachments. Integral attachments include plugs, ears, shoes, plates, trunnions, stanchions, structural shapes, and angle clips, cast on or welded to the piping. The material for integral attachments attached by welding shall be of good weldable quality. [See para. 321.1.4(e) for material requirements.] Preheating, welding, and heat treatment requirements shall be in accordance with Chapter V. Consideration shall be given to the localized stresses induced in the piping component by welding the integral attachment, as well as differential thermal displacement strains between the attachment and the component to which it is attached. Welds shall be proportioned so that the shear stresses meet the requirements of para. 302.3.1(b). If the allowed stress values differ between the piping component and the attachment material, the lower of the two values shall be used.

(a) Integral reinforcement, complete encirclement reinforcement, or intermediate pads of suitable alloy and design may be used to reduce contamination or undesirable heat effects in alloy piping.

(b) Intermediate pads, integral reinforcement, complete encirclement reinforcement, or other means of reinforcement may be used to distribute stresses.

321.4 Structural Connections

The load from piping and pipe supporting elements (including restraints and braces) shall be suitably transmitted to a pressure vessel, building, platform, support structure, foundation, or to other piping capable of bearing the load without deleterious effects. See Appendix F, para. F321.4.

PART 6
SYSTEMS

322 SPECIFIC PIPING SYSTEMS

322.3 Instrument Piping

322.3.1 Definition. Instrument piping within the scope of this Code includes all piping and piping components used to connect instruments to other piping or equipment, and control piping used to connect air or hydraulically operated control apparatus. It does not include instruments, or permanently sealed fluid-filled tubing systems furnished with instruments as temperature or pressure responsive devices.

322.3.2 Requirements. Instrument piping shall meet the applicable requirements of the Code and the following:

(a) The design pressure and temperature for instrument piping shall be determined in accordance with para. 301. If more severe conditions are experienced during blowdown of the piping, they may be treated as occasional variations in accordance with para. 302.2.4.

(b) Consideration shall be given to the mechanical strength (including fatigue) of small instrument connections to piping or apparatus (see para. 304.3.5).

(c) Instrument piping containing fluids that are normally static and subject to freezing shall be protected by heat tracing or other heating methods, and insulation.

(d) If it will be necessary to blow down (or bleed) instrument piping containing toxic or flammable fluids, consideration shall be given to safe disposal.

322.6 Pressure-Relieving Systems

Pressure-relieving systems within the scope of this Code shall conform to the following requirements. See also Appendix F, para. F322.6.

322.6.1 Stop Valves in Pressure Relief Piping. If one or more stop valves are installed between the piping being protected and its protective device or devices, or between the protective device or devices and the point of discharge, they shall meet the requirements of (a) and either (b) or (c), below.

(a) A full-area stop valve may be installed on the inlet side of a pressure-relieving device. A full area stop valve may be placed on the discharge side of a pressure-relieving device when its discharge is connected to a common header with other discharge lines from other pressure-relieving devices. Stop valves of less than full area may be used on both the inlet side and discharge side of pressure-relieving devices as outlined herein if the stop valves are of such type and size that the increase in pressure drop will not reduce the relieving capacity below that required, nor adversely affect the proper operation of the pressure-relieving device.

(b) Stop valves to be used in pressure relief piping shall be so constructed or positively controlled that the closing of the maximum number of block valves possible at one time will not reduce the pressure-relieving capacity provided by the unaffected relieving devices below the required relieving capacity.

(c) As an alternative to (b) above, stop valves shall be so constructed and arranged that they can be locked or sealed in either the open or closed position. See Appendix F, para. F322.6.

322.6.2 Pressure Relief Discharge Piping. Discharge lines from pressure-relieving safety devices shall be designed to facilitate drainage. When discharging

Copyright © 2015 by the American Society of Mechanical Engineers.
No reproduction may be made of this material without written consent of ASME.

directly to the atmosphere, discharge shall not impinge on other piping or equipment and shall be directed away from platforms and other areas used by personnel. Reactions on the piping system due to actuation of safety relief devices shall be considered, and adequate strength shall be provided to withstand these reactions.

322.6.3 Pressure-Relieving Devices

(a) Pressure-relieving devices required by para. 301.2.2(a) shall be in accordance with the BPV Code, Section VIII, Division 1, UG-125(c), UG-126, UG-127, and UG-132 through UG-136, excluding UG-135(e) and UG-136(c). The terms *design pressure*[10] and *piping system* shall be substituted for *maximum allowable working pressure* and *vessel*, respectively, in these paragraphs. The required relieving capacity of any pressure-relieving device shall include consideration of all piping systems that it protects.

(b) Relief set pressure[11] shall be in accordance with Section VIII, Division 1, with the exceptions stated in alternatives (1) and (2), below.

(1) With the owner's approval the set pressure may exceed the limits in Section VIII, Division 1, provided that the limit on maximum relieving pressure stated in (c) below will not be exceeded.

(2) For a liquid thermal expansion relief device that protects only a blocked-in portion of a piping system, the set pressure shall not exceed the lesser of the system test pressure or 120% of design pressure.

(c) The maximum relieving pressure[12] shall be in accordance with Section VIII, Division 1, with the exception that the allowances in para. 302.2.4(f) are permitted, provided that all other requirements of para. 302.2.4 are also met.

[10] The *design pressure* for pressure relief is the maximum design pressure permitted, considering all components in the piping system.

[11] *Set pressure* is the pressure at which the device begins to relieve, e.g., lift pressure of a spring-actuated relief valve, bursting pressure of a rupture disk, or breaking pressure of a breaking pin device.

[12] *Maximum relieving pressure* is the maximum system pressure during a pressure relieving event.

Copyright © 2015 by the American Society of Mechanical Engineers.
No reproduction may be made of this material without written consent of ASME.

Chapter III
Materials

323 GENERAL REQUIREMENTS

Chapter III states limitations and required qualifications for materials based on their inherent properties. Their use in piping is also subject to requirements and limitations in other parts of this Code [see para. 300(d)]. See also para. 321.1.4 for support materials, and Appendix F, para. F323, for precautionary considerations.

323.1 Materials and Specifications

323.1.1 Listed Materials. Any material used in pressure containing piping components shall conform to a listed specification except as provided in para. 323.1.2.

323.1.2 Unlisted Materials. Unlisted materials may be used provided they conform to a published specification covering chemistry, physical and mechanical properties, method and process of manufacture, heat treatment, and quality control, and otherwise meet the requirements of this Code. See also ASME BPV Code Section II, Part D, Appendix 5. Allowable stresses shall be determined in accordance with the applicable allowable stress basis of this Code or a more conservative basis.

323.1.3 Unknown Materials. Materials of unknown specification shall not be used for pressure-containing piping components.

323.1.4 Reclaimed Materials. Reclaimed pipe and other piping components may be used, provided they are properly identified as conforming to a listed or published specification (para. 323.1.1 or 323.1.2) and otherwise meet the requirements of this Code. Sufficient cleaning and inspection shall be made to determine minimum wall thickness and freedom from imperfections that would be unacceptable in the intended service.

323.2 Temperature Limitations

The designer shall verify that materials that meet other requirements of the Code are suitable for service throughout the operating temperature range.

323.2.1 Upper Temperature Limits, Listed Materials. A listed material may be used at a temperature above the maximum for which a stress value or rating is shown, only if

(a) there is no prohibition in Appendix A or elsewhere in the Code

(b) the designer verifies the serviceability of the material in accordance with para. 323.2.4

323.2.2 Lower Temperature Limits, Listed Materials. See Appendix F, para. F323.2.2. (14)

(a) A listed material may be used at any temperature not lower than the minimum shown in Table A-1, provided that the base metal, weld deposits, and heat-affected zone (HAZ) are qualified as required by the applicable entry in Column A of Table 323.2.2.

(b) For carbon steels with a letter designation in the Min. Temp. column of Table A-1, the minimum temperature is defined by the applicable curve and Notes in Fig. 323.2.2A. If a design minimum temperature–thickness combination is on or above the curve, impact testing is not required.

(c) A listed material may be used at a temperature lower than the minimum shown in Table A-1 or Fig. 323.2.2A (including Notes), unless prohibited in Table 323.2.2, Table A-1, or elsewhere in the Code, and provided that the base metal, weld deposits, and HAZ are qualified as required by the applicable entry in Column B of Table 323.2.2.

(d) Figure 323.2.2B provides a further basis for the use of carbon steels covered by paras. 323.2.2(a) and (b), without impact testing, when all of the following apply:

- not in elevated temperature service
- not expected to experience shock loading or thermal bowing
- does not contain welds between dissimilar materials (e.g., austenitic welded to ferritic)
- stress ratio defined in Fig. 323.2.2B is less than one

(1) For design minimum temperatures of −48°C (−55°F) and above, the lowest temperature without impact testing (exemption temperature) determined in para. 323.2.2(b), for the given material and thickness, may be reduced by the amount of the temperature reduction provided in Fig. 323.2.2B for the applicable stress ratio. If the resulting temperature is lower than the design minimum temperature, impact testing of the material is not required. Where this is applied, the piping

Copyright © 2015 by the American Society of Mechanical Engineers.
No reproduction may be made of this material without written consent of ASME.

Table 323.2.2 Requirements for Low Temperature Toughness Tests for Metals (14)

These Toughness Test Requirements Are in Addition to Tests Required by the Material Specification

	Type of Material	Column A Design Minimum Temperature at or Above Min. Temp. in Table A-1 or Fig. 323.2.2A		Column B Design Minimum Temperature Below Min. Temp. in Table A-1 or Fig. 323.2.2A
Listed Materials	1 Gray iron	**A-1** No additional requirements		**B-1** No additional requirements
	2 Malleable and ductile iron; carbon steel in accordance with Note (1)	**A-2** No additional requirements		**B-2** Materials designated in Box 2 shall not be used.
		(a) Base Metal	**(b) Weld Metal and Heat Affected Zone (HAZ) [Note (2)]**	
	3 Other carbon steels, low and intermediate alloy steels, high alloy ferritic steels, duplex stainless steels	**A-3** (a) No additional requirements	**A-3** (b) Weld metal deposits shall be impact tested in accordance with para. 323.3 if design min. temp. < −29°C (−20°F), except as provided in Notes (3) and (5), and except as follows: for materials listed for Curves C and D of Fig. 323.2.2A, where corresponding welding consumables are qualified by impact testing at the design minimum temperature or lower in accordance with the applicable AWS specification, additional testing is not required.	**B-3** Except as provided in Notes (3) and (5), heat treat base metal in accordance with applicable ASTM specification listed in para. 323.3.2; then impact test base metal, weld deposits, and HAZ in accordance with para. 323.3 [see Note (2)]. When materials are used at design min. temp. below the assigned curve as permitted by Notes (2) and (3) of Fig. 323.2.2A, weld deposits and HAZ shall be impact tested [see Note (2)].
	4 Austenitic stainless steels	**A-4** (a) If: (1) carbon content by analysis > 0.1%; or (2) material is not in solution heat treated condition; then, impact test in accordance with para. 323.3 for design min. temp. < −29°C (−20°F) except as provided in Notes (3) and (6)	**A-4** (b) Weld metal deposits shall be impact tested in accordance with para. 323.3 if design min. temp. < −29°C (−20°F) except as provided in para. 323.2.2 and in Notes (3) and (6)	**B-4** Base metal and weld metal deposits shall be impact tested in accordance with para. 323.3. See Notes (2), (3), and (6).
	5 Austenitic ductile iron, ASTM A571	**A-5** (a) No additional requirements	**A-5** (b) Welding is not permitted	**B-5** Base metal shall be impact tested in accordance with para. 323.3. Do not use < −196°C (−320°F). Welding is not permitted.
	6 Aluminum, copper, nickel, and their alloys; unalloyed titanium	**A-6** (a) No additional requirements	**A-6** (b) No additional requirements unless filler metal composition is outside the range for base metal composition; then test in accordance with item B-6	**B-6** Designer shall be assured by suitable tests [see Note (4)] that base metal, weld deposits, and HAZ are suitable at the design min. temp.
Unlisted Materials	7 An unlisted material shall conform to a published specification. Where composition, heat treatment, and product form are comparable to those of a listed material, requirements for the corresponding listed material shall be met. Other unlisted materials shall be qualified as required in the applicable section of column B.			

Copyright © 2015 by the American Society of Mechanical Engineers.
No reproduction may be made of this material without written consent of ASME.

(14) **Table 323.2.2 Requirements for Low Temperature Toughness Tests for Metals (Cont'd)**

NOTES:
(1) Carbon steels conforming to the following are subject to the limitations in Box B-2: plates in accordance with ASTM A36, A283, and A570; pipe in accordance with ASTM A134 when made from these plates; structural shapes in accordance with ASTM A992; and pipe in accordance with ASTM A53 Type F and API 5L Gr. A25 butt weld.
(2) Impact tests that meet the requirements of Table 323.3.1, which are performed as part of the weld procedure qualification, will satisfy all requirements of para. 323.2.2, and need not be repeated for production welds.
(3) Impact testing is not required if the design minimum temperature is below −29°C (−20°F) but at or above −104°C (−155°F) and the stress ratio defined in Fig. 323.2.2B does not exceed 0.3.
(4) Tests may include tensile elongation, sharp-notch tensile strength (to be compared with unnotched tensile strength), and/or other tests, conducted at or below design minimum temperature. See also para. 323.3.4.
(5) Impact tests are not required when the maximum obtainable Charpy specimen has a width along the notch of less than 2.5 mm (0.098 in.). Under these conditions, and where the stress ratio defined in Fig. 323.2.2B exceeds 0.3, the design minimum temperature shall not be less than the lower of −48°C (−55°F) or the minimum temperature for the material in Table A-1.
(6) Impact tests are not required when the maximum obtainable Charpy specimen has a width along the notch of less than 2.5 mm (0.098 in.).

system shall also comply with the following requirements:

(-a) The piping shall be subjected to a hydrostatic test at no less than 1½ times the design pressure.

(-b) Except for piping with a nominal wall thickness of 13 mm (½ in.) or less, the piping system shall be safeguarded (see Appendix G) from external loads such as maintenance loads, impact loads, and thermal shock.

(2) For design minimum temperatures lower than −48°C (−55°F), impact testing is required for all materials, except as provided by Note (3) of Table 323.2.2.

(e) The allowable stress or component rating at any temperature below the minimum shown in Table A-1 or Fig. 323.2.2A shall not exceed the stress value or rating at the minimum temperature in Table A-1 or the component standard.

(f) Impact testing is not required for the following combinations of weld metals and design minimum temperatures:

(1) for austenitic stainless steel base materials having a carbon content not exceeding 0.10%, welded without filler metal, at design minimum temperatures of −101°C (−150°F) and higher

(2) for austenitic weld metal

(-a) having a carbon content not exceeding 0.10%, and produced with filler metals conforming to AWS A5.4, A5.9, A5.11, A5.14, or A5.22[1] at design minimum temperatures of −101°C (−150°F) and higher, or

(-b) having a carbon content exceeding 0.10%, and produced with filler metals conforming to AWS A5.4, A5.9, A5.11, A5.14, or A5.22[1] at design minimum temperatures of −48°C (−55°F) and higher

323.2.3 Temperature Limits, Unlisted Materials. An unlisted material, acceptable under para. 323.1.2, shall be qualified for service at all temperatures within a stated range, from design minimum temperature to design maximum temperature, in accordance with para. 323.2.4.

323.2.4 Verification of Serviceability

(a) When an unlisted material is to be used, or when a listed material is to be used above the highest temperature for which stress values appear in Appendix A, the designer is responsible for demonstrating the validity of the allowable stresses and other limits used in design and of the approach taken in using the material, including the derivation of stress data and the establishment of temperature limits.

(b) Data for the development of design limits shall be obtained from a sound scientific program carried out in accordance with recognized technology for both the material and the intended service conditions. Factors to be considered include

(1) applicability and reliability of the data, especially for extremes of the temperature range

(2) resistance of the material to deleterious effects of the fluid service and of the environment throughout the temperature range

(3) determination of allowable stresses in accordance with para. 302.3

323.3 Impact Testing Methods and Acceptance Criteria

323.3.1 General. When impact testing is required by Table 323.2.2, provisions elsewhere in this Code, or the engineering design, it shall be done in accordance with Table 323.3.1 using the testing methods and acceptance criteria described in paras. 323.3.2 through 323.3.5.

[1] Titles of referenced AWS standards are as follows: AWS A5.4, Stainless Steel Electrodes for Shielded Metal Arc Welding; AWS A5.9, Bare Stainless Steel Welding Electrodes and Rods; AWS A5.11, Nickel and Nickel Alloy Welding Electrodes for Shielded Metal Arc Welding; AWS A5.14, Nickel and Nickel Alloy Bare Welding Electrodes and Rods; and AWS A5.22, Flux Cored Corrosion-Resisting Chromium and Chromium-Nickel Steel Electrodes.

Copyright © 2015 by the American Society of Mechanical Engineers.
No reproduction may be made of this material without written consent of ASME.

Fig. 323.2.2A Minimum Temperatures Without Impact Testing for Carbon Steel Materials
(See Table A-1 for Designated Curve for a Listed Material; see Table 323.2.2A for Tabular Values)

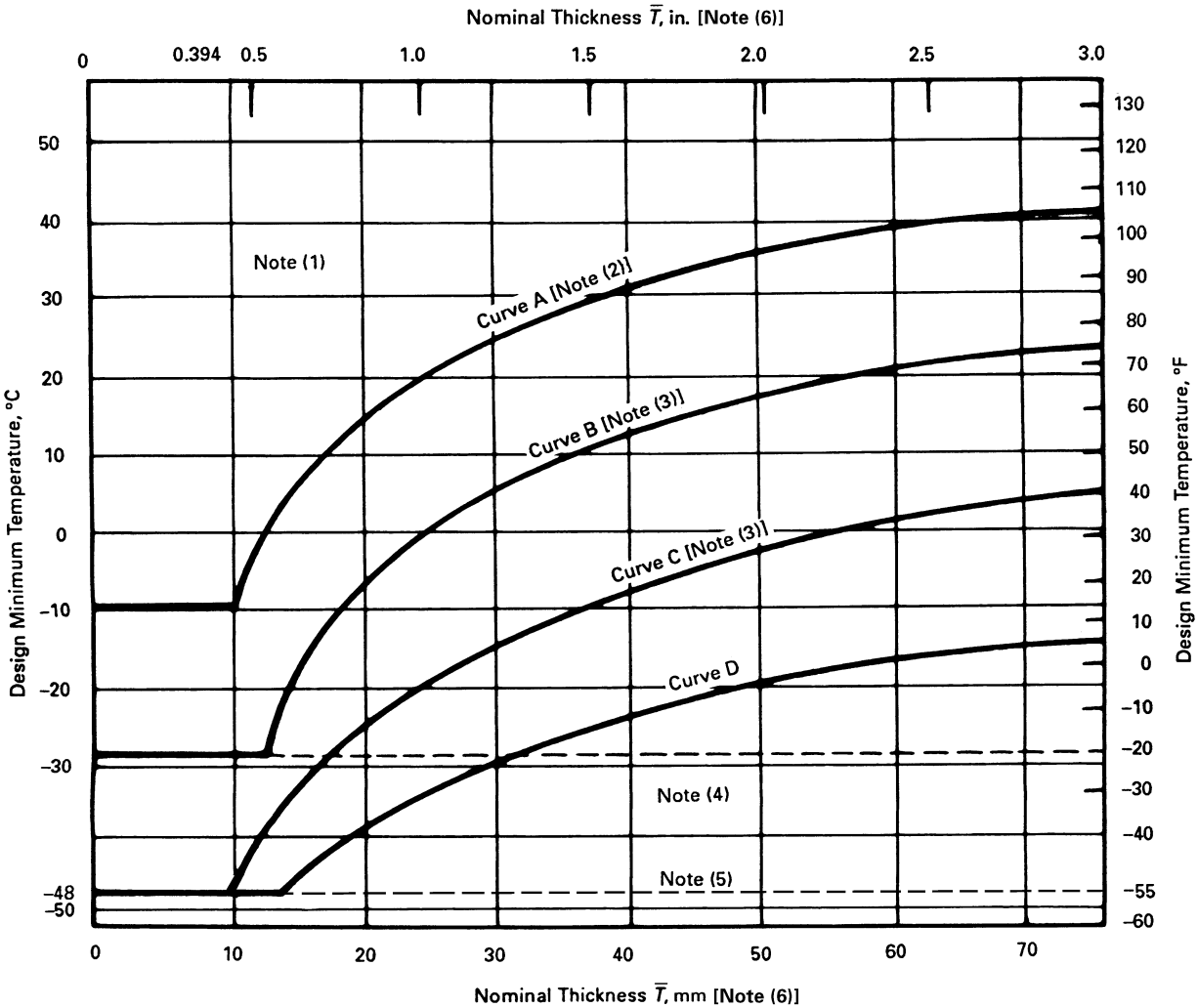

NOTES:

(1) Any carbon steel material may be used to a minimum temperature of −29°C (−20°F) for Category D Fluid Service.

(2) X Grades of API 5L, and ASTM A381 materials, may be used in accordance with Curve B if normalized or quenched and tempered.

(3) The following materials may be used in accordance with Curve D if normalized:
  (a) ASTM A516 plate, all grades
  (b) ASTM A671 pipe made from A516 plate, all grades
  (c) ASTM A672 pipe made from A516 plate, all grades

(4) A welding procedure for the manufacture of pipe or components shall include impact testing of welds and HAZ for any design minimum temperature below −29°C (−20°F), except as provided in Table 323.2.2, A-3(b).

(5) Impact testing in accordance with para. 323.3 is required for any design minimum temperature below −48°C (−55°F), except as permitted by Note (3) in Table 323.2.2.

(6) For blind flanges and blanks, $\overline{T}$ shall be ¼ of the flange thickness.

Copyright © 2015 by the American Society of Mechanical Engineers.
No reproduction may be made of this material without written consent of ASME.

(14) **Table 323.2.2A Tabular Values for Minimum Temperatures Without Impact Testing for Carbon Steel Materials (See Fig. 323.2.2A for Curves and Applicable Notes)**

Nominal Thickness, $\bar{T}$ [Note (6)]		Lowest Exemption Temperature							
		Curve A [Note (2)]		Curve B [Note (3)]		Curve C [Note (3)]		Curve D	
mm	in.	°C	°F	°C	°F	°C	°F	°C	°F
6.4	0.25	−9.4	15	−28.9	−20	−48.3	−55	−48.3	−55
7.9	0.3125	−9.4	15	−28.9	−20	−48.3	−55	−48.3	−55
9.5	0.375	−9.4	15	−28.9	−20	−48.3	−55	−48.3	−55
10.0	0.394	−9.4	15	−28.9	−20	−48.3	−55	−48.3	−55
11.1	0.4375	−6.7	20	−28.9	−20	−41.7	−43	−48.3	−55
12.7	0.5	−1.1	30	−28.9	−20	−37.8	−36	−48.3	−55
14.3	0.5625	2.8	37	−21.7	−7	−35.0	−31	−45.6	−50
15.9	0.625	6.1	43	−16.7	2	−32.2	−26	−43.9	−47
17.5	0.6875	8.9	48	−12.8	9	−29.4	−21	−41.7	−43
19.1	0.75	11.7	53	−9.4	15	−27.2	−17	−40.0	−40
20.6	0.8125	14.4	58	−6.7	20	−25.0	−13	−38.3	−37
22.2	0.875	16.7	62	−3.9	25	−23.3	−10	−36.7	−34
23.8	0.9375	18.3	65	−1.7	29	−21.7	−7	−35.6	−32
25.4	1.0	20.0	68	0.6	33	−19.4	−3	−34.4	−30
27.0	1.0625	22.2	72	2.2	36	−18.3	−1	−33.3	−28
28.6	1.125	23.9	75	3.9	39	−16.7	2	−32.2	−26
30.2	1.1875	25.0	77	5.6	42	−15.6	4	−30.6	−23
31.8	1.25	26.7	80	6.7	44	−14.4	6	−29.4	−21
33.3	1.3125	27.8	82	7.8	46	−13.3	8	−28.3	−19
34.9	1.375	28.9	84	8.9	48	−12.2	10	−27.8	−18
36.5	1.4375	30.0	86	9.4	49	−11.1	12	−26.7	−16
38.1	1.5	31.1	88	10.6	51	−10.0	14	−25.6	−14
39.7	1.5625	32.2	90	11.7	53	−8.9	16	−25.0	−13
41.3	1.625	33.3	92	12.8	55	−8.3	17	−23.9	−11
42.9	1.6875	33.9	93	13.9	57	−7.2	19	−23.3	−10
44.5	1.75	34.4	94	14.4	58	−6.7	20	−22.2	−8
46.0	1.8125	35.6	96	15.0	59	−5.6	22	−21.7	−7
47.6	1.875	36.1	97	16.1	61	−5.0	23	−21.1	−6
49.2	1.9375	36.7	98	16.7	62	−4.4	24	−20.6	−5
50.8	2.0	37.2	99	17.2	63	−3.3	26	−20.0	−4
51.6	2.0325	37.8	100	17.8	64	−2.8	27	−19.4	−3
54.0	2.125	38.3	101	18.3	65	−2.2	28	−18.9	−2
55.6	2.1875	38.9	102	18.9	66	−1.7	29	−18.3	−1
57.2	2.25	38.9	102	19.4	67	−1.1	30	−17.8	0
58.7	2.3125	39.4	103	20.0	68	−0.6	31	−17.2	1
60.3	2.375	40.0	104	20.6	69	0.0	32	−16.7	2
61.9	2.4375	40.6	105	21.1	70	0.6	33	−16.1	3
63.5	2.5	40.6	105	21.7	71	1.1	34	−15.6	4
65.1	2.5625	41.1	106	21.7	71	1.7	35	−15.0	5
66.7	2.625	41.7	107	22.8	73	2.2	36	−14.4	6
68.3	2.6875	41.7	107	22.8	73	2.8	37	−13.9	7
69.9	2.75	42.2	108	23.3	74	3.3	38	−13.3	8
71.4	2.8125	42.2	108	23.9	75	3.9	39	−13.3	8
73.0	2.875	42.8	109	24.4	76	4.4	40	−12.8	9
74.6	2.9375	42.8	109	25.0	77	4.4	40	−12.2	10
76.2	3.0	43.3	110	25.0	77	5.0	41	−11.7	11

Copyright © 2015 by the American Society of Mechanical Engineers.
No reproduction may be made of this material without written consent of ASME.

Fig. 323.2.2B Reduction in Lowest Exemption Temperature Without Impact Testing (14)

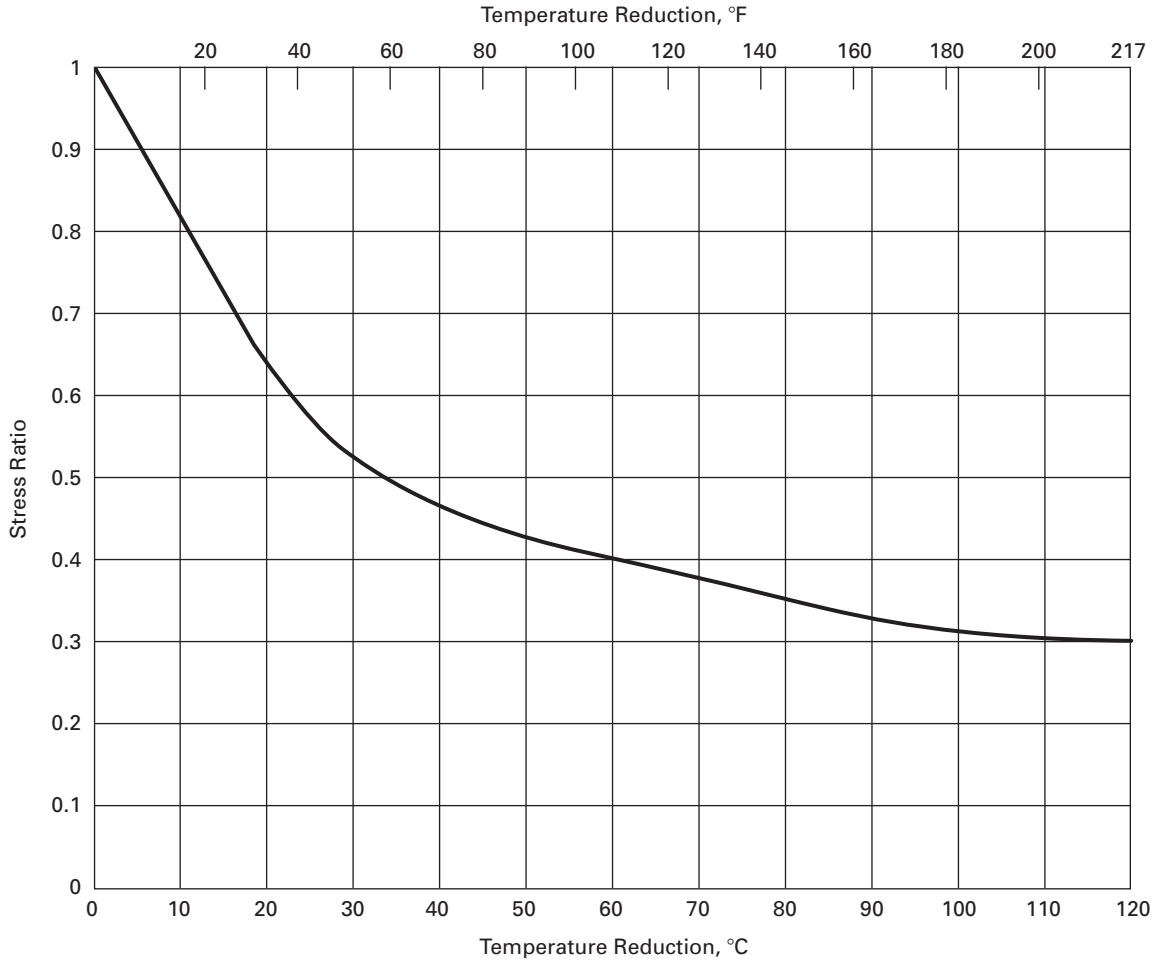

GENERAL NOTES:

(a) The stress ratio is defined as the maximum of the following:

(1) circumferential pressure stress for the condition under consideration (based on minimum pipe wall thickness less allowances) divided by the basic allowable stress at the condition under consideration.

(2) for piping components with pressure ratings, the pressure for the condition under consideration divided by the pressure rating at the condition under consideration.

(3) combined stress due to pressure, dead loads, live loads, and displacement strain for the condition under consideration divided by the basic allowable stress at the condition under consideration. In calculating this combined stress, the forces and moments in the piping system for these combined sustained loads and displacement strains shall be calculated using nominal dimensions, and the stresses shall be calculated using eqs. (23a) through (23d) with all of the stress indices taken as 1.0 ($I_a = I_i = I_o = I_t = 1.0$) and using section properties based on the nominal dimensions less corrosion, erosion, and mechanical allowances. Also see Appendix F, para. F323.2.2.

(b) The stress ratio may be interpolated within the range 0.3 to 1.0.

Copyright © 2015 by the American Society of Mechanical Engineers.
No reproduction may be made of this material without written consent of ASME.

(14) **Table 323.3.1 Impact Testing Requirements for Metals**

	Test Characteristics	Column A Materials Tested by the Manufacturer [Note (1)] or Those in Table 323.2.2 Requiring Impact Tests Only on Welds	Column B Materials Not Tested by the Manufacturer or Those Tested But Heat Treated During or After Fabrication
Tests on Materials	Number of tests	**A-1** The greater of the number required by (a) the material specification or (b) the applicable specification listed in para. 323.3.2 [Note (2)]	**B-1** The number required by the applicable specification listed in para. 323.3.2 [Note (2)]
	Location and orientation of specimens	**2** As required by the applicable specification listed in para. 323.3.2.	
	Tests by	**A-3** The manufacturer	**B-3** The fabricator or erector
Tests on Welds in Fabrication or Assembly	Test piece for preparation of impact specimens	**4** One required for each welding procedure, for each type of filler metal (i.e., AWS E-XXXX classification), and for each flux to be used. Test pieces shall be subjected to essentially the same heat treatment (including time at temperature or temperatures and cooling rate) as the erected piping will have received.	
	Number of test pieces [Note (3)]	**A-5** (a) One piece, thickness T, for each range of material thickness from $T/2$ to $T + 6$ mm ($^1/_4$ in.) (b) Unless required by the engineering design, pieces need not be made from each lot, nor from material for each job, provided that welds have been tested as required by Section 4 above, for the same type and grade of material (or for the same P-Number and Group Number in BPV Code, Section IX), and of the same thickness range, and that records of the tests are made available	**B-5** (a) One piece from each lot of material in each specification and grade including heat treatment [Note (4)] unless (b) Materials are qualified by the fabricator or erector as specified in items B-1 and 2 above, in which case the requirements of item A-5 apply
	Location and orientation of specimens	**6** (a) Weld metal: across the weld, with notch in the weld metal; notch axis shall be normal to material surface, with one face of specimen ≤ 1.5 mm ($^1/_{16}$ in.) from the material surface. (b) Heat affected zone (HAZ): across the weld and long enough to locate notch in the HAZ after etching; notch axis shall be approximately normal to material surface and shall include as much as possible of the HAZ in the fracture.	
	Tests by	**7** The fabricator or erector	

NOTES:

(1) A certified report of impact tests performed (after being appropriately heat treated as required by Table 323.2.2, item B-3) by the manufacturer shall be obtained as evidence that the material (including any welds used in its manufacture) meets the requirements of this Code and that

(a) the tests were conducted on specimens representative of the material delivered to and used by the fabricator or erector, or

(b) the tests were conducted on specimens removed from test pieces of the material which received heat treatment separately in the same manner as the material (including heat treatment by the manufacturer) so as to be representative of the finished piping

(2) If welding is used in manufacture, fabrication, or erection, tests of the HAZ will suffice for the tests of the base material.

(3) The test piece shall be large enough to permit preparing three specimens from the weld metal and three from the HAZ (if required) in accordance with para. 323.3. If this is not possible, preparation of additional test pieces is required.

(4) For purposes of this requirement, "lot" means the quantity of material described under the "Number of tests" provision of the specification applicable to the product term (i.e., plate, pipe, etc.) listed in para. 323.3.2.

Copyright © 2015 by the American Society of Mechanical Engineers.
No reproduction may be made of this material without written consent of ASME.

323.3.2 Procedure. Impact testing of each product form of material for any specification (including welds in the components) shall be done using procedures and apparatus in accordance with ASTM A370. For material forms that are represented by the ASTM specifications listed below, impact tests shall be conducted in conformance with those requirements as well. When conflicts exist between the specific requirements of this Code and the requirements of those specifications, the requirements of this Code shall take precedence.

Product Form	ASTM Spec. No.
Pipe	A333
Tube	A334
Fittings	A420
Forgings	A350
Castings	A352
Bolting	A320
Plate	A20

GENERAL NOTE: Titles of referenced standards not listed in the Specifications Index for Appendix A are A20 General Requirements for Steel Plates for Pressure Vessels and A370 Test Methods and Definitions for Mechanical Testing of Steel Products.

323.3.3 Test Specimens. Each set of impact test specimens shall consist of three specimen bars. All impact tests shall be made using standard 10 mm (0.394 in.) square cross section Charpy V-notch specimen bars, except when the material shape or thickness does not permit. Charpy impact tests may be performed on specimens of full material thickness, which may be machined to remove surface irregularities. Alternatively, such material may be reduced in thickness to produce the largest possible Charpy subsize specimen. See Table 323.3.4.

323.3.4 Test Temperatures. For all Charpy impact tests, the test temperature criteria in para. 323.3.4(a) or (b) shall be observed. The test specimens, as well as the handling tongs, shall be cooled for a sufficient length of time to reach the test temperature.

(a) For Materials of Thickness Equal to or Greater Than 10 mm (0.394 in.). Where the largest attainable Charpy V-notch specimen has a width along the notch of at least 8 mm (0.315 in.), the Charpy test using such a specimen shall be conducted at a temperature not higher than the design minimum temperature. Where the largest possible test specimen has a width along the notch less than 8 mm, the test shall be conducted at a temperature lower than the design minimum temperature by the amount shown in Table 323.3.4 for that specimen width.

(b) For Materials With Thickness Less Than 10 mm (0.394 in.). Where the largest attainable Charpy V-notch specimen has a width along the notch of at least 80% of the material thickness, the Charpy test of such a specimen shall be conducted at a temperature not higher than the design minimum temperature. Where the largest possible test specimen has a width along the notch of less than 80% of the material thickness, the test shall be conducted at a temperature lower than the design minimum temperature by an amount equal to the difference (referring to Table 323.3.4) between the temperature reduction corresponding to the actual material thickness and the temperature reduction corresponding to the Charpy specimen width actually tested.

Table 323.3.4 Charpy Impact Test Temperature Reduction

Actual Material Thickness [See Para. 323.3.4(b)] or Charpy Impact Specimen Width Along the Notch [Note (1)]		Temperature Reduction Below Design Minimum Temperature	
mm	in.	°C	°F
10 (full size standard bar)	0.394	0	0
9	0.354	0	0
8	0.315	0	0
7.5 (3/4 size bar)	0.295	2.8	5
7	0.276	4.4	8
6.67 (2/3 size bar)	0.262	5.6	10
6	0.236	8.3	15
5 (1/2 size bar)	0.197	11.1	20
4	0.157	16.7	30
3.33 (1/3 size bar)	0.131	19.4	35
3	0.118	22.2	40
2.5 (1/4 size bar)	0.098	27.8	50

GENERAL NOTE: These temperature reduction criteria do not apply when Table 323.3.5 specifies lateral expansion for minimum required values.

NOTE:

(1) Straight line interpolation for intermediate values is permitted.

323.3.5 Acceptance Criteria

(a) Minimum Energy Requirements. Except for bolting materials, the applicable minimum energy requirement for carbon and low alloy steels with specified minimum tensile strengths less than 656 MPa (95 ksi) shall be those shown in Table 323.3.5.

(b) Lateral Expansion Requirements. Other carbon and low alloy steels having specified minimum tensile strengths equal to or greater than 656 MPa (95 ksi), all bolting materials, and all high alloy steels (P-Nos. 6, 7, and 8) shall have a lateral expansion opposite the notch of not less than 0.38 mm (0.015 in.) for all specimen sizes. The lateral expansion is the increase in width of the broken impact specimen over that of the unbroken specimen measured on the compression side, parallel to the line constituting the bottom of the V-notch (see ASTM A370).

(c) Weld Impact Test Requirements. Where two base metals having different required impact energy values

Copyright © 2015 by the American Society of Mechanical Engineers.
No reproduction may be made of this material without written consent of ASME.

Table 323.3.5 Minimum Required Charpy V-Notch Impact Values

Specified Minimum Tensile Strength	No. of Specimens [Note (1)]	Energy [Note (2)]			
		Fully Deoxidized Steels		Other Than Fully Deoxidized Steels	
		Joules	ft-lbf	Joules	ft-lbf
(a) Carbon and Low Alloy Steels					
448 MPa (65 ksi) and less	Average for 3 specimens	18	13	14	10
	Minimum for 1 specimen	14	10	10	7
Over 448 to 517 MPa (75 ksi)	Average for 3 specimens	20	15	18	13
	Minimum for 1 specimen	16	12	14	10
Over 517 but not incl. 656 MPa (95 ksi)	Average for 3 specimens	27	20	. . .	. . .
	Minimum for 1 specimen	20	15	. . .	. . .
		Lateral Expansion			
656 MPa and over [Note (3)]	Minimum for 3 specimens	0.38 mm (0.015 in.)			
(b) Steels in P-Nos. 6, 7, and 8	Minimum for 3 specimens	0.38 mm (0.015 in.)			

NOTES:
(1) See para. 323.3.5(d) for permissible retests.
(2) Energy values in this Table are for standard size specimens. For subsize specimens, these values shall be multiplied by the ratio of the actual specimen width to that of a full-size specimen, 10 mm (0.394 in.).
(3) For bolting of this strength level in nominal sizes M 52 (2 in.) and under, the impact requirements of ASTM A320 may be applied. For bolting over M 52, requirements of this Table shall apply.

are joined by welding, the impact test energy requirements shall conform to the requirements of the base material having a specified minimum tensile strength most closely matching the specified minimum tensile strength of the weld metal.

(d) Retests

(1) For Absorbed Energy Criteria. When the average value of the three specimens equals or exceeds the minimum value permitted for a single specimen and the value for more than one specimen is below the required average value, or when the value for one specimen is below the minimum value permitted for a single specimen, a retest of three additional specimens shall be made. The value for each of these retest specimens shall equal or exceed the required average value.

(2) For Lateral Expansion Criterion. If the value of lateral expansion for one specimen in a group of three is below 0.38 mm (0.015 in.) but not below 0.25 mm (0.01 in.), and if the average value for three specimens equals or exceeds 0.38 mm (0.015 in.), a retest of three additional specimens may be made, each of which must equal or exceed the specified minimum value of 0.38 mm (0.015 in.). In the case of heat treated materials, if the required values are not obtained in the retest or if the values in the initial test are below the minimum allowed for retest, the material may be reheat treated and retested. After reheat treatment, a set of three specimens shall be made. For acceptance, the lateral expansion of each of the specimens must equal or exceed the specified minimum value of 0.38 mm (0.015 in.).

(3) For Erratic Test Results. When an erratic result is caused by a defective specimen or there is uncertainty in the test procedure, a retest will be allowed.

323.4 Fluid Service Requirements for Materials

323.4.1 General. Requirements in para. 323.4 apply to pressure-containing parts. They do not apply to materials used for supports, gaskets, packing, or bolting. See also Appendix F, para. F323.4.

323.4.2 Specific Requirements (14)

(a) Ductile Iron. Ductile iron shall not be used for pressure containing parts at temperatures below −29°C (−20°F) (except austenitic ductile iron) or above 343°C (650°F). Austenitic ductile iron conforming to ASTM A571 may be used at temperatures below −29°C (−20°F) down to the temperature of the impact test conducted in accordance with that specification but not below −196°C (−320°F).

Valves having bodies and bonnets or covers made of materials conforming to ASTM A395 and meeting the requirements of ASME B16.42 and additional requirements of ASME B16.34 Standard Class, API 594, API 599, or API 609 may be used within the pressure–temperature ratings given in ASME B16.42.

Copyright © 2015 by the American Society of Mechanical Engineers.
No reproduction may be made of this material without written consent of ASME.

Welding shall not be performed in the fabrication or repair of ductile iron components nor in assembly of such components in a piping system.

(b) Other Cast Irons. The following shall not be used under severe cyclic conditions. If safeguarding is provided against excessive heat and thermal shock and mechanical shock and abuse, they may be used in other services subject to the following requirements.

(1) Gray iron shall not be used above ground within process unit limits in hydrocarbon or other flammable fluid service at temperatures above 149°C (300°F) nor at gage pressures above 1 035 kPa (150 psi). In other locations the pressure limit shall be 2 760 kPa (400 psi).

(2) Malleable iron shall not be used in any fluid service at temperatures below −29°C (−20°F) or above 343°C (650°F) and shall not be used in flammable fluid service at temperatures above 149°C (300°F) nor at gage pressures above 2 760 kPa (400 psi).

(3) High silicon iron (14.5% Si) shall not be used in flammable fluid service. The manufacturer should be consulted for pressure–temperature ratings and for precautionary measures when using this material.

(c) Other Materials

(1) If welding or thermal cutting is performed on aluminum castings, the stress values in Appendix A and component ratings listed in Table 326.1 are not applicable. It is the designer's responsibility to establish such stresses and ratings consistent with the requirements of this Code.

(2) Lead and tin and their alloys shall not be used in flammable fluid services.

323.4.3 Cladding and Lining Materials. Materials with metallic cladding or metallic lining may be used in accordance with the following provisions:

(a) If piping components are made from integrally clad plate conforming to

(1) ASTM A263, Corrosion-Resisting Chromium Steel Clad Plate, Sheet, and Strip

(2) ASTM A264, Stainless Chromium-Nickel Steel Clad Plate, Sheet, and Strip

(3) ASTM A265, Nickel and Nickel-Base Alloy Clad Plate, Sheet, and Strip

Then pressure design in accordance with rules in para. 304 may be based upon the total thickness of base metal and cladding after any allowance for corrosion has been deducted, provided that both the base metal and the cladding metal are acceptable for Code use under para. 323.1, and provided that the clad plate has been shear tested and meets all shear test requirements of the applicable ASTM specification. The allowable stress for each material (base and cladding) shall be taken from Appendix A, or determined in accordance with the rules in para. 302.3, provided, however, that the allowable stress used for the cladding portion of the design thickness shall never be greater than the allowable stress used for the base portion.

(b) For all other metallic clad or lined piping components, the base metal shall be an acceptable Code material as defined in para. 323.1 and the thickness used in pressure design in accordance with para. 304 shall not include the thickness of the cladding or lining. The allowable stress used shall be that for the base metal at the design temperature. For such components, the cladding or lining may be any material that, in the judgment of the user, is suitable for the intended service and for the method of manufacture and assembly of the piping component.

(c) Except for components designed in accordance with provisions of para. 323 4.3(a), fluid service requirements for materials stated in this Code shall not restrict their use as cladding or lining in pipe or other components. Fluid service requirements for the outer material (including those for components and joints) shall govern, except that temperature limitations of both inner and outer materials, and of any bond between them, shall be considered.

(d) Fabrication by welding of clad or lined piping components and the inspection and testing of such components shall be done in accordance with applicable provisions of the BPV Code, Section VIII, Division 1, UCL-30 through UCL-52, or the provisions of Chapters V and VI of this Code, whichever are more stringent.

323.5 Deterioration of Materials in Service

Selection of material to resist deterioration in service is not within the scope of this Code. See para. 300(c)(6). Recommendations based on experience are presented for guidance in Appendix F, para. F323.

325 MATERIALS — MISCELLANEOUS

325.1 Joining and Auxiliary Materials

When selecting materials such as adhesives, cements, solvents, solders, brazing materials, packing, and O-rings for making or sealing joints, the designer shall consider their suitability for the fluid service. (Consideration should also be given to the possible effects of the joining or auxiliary materials on the fluid handled.)

Copyright © 2015 by the American Society of Mechanical Engineers.
No reproduction may be made of this material without written consent of ASME.

Chapter IV
Standards for Piping Components

326 DIMENSIONS AND RATINGS OF COMPONENTS

326.1 Dimensional Requirements

326.1.1 Listed Piping Components. Dimensional standards[1] for piping components are listed in Table 326.1. Dimensional requirements contained in specifications listed in Appendix A shall also be considered requirements of this Code.

326.1.2 Unlisted Piping Components. Piping components not listed in Table 326.1 or Appendix A shall meet the pressure design requirements described in para. 302.2.3 and the mechanical strength requirements described in para. 302.5.

326.1.3 Threads. The dimensions of piping connection threads not otherwise covered by a governing component standard or specification shall conform to the requirements of applicable standards listed in Table 326.1 or Appendix A.

[1]It is not practical to refer to a specific edition of each standard throughout the Code text. Instead, the approved edition references, along with the names and address of sponsoring organizations, are shown in Appendix E.

326.2 Ratings of Components

326.2.1 Listed Components. The pressure–temperature ratings of components listed in Table 326.1 are accepted for pressure design in accordance with para. 303.

326.2.2 Unlisted Components. The pressure–temperature ratings of unlisted piping components shall conform to the applicable provisions of para. 304.

326.3 Reference Documents

The documents listed in Table 326.1 contain references to codes, standards, and specifications not listed in Table 326.1. Such unlisted codes, standards, and specifications shall be used only in the context of the listed documents in which they appear.

The design, materials, fabrication, assembly, examination, inspection, and testing requirements of this Code are not applicable to components manufactured in accordance with the documents listed in Table 326.1, unless specifically stated in this Code, or the listed document.

Copyright © 2015 by the American Society of Mechanical Engineers.
No reproduction may be made of this material without written consent of ASME.

Table 326.1 Component Standards (14)

Standard or Specification	Designation
Bolting	
Square and Hex Bolts and Screws (Inch Series)	ASME B18.2.1
Square and Hex Nuts (Inch Series)	ASME B18.2.2
Metallic Fittings, Valves, and Flanges	
Gray Iron Pipe Flanges and Flanged Fittings	ASME B16.1
Malleable Iron Threaded Fittings	ASME B16.3
Gray Iron Threaded Fittings	ASME B16.4
Pipe Flanges and Flanged Fittings	ASME B16.5
Factory-Made Wrought Steel Buttwelding Fittings	ASME B16.9
Face-to-Face and End-To-End Dimensions of Valves	ASME B16.10
Forged Fittings, Socket-Welding and Threaded	ASME B16.11
Ferrous Pipe Plugs, Bushings, and Locknuts With Pipe Threads	ASME B16.14
Cast Bronze Threaded Fittings, Class 125 and 250 [Note (1)]	ASME B16.15
Cast Copper Alloy Solder Joint Pressure Fittings	ASME B16.18
Wrought Copper and Copper Alloy Solder Joint Pressure Fittings	ASME B16.22
Cast Copper Alloy Pipe Flanges and Flanged Fittings: Classes 150, 300, 600, 900, 1500, and 2500	ASME B16.24
Cast Copper Alloy Fittings for Flared Copper Tubes	ASME B16.26
Valves-Flanged, Threaded, and Welding End	ASME B16.34
Orifice Flanges, Class 300, 600, 900, 1500, and 2500	ASME B16.36
Malleable Iron Threaded Pipe Unions, Class 150, 250, and 300	ASME B16.39
Ductile Iron Pipe Flanges and Flanged Fittings, Class 150 and 300	ASME B16.42
Large Diameter Steel Flanges, NPS 26 Through NPS 60	ASME B16.47
Steel Line Blanks	ASME B16.48
Brazing Joints for Copper and Copper Alloy Pressure Fittings	ASME B16.50
Bioprocessing Equipment [Note (2)]	ASME BPE
Pipeline Valves [Note (3)]	API 6D
Flanged Steel Pressure-Relief Valves	API 526
Check Valves: Flanged, Lug, Wafer and Butt-welding	API 594
Metal Plug Valves—Flanged, Threaded, and Welding Ends	API 599
Bolted Bonnet Steel Gate Valves for Petroleum and Natural Gas Industries	API 600
Steel Gate, Globe, and Check Valves for Sizes DN 100 and Smaller for the Petroleum and Natural Gas Industries	API 602
Corrosion-Resistant, Bolted Bonnet Gate Valves — Flanged and Butt-Welding Ends	API 603
Metal Ball Valves-Flanged, Threaded, and Welding End	API 608
Butterfly Valves: Double-flanged, Lug- and Wafer-type	API 609
Ductile-Iron and Gray-Iron Fittings, 3 Inch Through 48 Inch (75 mm Through 1200 mm), for Water and Other Liquids	AWWA C110
Flanged Ductile-Iron Pipe with Ductile-Iron or Gray-Iron Threaded Flanges	AWWA C115
Steel Pipe Flanges for Waterworks Service, Sizes 4 inch Through 144 inch (100 mm Through 3,600 mm)	AWWA C207
Dimensions for Fabricated Steel Water Pipe Fittings	AWWA C208
Metal-Seated Gate Valves for Water Supply Service	AWWA C500
Rubber-Seated Butterfly Valves	AWWA C504
Standard Finishes for Contact Faces of Pipe Flanges and Connecting-End Flanges of Valves and Fittings	MSS SP-6
Spot Facing for Bronze, Iron and Steel Flanges	MSS SP-9
Standard Marking Systems for Valves, Fittings, Flanges, and Unions	MSS SP-25
Class 150 (PN 20) Corrosion Resistant Gate, Globe, Angle and Check Valves With Flanged and Butt Weld Ends	MSS SP-42
Wrought Stainless Steel Butt-Welding Fittings Including Reference to Other Corrosion Resistant Materials [Note (4)]	MSS SP-43
Steel Pipeline Flanges	MSS SP-44
Bypass and Drain Connections	MSS SP-45
Class 150LW Corrosion Resistant Flanges and Cast Flanged Fittings	MSS SP-51
High Pressure Chemical Industry Flanges and Threaded Stubs for Use with Lens Gaskets	MSS SP-65
Gray Iron Gate Valves, Flanged and Threaded Ends	MSS SP-70
Gray Iron Swing Check Valves, Flanged and Threaded Ends	MSS SP-71
Ball Valves With Flanged or Buttwelding Ends for General Service	MSS SP-72
Specifications for High Test Wrought Buttwelding Fittings	MSS SP-75
Gray Iron Plug Valves, Flanged and Threaded Ends	MSS SP-78
Socket-Welding Reducer Inserts	MSS SP-79
Bronze Gate, Globe, Angle and Check Valves	MSS SP-80

Copyright © 2015 by the American Society of Mechanical Engineers.
No reproduction may be made of this material without written consent of ASME.

(14)

Table 326.1 Component Standards (Cont'd)

Standard or Specification	Designation
Metallic Fittings, Valves, and Flanges (Cont'd)	
Stainless Steel, Bonnetless, Flanged, Knife Gate Valves	MSS SP-81
Class 3000 Steel Pipe Unions, Socket-Welding and Threaded	MSS SP-83
Gray Iron Globe and Angle Valves, Flanged and Threaded Ends	MSS SP-85
Diaphragm Type Valves	MSS SP-88
Swage(d) Nipples and Bull Plugs	MSS SP-95
Integrally Reinforced Forged Branch Outlet Fittings — Socket Welding, Threaded, and Buttwelding Ends	MSS SP-97
Instrument Valves for Code Applications	MSS SP-105
Cast Copper Alloy Flanges and Flanged Fittings Class 125, 150, and 300	MSS SP-106
Factory-Made Wrought Belled End Socket Welding Fittings [Note (5)]	MSS SP-119
Refrigeration Tube Fittings — General Specifications	SAE J513
Hydraulic Tube Fittings	SAE J514
Hydraulic Flanged Tube, Pipe, and Hose Connections, Four-Bolt Split Flanged Type	SAE J518
Metallic Pipe and Tubes [Note (6)]	
Welded and Seamless Wrought Steel Pipe	ASME B36.10M
Stainless Steel Pipe	ASME B36.19M
Flanged Ductile-Iron Pipe with Ductile-Iron or Gray-Iron Threaded Flanges	AWWA C115
Thickness Design of Ductile-Iron Pipe	AWWA C150
Ductile-Iron Pipe, Centrifugally Cast, for Water	AWWA C151
Steel Water Pipe 6 inches (150 mm) and Larger	AWWA C200
Miscellaneous	
Unified Inch Screw Threads (UN and UNR Thread Form)	ASME B1.1
Pipe Threads, General Purpose (Inch)	ASME B1.20.1
Dryseal Pipe Threads (Inch)	ASME B1.20.3
Hose Coupling Screw Threads (Inch)	ASME B1.20.7
Metallic Gaskets for Pipe Flanges — Ring: Joint, Spiral Wound, and Jacketed	ASME B16.20
Nonmetallic Flat Gaskets for Pipe Flanges	ASME B16.21
Buttwelding Ends	ASME B16.25
Surface Texture (Surface Roughness, Waviness, and Lay)	ASME B46.1
Thermowells [Note (7)]	ASME PTC 19.3 TW
Specification for Threading, Gaging and Thread Inspection of Casing, Tubing, and Line Pipe Threads	API 5B
Rubber Gasket Joints for Ductile-Iron Pressure Pipe and Fittings	AWWA C111
Grooved and Shouldered Joints [Note (8)]	AWWA C606
Flexible Metal Hose [Notes (9) and (10)]	BS 6501, Part 1
Pipe Hangers and Supports — Materials, Design, and Manufacture	MSS SP-58
Standard for Fire Hose Connections	NFPA 1963

GENERAL NOTES:

(a) It is not practical to refer to a specific edition of each standard throughout the Code text. Instead, the approved edition references, along with the names and addresses of the sponsoring organizations, are shown in Appendix E.

(b) Many of the listed standards allow the use of unlisted materials; see para. 323.1.2.

NOTES:

(1) This standard allows straight pipe threads in sizes ≤ DN 15 (NPS $\frac{1}{2}$); see para. 314.2.1(d).

(2) Part DT of ASME BPE covers dimensions and tolerances for stainless steel automatic welding and hygienic clamp tube fittings and process components.

(3) API 6D allows design and calculations for pressure-containing elements to be in accordance with various internationally recognized design codes or standards. Only API 6D valves with design and calculations for pressure-containing elements in accordance with ASME B16.34 are considered a "listed component" for the purpose of this Code.

(4) *Cautionary Note:* See MSS SP-43 (Section 3) for specific pressure–temperature ratings of available thicknesses of Class CR fittings. The ratings for MSS SP-43 fittings cannot be calculated based on straight seamless pipe such as is done, for example, for ASME B16.9 buttwelding fittings.

Copyright © 2015 by the American Society of Mechanical Engineers.
No reproduction may be made of this material without written consent of ASME.

Table 326.1 Component Standards (Cont'd) (14)

NOTES (Cont'd):

(5) MSS SP-119 includes three classes of fittings: MP, MARINE, and CR. Only the MP class fittings are considered a "Listed Component" for the purpose of this Code. *Cautionary Note*: See MSS SP-119 (Section 6) for special provisions concerning ratings. (In accordance with MSS SP-119, the pressure ratings for MP class fittings are 87.5% of those calculated for straight seamless pipe of *minimum* wall thickness.)

(6) See also Appendix A.

(7) ASME PTC 19.3 TW allows mechanical design of thermowells to be in accordance with various design codes. Only PTC 19.3 TW thermowells with design and calculations for pressure-containing elements in accordance with ASME B31.3 are considered a "listed component" for the purpose of this Code.

(8) For use with this Code, the rated pressure of components covered by this standard shall be based on no greater than one-third the hydrostatic test failure pressure (the pressure at fracture or leakage), rather than one-half the hydrostatic test failure pressure specified in AWWA C606.

(9) Welding and brazing to be in accordance with paras. 328 and 333, respectively in lieu of the referenced specifications in this standard.

(10) This standard contains recommended materials of construction for certain chemical services; the responsibility for the ultimate selection of material is the responsibility of the Owner and is, therefore, not within the scope of this Code.

Copyright © 2015 by the American Society of Mechanical Engineers.
No reproduction may be made of this material without written consent of ASME.

Chapter V
Fabrication, Assembly, and Erection

327 GENERAL

Metallic piping materials and components are prepared for assembly and erection by one or more of the fabrication processes covered in paras. 328, 330, 331, 332, and 333. When any of these processes is used in assembly or erection, requirements are the same as for fabrication.

328 WELDING AND BRAZING

Welding and brazing shall conform to the requirements of this Chapter and the applicable requirements of para. 311.2.

328.1 Responsibility

Each employer is responsible for

(a) the welding and brazing performed by personnel of its organization

(b) conducting the qualification tests required to qualify the welding or brazing procedure specifications used by personnel in its organization, except as provided in paras. 328.2.1 and 328.2.2

(c) conducting the qualification tests required to qualify the welders, brazers, and operators, except as provided in para. 328.2.3

328.2 Welding and Brazing Qualification

Welding and brazing procedure specifications (WPSs and BPSs) to be followed in production welding shall be prepared and qualified, and welders, brazers, and operators shall be qualified as required by the ASME BPV Code, Section IX except as modified by para. 333 for brazing of Category D Fluid Service piping and by the following subparagraphs.

328.2.1 Standard Welding Procedure Specifications. Standard welding procedure specifications published by the American Welding Society and listed in Mandatory Appendix E of Section IX are permitted for Code construction within the limitations established by Article V of Section IX.

328.2.2 Procedure Qualification by Others. In order to avoid duplication of effort and subject to the approval of the owner, WPSs and BPSs qualified by a technically competent group or agency may be used provided the following are met:

(a) The procedures meet the requirements of Section IX and any additional qualification requirements of this Code.

(b) The employer has qualified at least one welder, brazer, or operator following each WPS or BPS.

(c) The employer's business name shall be shown on each WPS and BPS, and on each qualification record. In addition, qualification records shall be signed and dated by the employer, thereby accepting responsibility for the qualifications performed by others.

328.2.3 Performance Qualification by Others. In order to avoid duplication of effort and subject to the approval of the owner, an employer may accept the performance qualification of a welder, brazer, or operator made by a previous employer. This acceptance is limited to performance qualifications that were made on pipe or tube test coupons. The new employer shall have the WPS or BPS that was followed during qualification or an equivalent WPS or BPS that is within the limits of the essential variables set forth in Section IX. An employer accepting such qualification tests shall obtain a copy of the performance qualification test record from the previous employer. The record shall show the name of the employer by whom the welder, brazer, or operator was qualified and the date of that qualification. Evidence shall also be provided that the welder, brazer, or operator has maintained qualification in accordance with QW-322 and QB-322 of Section IX, except that this evidence may be provided by an employer responsible for the individual's welding or brazing performance even if not the original qualifying employer. The new employer's business name shall be shown on the qualification record, and it shall be signed and dated by the employer, thereby accepting responsibility for the qualifications performed by others.

328.2.4 Qualification Records. The employer shall maintain copies of the procedure and performance qualification records specified by Section IX that shall be available to the Inspector at the location where welding is being done.

328.3 Welding Materials

328.3.1 Electrodes and Filler Metal. Welding electrodes and filler metal, including consumable inserts, shall conform to the requirements of the ASME Boiler and Pressure Vessel Code, Section II, Part C. An electrode or filler metal not conforming to the above may be used provided the WPS and the welders who will follow the WPS have been qualified as required by ASME Section IX. Unless otherwise specified by the

Copyright © 2015 by the American Society of Mechanical Engineers.
No reproduction may be made of this material without written consent of ASME.

Designer, welding electrodes and filler metals used shall produce weld metal that complies with the following:

(a) The nominal tensile strength of the weld metal shall equal or exceed the minimum specified tensile strength of the base metals being joined, or the weaker of the two if base metals of two different strengths are being joined.

(b) The nominal chemical analysis of the weld metal shall be similar to the nominal chemical analysis of the major alloying elements of the base metal (e.g., $2\frac{1}{4}$% Cr, 1% Mo steels should be joined using $2\frac{1}{4}$% Cr, 1% Mo filler metals).

(c) If base metals of different chemical analysis are being joined, the nominal chemical analysis of the weld metal shall be similar to either base metal or an intermediate composition, except as specified below for austenitic steels joined to ferritic steels.

(d) When austenitic steels are joined to ferritic steels, the weld metal shall have a predominantly austenitic microstructure.

(e) For nonferrous metals, the weld metal shall be that recommended by the manufacturer of the nonferrous base metal or by industry associations for that metal.

328.3.2 Weld Backing Material. When backing rings are used, they shall conform to the following:

(a) Ferrous Metal Backing Rings. These shall be of weldable quality. Sulfur content shall not exceed 0.05%.

(b) If two abutting surfaces are to be welded to a third member used as a backing ring and one or two of the three members are ferritic and the other member or members are austenitic, the satisfactory use of such materials shall be demonstrated by welding procedure qualified as required by para. 328.2.

Backing rings may be of the continuous machined or split-band type. Some commonly used types are shown in Fig. 328.3.2.

(c) Nonferrous and Nonmetallic Backing Rings. Backing rings of nonferrous or nonmetallic material may be used, provided the designer approves their use and the welding procedure using them is qualified as required by para. 328.2.

328.3.3 Consumable Inserts. Consumable inserts may be used, provided they are of the same nominal composition as the filler metal, will not cause detrimental alloying of the weld metal, and the welding procedure using them is qualified as required by para. 328.2. Some commonly used types are shown in Fig. 328.3.2.

328.4 Preparation for Welding

328.4.1 Cleaning. Internal and external surfaces to be thermally cut or welded shall be clean and free from paint, oil, rust, scale, and other material that would be detrimental to either the weld or the base metal when heat is applied.

328.4.2 End Preparation

(a) General

(1) End preparation is acceptable only if the surface is reasonably smooth and true, and slag from oxygen or arc cutting is cleaned from thermally cut surfaces. Discoloration remaining on a thermally cut surface is not considered detrimental oxidation.

(2) End preparation for groove welds specified in ASME B16.25, or any other that meets the WPS, is acceptable. [For convenience, the basic bevel angles of ASME B16.25 and some additional J-bevel angles are shown in Fig. 328.4.2, illustrations (a) and (b).]

(b) Circumferential Welds

(1) If component ends are trimmed as shown in Fig. 328.3.2, illustration (a) or (b) to fit backing rings or consumable inserts, or as shown in Fig. 328.4.3, illustration (a) or (b) to correct internal misalignment, such trimming shall not reduce the finished wall thickness below the required minimum wall thickness, t_m.

(2) Component ends may be bored to allow for a completely recessed backing ring, provided the remaining net thickness of the finished ends is not less than t_m.

(3) It is permissible to size pipe ends of the same nominal size to improve alignment if wall thickness requirements are maintained.

(4) Where necessary, weld metal may be deposited inside or outside of the component to permit alignment or provide for machining to ensure satisfactory seating of rings or inserts.

(5) When a girth or miter groove weld joins components of unequal wall thickness and one is more than $1\frac{1}{2}$ times the thickness of the other, end preparation and geometry shall be in accordance with acceptable designs for unequal wall thickness in ASME B16.25.

(6) Buttweld fittings manufactured in accordance with ASME B16.9 may be trimmed to produce an angular joint offset in their connections to pipe or to other buttweld fittings without being subject to design qualifications in accordance with para. 304.7.2 provided the total angular offset produced between the two jointed parts does not exceed 3 deg.

328.4.3 Alignment

(a) Circumferential Welds

(1) Inside surfaces of components at ends to be joined in girth or miter groove welds shall be aligned within the dimensional limits in the WPS and the engineering design.

(2) If the external surfaces of the components are not aligned, the weld shall be tapered between them.

(b) Longitudinal Welds. Alignment of longitudinal groove welds (not made in accordance with a standard listed in Table A-1 or Table 326.1) shall conform to the requirements of para. 328.4.3(a).

Copyright © 2015 by the American Society of Mechanical Engineers.
No reproduction may be made of this material without written consent of ASME.

Fig. 328.3.2 Typical Backing Rings and Consumable Inserts

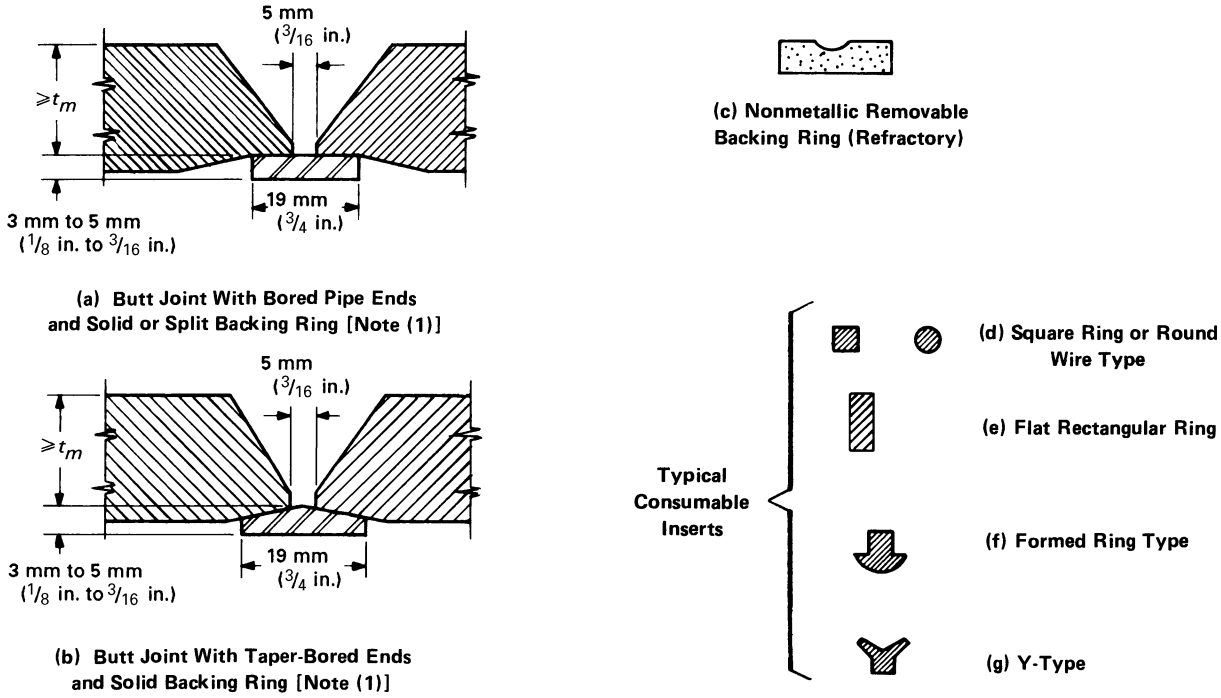

NOTE:
(1) Refer to ASME B16.25 for detailed dimensional information on welding ends.

Fig. 328.4.2 Typical Butt Weld End Preparation

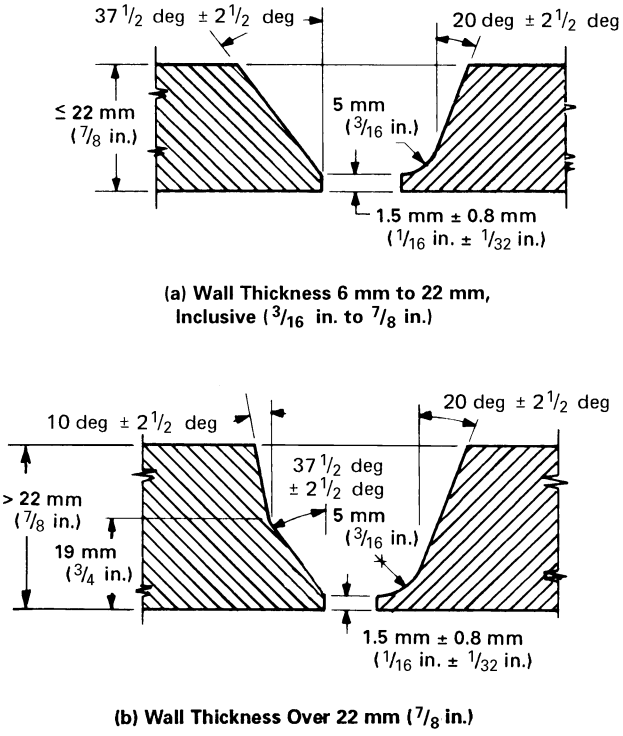

Fig. 328.4.3 Trimming and Permitted Misalignment

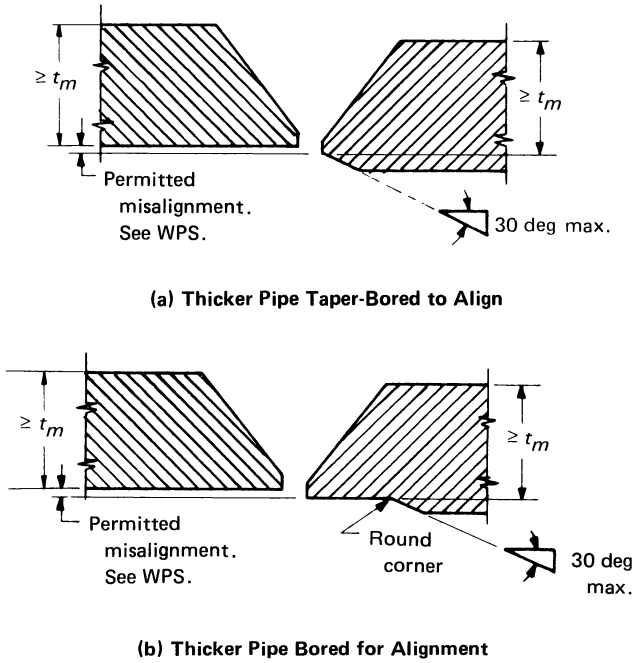

Copyright © 2015 by the American Society of Mechanical Engineers.
No reproduction may be made of this material without written consent of ASME.

Fig. 328.4.4 Preparation for Branch Connections

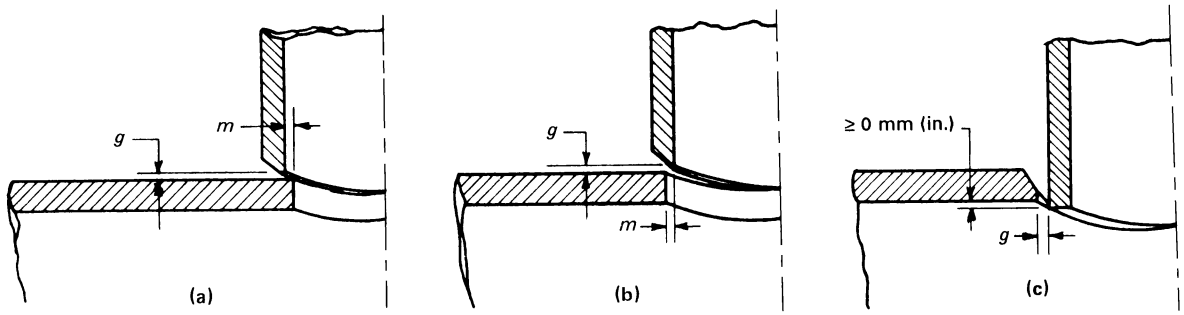

g = root gap per welding specification
m = the lesser of 3.2 mm ($^1/_8$ in.) or 0.5 $\overline{T}_b$

(c) Branch Connection Welds

(1) Branch connections that abut the outside surface of the run pipe shall be contoured for groove welds that meet the WPS requirements [see Fig. 328.4.4, illustrations (a) and (b)].

(2) Branch connections that are inserted through a run opening shall be inserted at least as far as the inside surface of the run pipe at all points [see Fig. 328.4.4, illustration (c)] and shall otherwise conform to para. 328.4.3(c)(1).

(3) Run openings for branch connections shall not deviate from the required contour more than the dimension m in Fig. 328.4.4. In no case shall deviations of the shape of the opening cause the root spacing tolerance limits in the WPS to be exceeded. Weld metal may be added and refinished if necessary for compliance.

(d) Spacing. The root opening of the joint shall be within the tolerance limits in the WPS.

328.5 Welding Requirements

328.5.1 General

(a) Welds, including addition of weld metal for alignment [paras. 328.4.2(b)(4) and 328.4.3(c)(3)], shall be made in accordance with a qualified procedure and by qualified welders or welding operators.

(b) Each qualified welder and welding operator shall be assigned an identification symbol. Unless otherwise specified in the engineering design, each pressure-containing weld or adjacent area shall be marked with the identification symbol of the welder or welding operator. In lieu of marking the weld, appropriate records shall be filed.

(c) Tack welds at the root of the joint shall be made with filler metal equivalent to that used in the root pass. Tack welds shall be made by a qualified welder or welding operator. Tack welds shall be fused with the root pass weld, except that those that have cracked shall be removed. Bridge tacks (above the weld) shall be removed.

(d) Peening is prohibited on the root pass and final pass of a weld.

(e) No welding shall be done if there is impingement on the weld area of rain, snow, sleet, or excessive wind, or if the weld area is frosted or wet.

(f) Welding End Valves. The welding sequence and procedure and any heat treatment for a welding end valve shall be such as to preserve the seat tightness of the valve.

328.5.2 Fillet and Socket Welds. Fillet welds (including socket welds) may vary from convex to concave. The size of a fillet weld is determined as shown in Fig. 328.5.2A.

(a) Typical weld details for slip-on and socket welding flanges are shown in Fig. 328.5.2B; minimum welding dimensions for other socket welding components are shown in Fig. 328.5.2C or MSS SP-119.

(b) If slip-on flanges are single welded, the weld shall be at the hub.

328.5.3 Seal Welds. Seal welding shall be done by a qualified welder. Seal welds shall cover all exposed threads.

328.5.4 Welded Branch Connections (14)

(a) Figures 328.5.4A through 328.5.4F show acceptable details of branch connections with and without added reinforcement, in which the branch pipe is connected directly to the run pipe. The illustrations are typical and are not intended to exclude acceptable types of construction not shown.

(b) Figure 328.5.4D shows basic types of weld attachments used in the fabrication of branch connections. The location and minimum size of attachment welds shall conform to the requirements herein. Welds shall be calculated in accordance with para. 304.3.3 but shall be not less than the sizes shown in Fig. 328.5.4D. Figure 328.5.4F shows the basic types of attachment welds used with integrally reinforced branch connection fittings. The

Copyright © 2015 by the American Society of Mechanical Engineers.
No reproduction may be made of this material without written consent of ASME.

Fig. 328.5.2A Fillet Weld Size

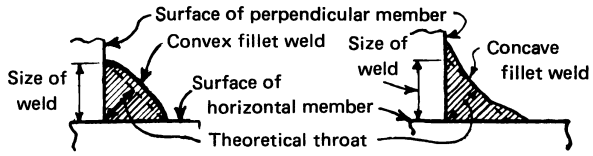

Equal Leg Fillet Weld

GENERAL NOTE: The size of an equal leg fillet weld is the leg length of the largest inscribed isosceles right triangle (theoretical throat = 0.707 × size).

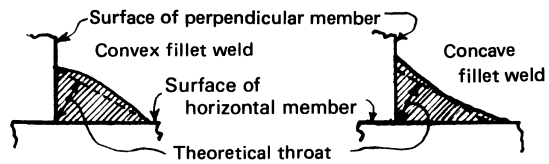

Unequal Leg Fillet Weld

GENERAL NOTE: The size of unequal leg fillet weld is the leg lengths of the largest right triangle which can be inscribed within the weld cross section [e.g., 13 mm × 19 mm (1/2 in. × 3/4 in.)].

Fig. 328.5.2B Typical Details for Double-Welded Slip-On and Socket Welding Flange Attachment Welds

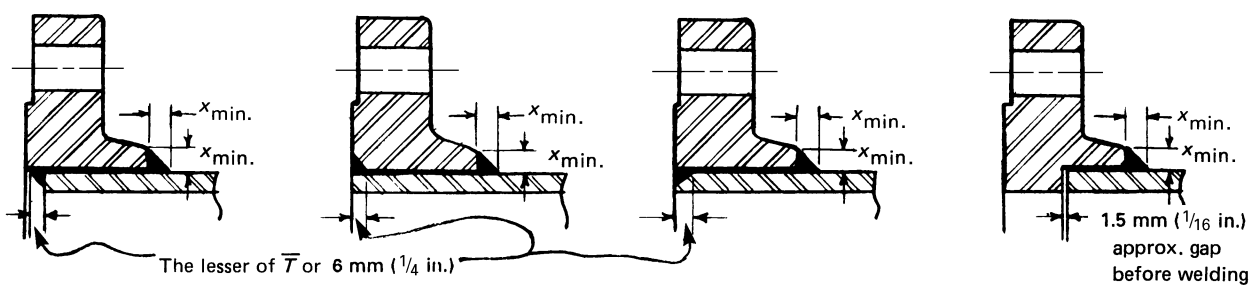

(1) Front and Back Welds **(2) Face and Back Welds** **(3) Socket Welding Flange**

$X_{min.}$ = the lesser of $1.4\overline{T}$ or the thickness of the hub

Fig. 328.5.2C Minimum Welding Dimensions for Socket Welding Components Other Than Flanges

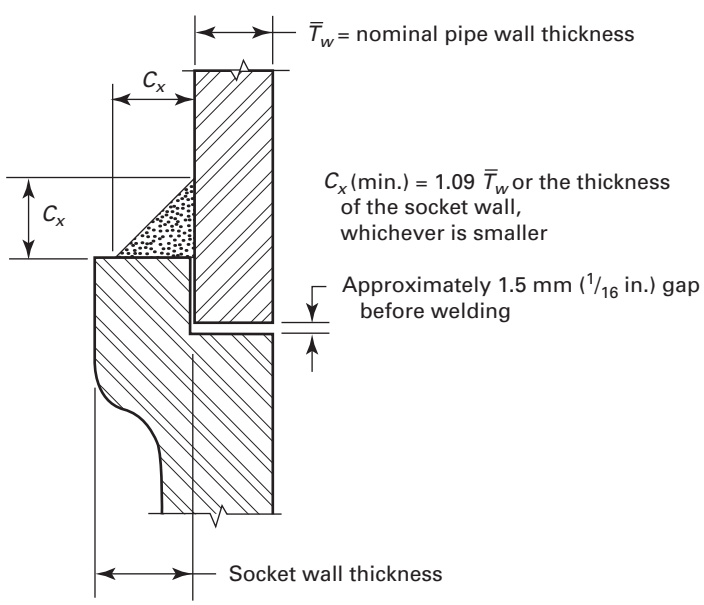

Copyright © 2015 by the American Society of Mechanical Engineers.
No reproduction may be made of this material without written consent of ASME.

Figs. 328.5.4A, B, C Typical Welded Branch Connections

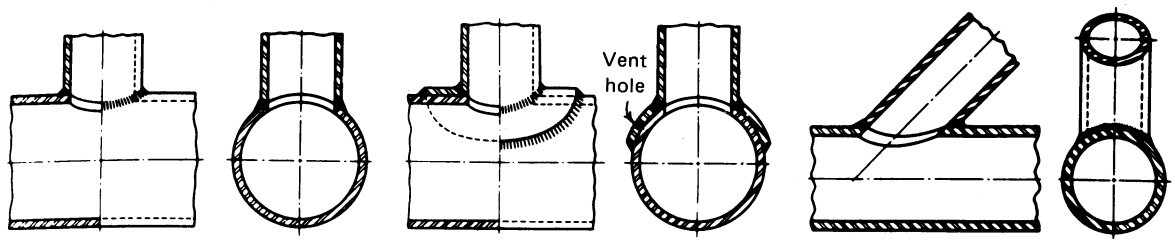

(a) Without Added Reinforcement

(b) With Added Reinforcement

(c) Angular Branch Without Added Reinforcement

Fig. 328.5.4D Acceptable Details for Branch Attachment Welds

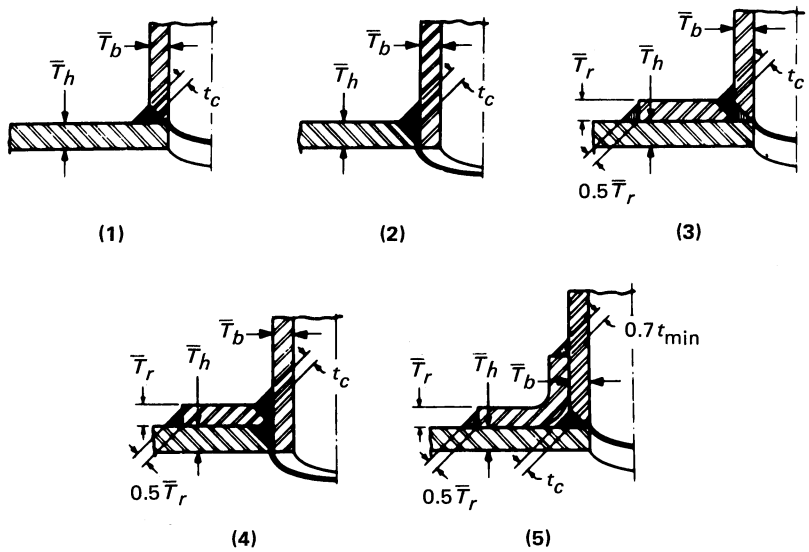

GENERAL NOTE: These sketches show minimum acceptable welds. Welds may be larger than those shown here.

Fig. 328.5.4E Acceptable Details for Branch Attachment Suitable for 100% Radiography

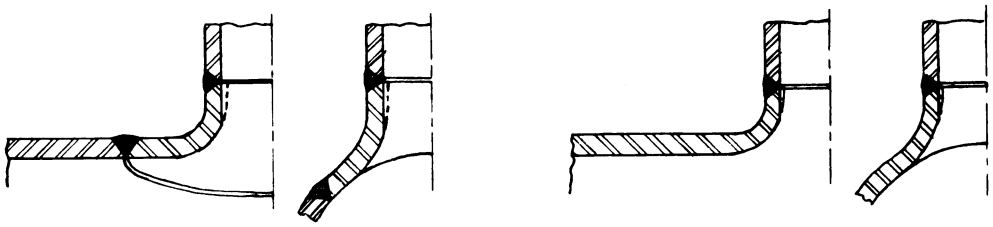

(1) Contour Outlet Fitting

(2) Extruded Header Outlet

Copyright © 2015 by the American Society of Mechanical Engineers.
No reproduction may be made of this material without written consent of ASME.

(14) **Fig. 328.5.4F Acceptable Details for Integrally Reinforced Branch Connections**

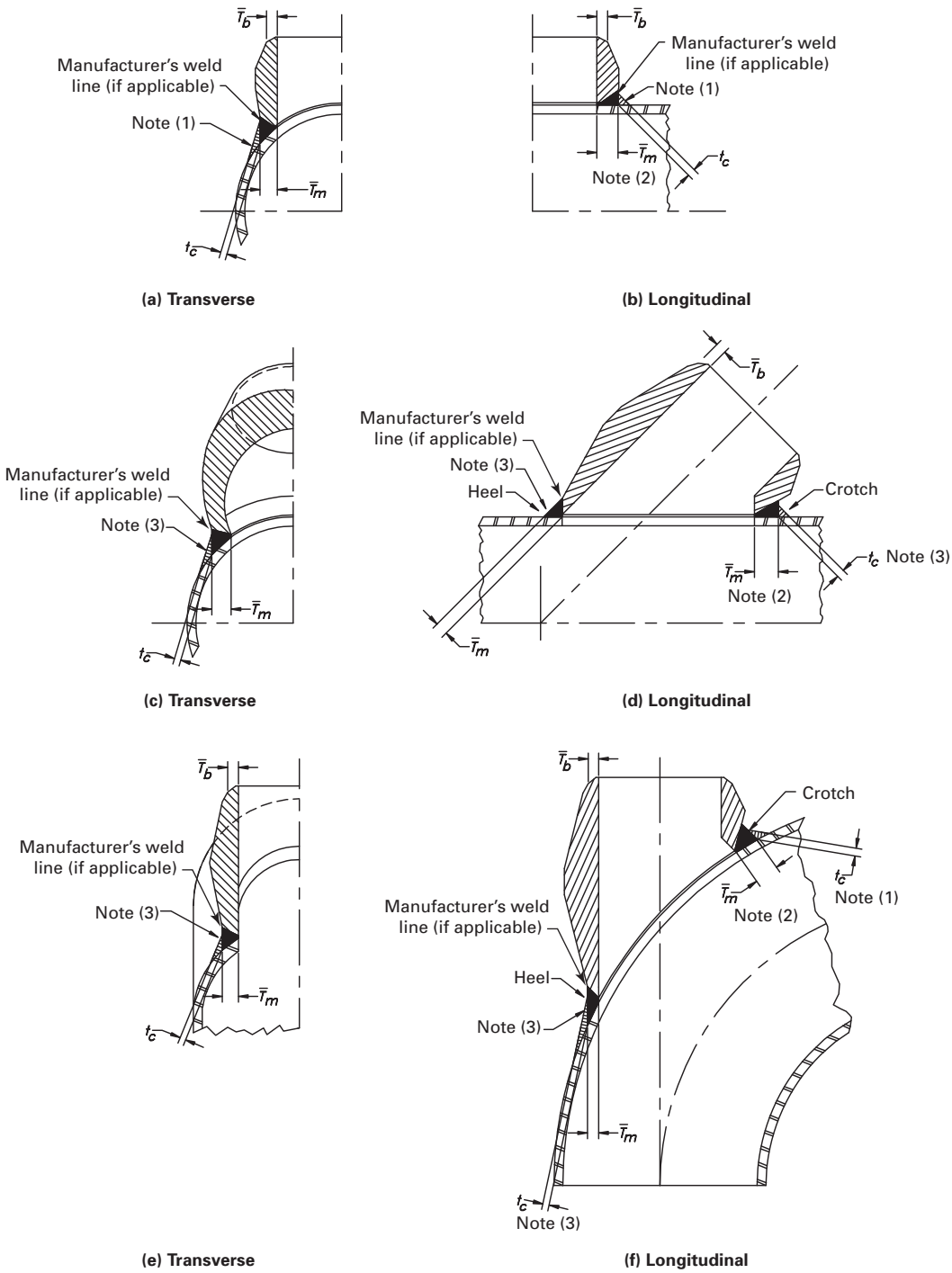

GENERAL NOTE: Welds shall be in accordance with para. 328.5.4(i).

NOTES:

(1) Cover fillet weld shall provide a smooth transition to the run pipe with an equal leg fillet at the longitudinal section to an equal leg fillet, unequal (oblique) leg fillet, or groove butt joint at the transverse section (depending on branch connection size).

(2) Heat treatment requirements shall be in accordance with para. 331.1.3(a).

(3) Cover fillet weld shall provide a smooth transition to the run pipe with an equal leg fillet at the crotch in the longitudinal section to an equal leg filet, unequal (oblique) leg fillet, or groove butt joint at the transverse section (depending on branch connection size) to nothing at the heel of the branch connection fitting in the longitudinal section.

Copyright © 2015 by the American Society of Mechanical Engineers.
No reproduction may be made of this material without written consent of ASME.

location and the minimum size of the attachment welds shall conform to the requirements of subpara. (i) below.

(c) The nomenclature and symbols used herein, in Fig. 328.5.4D, and in Fig. 328.5.4F are

$\overline{T}_b$ = nominal thickness of branch

$\overline{T}_h$ = nominal thickness of header

$\overline{T}_m$ = nominal thickness of the branch weld for integrally reinforced branch connection fittings, either

(1) as specified by the manufacturer of the branch connection fitting

(2) the full depth of the resultant weld groove, after fit-up, if no manufacturer's weld thickness is specified

(3) as documented and specified in the engineering design in accordance with para. 300(c)(3), or

(4) calculated and documented in accordance with the requirements of para. 304.7.2

$\overline{T}_r$ = nominal thickness of reinforcing pad or saddle

t_c = lesser of $0.7\overline{T}_b$ or 6 mm (¼ in.)

$t_{\min}$ = lesser of $\overline{T}_b$ or $\overline{T}_r$

(d) Branch connections, including branch connection fittings (see paras. 300.2 and 304.3.2), that abut the outside of the run or that are inserted in an opening in the run shall be attached by fully penetrated groove welds. The welds shall be finished with cover fillet welds having a throat dimension not less than t_c. See Fig. 328.5.4D, illustrations (1) and (2).

(e) A reinforcing pad or saddle shall be attached to the branch pipe by either

(1) a fully penetrated groove weld finished with a cover fillet weld having a throat dimension not less than t_c, or

(2) a fillet weld having a throat dimension not less than $0.7t_{\min}$. See Fig. 328.5.4D, illustration (5).

(f) The outer edge of a reinforcing pad or saddle shall be attached to the run pipe by a fillet weld having a throat dimension not less than $0.5\overline{T}_r$. See Fig. 328.5.4D, illustrations (3), (4), and (5).

(g) Reinforcing pads and saddles shall have a good fit with the parts to which they are attached. A vent hole shall be provided at the side (not at the crotch) of any pad or saddle to reveal leakage in the weld between branch and run and to allow venting during welding and heat treatment. A pad or saddle may be made in more than one piece if joints between pieces have strength equivalent to pad or saddle parent metal, and if each piece has a vent hole.

(h) Examination and any necessary repairs of the completed weld between branch and run shall be made before adding a pad or saddle.

(i) Figure 328.5.4F shows additional integrally reinforced branch connections typical of MSS SP-97 fittings that abut the outside of the run attached by a full penetration groove weld. The welds shall be finished with cover fillets having a throat dimension not less than t_c. The cover fillet weld shall fill and smoothly transition to the attachment weld and run pipe or fitting.

328.5.5 Fabricated Laps. Figure 328.5.5 shows typical fabricated laps. Fabrication shall be in accordance with the applicable requirements of para. 328.5.4.

328.5.6 Welding for Severe Cyclic Conditions. A welding procedure shall be employed that provides a smooth, regular, fully penetrated inner surface.

328.6 Weld Repair

A weld defect to be repaired shall be removed to sound metal. Repair welds shall be made using a welding procedure qualified in accordance with para. 328.2.1, recognizing that the cavity to be repaired may differ in contour and dimensions from the original joint. Repair welds shall be made by welders or welding operators qualified in accordance with para. 328.2.1. Preheating and heat treatment shall be as required for the original welding. See also para. 341.3.3.

328.7 Attachment Welds (14)

Structural attachments may be made by complete penetration, partial penetration, or fillet welds.

Low energy capacitor discharge welding may be used for welding temporary attachments (e.g., thermocouples) and permanent nonstructural attachments without preheat above 10°C (50°F) or subsequent postweld heat treatment on P-No. 1 through P-No. 5B and P-No. 15E materials, provided

(a) a Welding Procedure Specification is prepared, describing the low energy capacitor discharge equipment, the combination of materials to be joined, and the technique of application; qualification of the welding procedure is not required

(b) the energy output of the welding process is limited to 125 W-sec

(c) for P-No. 5A, P-No. 5B, and P-No. 15E materials, the maximum carbon content of the material is 0.15%

(d) after thermocouples are removed, the areas shall be visually examined for evidence of defects to be repaired

330 PREHEATING (14)

330.1 General

The preheat requirements herein apply to all types of welding, including tack welds, repair welds, and seal welds on threaded joints.

330.1.1 Requirements. Unless specified otherwise in the engineering design, the minimum preheat temperatures for materials of various P-Numbers are given in Table 330.1.1. The thickness intended in Table 330.1.1 is that of the nominal thickness of the thicker component [as defined in para. 331.1.3(c)]. Higher minimum preheat

Copyright © 2015 by the American Society of Mechanical Engineers.
No reproduction may be made of this material without written consent of ASME.

Fig. 328.5.5 Typical Fabricated Laps

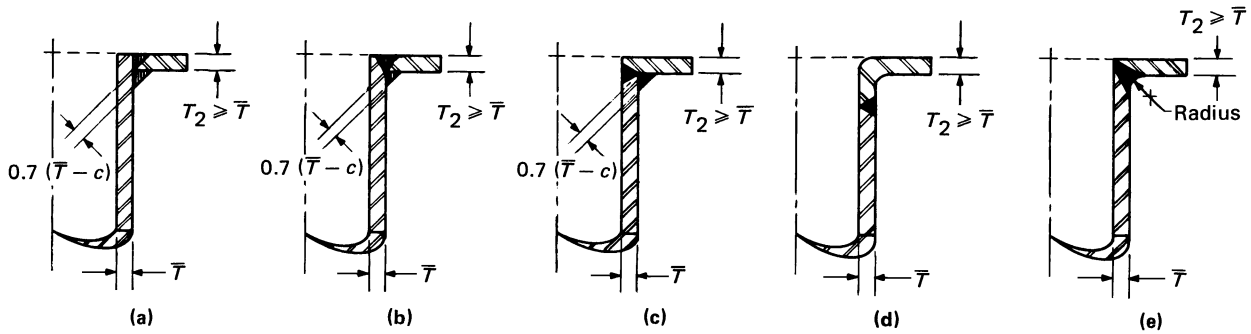

GENERAL NOTE: Laps shall be machined (front and back) or trued after welding. Plate flanges in accordance with para. 304.5 or lap joint flanges in accordance with ASME B16.5 may be used. Welds may be machined to radius, as in sketch (e), if necessary to match ASME B16.5 lap joint flanges.

(14)

Table 330.1.1 Preheat Temperatures

Base Metal P-No. [Note (1)]	Base Metal Group	Greater Material Thickness mm	Greater Material Thickness in.	Additional Limits [Note (2)]	Required Minimum Temperature °C	Required Minimum Temperature °F
1	Carbon steel	≤25	≤1	%C > 0.30 [Note (3)]	10	50
		>25	>1	%C ≤ 0.30 [Note (3)]	10	50
		>25	>1	%C > 0.30 [Note (3)]	95	200
3	Alloy steel, Cr ≤ ½%	≤13	≤½	SMTS ≤ 450 MPa (65 ksi)	10	50
		>13	>½	SMTS ≤ 450 MPa (65 ksi)	95	200
		All	All	SMTS > 450 MPa (65 ksi)	95	200
4	Alloy steel, ½% < Cr ≤ 2%	All	All	None	120	250
5A	Alloy steel	All	All	SMTS ≤ 414 MPa (60 ksi)	150	300
		All	All	SMTS > 414 MPa (60 ksi)	200	400
5B	Alloy steel	All	All	SMTS ≤ 414 MPa (60 ksi)	150	300
		All	All	SMTS > 414 MPa (60 ksi)	200	400
		≤13	≤½	%Cr > 6.0 [Note (3)]	200	400
6	Martensitic stainless steel	All	All	None	200 [Note (4)]	400 [Note (4)]
9A	Nickel alloy steel	All	All	None	120	250
9B	Nickel alloy steel	All	All	None	150	300
10I	27Cr steel	All	All	None	150 [Note (5)]	300 [Note (5)]
15E	9Cr–1Mo–V CSEF steel	All	All	None	200	400
. . .	All other materials	. . .	. . .	None	10	50

NOTES:
(1) P-Nos. and Group Nos. from BPV Code, Section IX, QW/QB-422.
(2) SMTS = Specified Minimum Tensile Strength.
(3) Composition may be based on ladle or product analysis or in accordance with specification limits.
(4) Maximum interpass temperature 315°C (600°F).
(5) Maintain interpass temperature between 150°C and 230°C (300°F and 450°F).

Copyright © 2015 by the American Society of Mechanical Engineers.
No reproduction may be made of this material without written consent of ASME.

temperatures may be required by the WPS or by the engineering design.

330.1.2 Unlisted Materials. Preheat requirements for an unlisted material shall be specified in the WPS.

330.1.3 Preheat Temperature Verification

(a) Preheat temperature shall be checked by use of temperature indicating crayons, thermocouple pyrometers, or other suitable means to ensure that the temperature specified in the WPS is obtained prior to and maintained during welding.

(b) Thermocouples may be temporarily attached directly to pressure-containing parts using the low energy capacitor discharge method of welding in accordance with para. 328.7.

330.1.4 Preheat Zone. The preheat zone shall be at or above the specified minimum temperature in all directions from the point of welding for a distance of the larger of 75 mm (3 in.) or 1.5 times the greater nominal thickness.

The base metal temperature for tack welds shall be at or above the specified minimum temperature for a distance not less than 25 mm (1 in.) in all directions from the point of welding.

330.2 Specific Requirements

330.2.1 Different P-No. Materials. When welding two different P-No. materials, the preheat temperature shall be the higher temperature for the material being welded as shown in Table 330.1.1.

330.2.2 Interruption of Welding. After welding commences, the minimum preheat temperature shall be maintained until any required PWHT is performed on P-Nos. 3, 4, 5A, 5B, 6, and 15E, except when all of the following conditions are satisfied:

(a) A minimum of at least 10 mm (3/8 in.) thickness of weld is deposited or 25% of the welding groove is filled, whichever is less (the weld shall be sufficiently supported to prevent overstressing the weld if the weldment is to be moved or otherwise loaded). Caution is advised that the surface condition prior to cooling should be smooth and free of sharp discontinuities.

(b) For P-Nos. 3, 4, and 5A materials, the weld is allowed to cool slowly to room temperature.

(c) For P-Nos. 5B, 6, and 15E materials, the weld is subjected to an adequate intermediate heat treatment with a controlled rate of cooling. The preheat temperature may be reduced to 95°C (200°F) (minimum) for the purpose of root examination without performing an intermediate heat treatment. Intermediate heat treatment for P-No. 5B or P-No. 15E materials may be omitted when using low-hydrogen electrodes and filler metals classified by the filler metal specification with an optional supplemental diffusible-hydrogen designator of H4 or lower and suitably controlled by maintenance procedures to avoid contamination by hydrogen-producing sources. The surface of the base metal prepared for welding shall be free of contaminants.

(d) After cooling and before welding is resumed, visual examination of the weld shall be performed to assure that no cracks have formed.

(e) Required preheat shall be applied before welding is resumed.

331 HEAT TREATMENT (14)

331.1 General (14)

331.1.1 Postweld Heat Treatment Requirements

(a) PWHT shall be in accordance with the material groupings (P-Nos. and Group Nos.) and ranges in Table 331.1.1 except as provided in Table 331.1.2 and Table 331.1.3. The P-Numbers and Group Numbers are defined in ASME BPV Code, Section IX, Table QW/QB-422. (Note that the P-Nos. are also listed in Appendix A.)

(b) The PWHT to be used after production welding shall be specified in the WPS and shall be used in qualifying the welding procedure.

(c) The engineering design shall specify the examination and/or other production quality control (not less than the requirements of this Code) to ensure that the final welds are of adequate quality.

331.1.2 Other Heat Treatments

(a) Heat treatment for bending and forming shall be in accordance with para. 332.4.

(b) See Table 302.3.5 for special heat treatment requirements for longitudinal or spiral (helical seam) welds in Elevated Temperature Fluid Service.

331.1.3 Definition of Thicknesses Governing PWHT

(a) The term *control thickness* as used in Table 331.1.1 and Table 331.1.3 is the lesser of

(1) the thickness of the weld

(2) the thickness of the materials being joined at the weld or the thickness of the pressure-containing material if the weld is attaching a nonpressure-containing material to a pressure-containing material.

(b) Thickness of the weld, which is a factor in determining the control thickness, is defined as follows:

(1) groove welds (girth and longitudinal) — the thicker of the two abutting ends after weld preparation, including I.D. machining

(2) fillet welds — the throat thickness of the weld

(3) partial penetration welds — the depth of the weld groove

(4) material repair welds — the depth of the cavity to be repaired

(5) branch welds — the dimension existing in the plane intersecting the longitudinal axes, calculated as indicated for each detail using the thickness through the weld for the details shown in Fig. 328.5.4D and

Copyright © 2015 by the American Society of Mechanical Engineers.
No reproduction may be made of this material without written consent of ASME.

(14)

Table 331.1.1 Postweld Heat Treatment

P-No. and Group No. (BPV Code Section IX, QW/QB-420)	Holding Temperature Range, °C (°F) [Note (1)]	Minimum Holding Time at Temperature for Control Thickness [Note (2)]	
		Up to 50 mm (2 in.)	Over 50 mm (2 in.)
P-No. 1, Group Nos. 1–3	595 to 650 (1,100 to 1,200)	1 h/25 mm (1 hr/in.); 15 min min.	2 hr plus 15 min for each additional 25 mm (in.) over 50 mm (2 in.)
P-No. 3, Group Nos. 1 and 2	595 to 650 (1,100 to 1,200)		
P-No. 4, Group Nos. 1 and 2	650 to 705 (1,200 to 1,300)		
P-No. 5A, Group No. 1	675 to 760 (1,250 to 1,400)		
P-No. 5B, Group No. 1	675 to 760 (1,250 to 1,400)		
P-No. 6, Group Nos. 1–3	760 to 800 (1,400 to 1,475)		
P-No. 7, Group Nos. 1 and 2 [Note (3)]	730 to 775 (1,350 to 1,425)		
P-No. 8, Group Nos. 1–4	PWHT not required unless required by WPS		
P-No. 9A, Group No. 1	595 to 650 (1,100 to 1,200)		
P-No. 9B, Group No. 1	595 to 650 (1,100 to 1,200)		
P-No. 10H, Group No. 1	PWHT not required unless required by WPS. If done, see Note (4).		
P-No. 10I, Group No. 1 [Note (3)]	730 to 815 (1,350 to 1,500)		
P-No. 11A	550 to 585 (1,025 to 1,085) [Note (5)]		
P-No. 15E, Group No. 1	730 to 775 (1,350 to 1,425) [Notes (6) and (7)]	1 h/25 mm (1 hr/in.); 30 min min.	1 h/25 mm (1 hr/in.) up to 125 mm (5 in.) plus 15 min for each additional 25 mm (in.) over 125 mm (5 in.)
P-No. 62	540 to 595 (1,000 to 1,100)	. . .	See Note (8)
All other materials	PWHT as required by WPS	In accordance with WPS	In accordance with WPS

GENERAL NOTE: The exemptions for mandatory PWHT are defined in Table 331.1.3.

NOTES:

(1) The holding temperature range is further defined in para. 331.1.6(c) and Table 331.1.2.

(2) The control thickness is defined in para. 331.1.3.

(3) Cooling rate shall not be greater than 55°C (100°F) per hour in the range above 650°C (1,200°F), after which the cooling rate shall be sufficiently rapid to prevent embrittlement.

(4) If PWHT is performed after welding, it shall be within the following temperature ranges for the specific alloy, followed by rapid cooling:
Alloys S31803 and S32205 — 1 020°C to 1 100°C (1,870°F to 2,010°F)
Alloy S32550 — 1 040°C to 1 120°C (1,900°F to 2,050°F)
Alloy S32750 — 1 025°C to 1 125°C (1,880°F to 2,060°F)
All others — 980°C to 1 040°C (1,800°F to 1,900°F).

(5) Cooling rate shall be >165°C (300°F)/h to 315°C (600°F)/h.

(6) The minimum PWHT holding temperature may be 720°C (1,325°F) for nominal material thicknesses [see para. 331.1.3(c)] ≤½ in. (13 mm).

(7) The Ni + Mn content of the filler metal shall not exceed 1.2% unless specified by the designer, in which case the maximum temperature to be reached during PWHT shall be the A_1 (lower transformation or lower critical temperature) of the filler metal, as determined by analysis and calculation or by test, but not exceeding 800°C (1,470°F). If the 800°C (1,470°F) limit was not exceeded but the A_1 of the filler metal was exceeded or if the composition of the filler metal is unknown, the weld must be removed and replaced. It shall then be rewelded with compliant filler metal and subjected to a compliant PWHT. If the 800°C (1,470°F) limit was exceeded, the weld and the entire area affected by the PWHT will be removed and, if reused, shall be renormalized and tempered prior to reinstallation.

(8) Heat treat within 14 days after welding. Hold time shall be increased by 1.2 h for each 25 mm (1 in.) over 25 mm (1 in.) thickness. Cool to 425°C (800°F) at a rate ≤280°C (500°F).

Copyright © 2015 by the American Society of Mechanical Engineers.
No reproduction may be made of this material without written consent of ASME.

(14) **Table 331.1.2 Alternate Postweld Heat Treatment Requirements for Carbon and Low Alloy Steels, P-Nos. 1 and 3**

Decrease in Specified Minimum Temperature, °C (°F)	Minimum Holding Time at Decreased Temperature, h [Note (1)]
30 (50)	2
55 (100)	4
85 (150) [Note (2)]	10
110 (200) [Note (2)]	20

NOTES:
(1) Times shown apply to thicknesses ≤25 mm (1 in.). Add 15 min/25 mm (15 min/in.) of thickness for control thicknesses >25 mm (1 in.) (see para. 331.1.3).
(2) A decrease >55°C (100°F) below the minimum specified temperature is allowable only for P-No. 1, Group Nos. 1 and 2 materials.

Fig. 328.5.4F. This thickness shall be computed using the following formulas:

(-a) for Fig. 328.5.4D use

$$\text{illustration (1)} = \overline{T}_b + t_c$$

$$\text{illustration (2)} = \overline{T}_h + t_c$$

$$\text{illustration (3)} = \text{greater of } \overline{T}_b + t_c \text{ or } \overline{T}_r + t_c$$

$$\text{illustration (4)} = \overline{T}_h + \overline{T}_r + t_c$$

$$\text{illustration (5)} = \overline{T}_b + t_c$$

(-b) for Fig. 328.5.4F use $\overline{T}_m + t_c$ for all illustrations

(c) The term *nominal material thickness* as used in Table 331.1.3 is the thicker of the materials being joined at the weld.

331.1.4 Heating and Cooling. The heating method shall provide the required metal temperature, metal temperature uniformity, and temperature control, and may include an enclosed furnace, local flame heating, electric resistance, electric induction, or exothermic chemical reaction. Above 315°C (600°F), the rate of heating and cooling shall not exceed 335°C/h (600°F/hr) divided by one-half the maximum material thickness in inches at the weld, but in no case shall the rate exceed 335°C/h (600°F/hr). See Table 331.1.1 for cooling rate requirements for P-Nos. 7, 10I, 11A, and 62 materials.

331.1.6 Temperature Verification. Heat treatment temperature shall be checked by thermocouple pyrometers or other suitable methods to ensure that the WPS requirements are met. See para. 328.7 for attachment of thermocouples by the low energy capacitor discharge method of welding.

(a) If used, the heat treatment furnace shall be calibrated such that the PWHT can be controlled within the required temperature range.

(b) Any required PWHT shall be as required by the qualified WPS.

(c) For welds that require PWHT in accordance with Table 331.1.1, the temperature of the material during PWHT shall be within the range specified. However, if specified by the designer, the range may be extended as permitted by Table 331.1.2, provided the lower critical temperature of the material is not exceeded.

331.2 Specific Requirements

Where warranted by experience or knowledge of service conditions, alternative methods of heat treatment or exceptions to the basic heat treatment provisions of para. 331.1 may be adopted as provided in paras. 331.2.1 and 331.2.2.

331.2.1 Alternative Heat Treatment. Normalizing, or normalizing and tempering, or annealing may be applied in lieu of the required heat treatment after welding, bending, or forming, provided that the mechanical properties of any affected weld and base metal meet specification requirements after such treatment and that the substitution is approved by the designer.

331.2.2 Exceptions to Basic Requirements. As indicated in para. 331, the basic practices therein may require modification to suit service conditions in some cases. In such cases, the designer may specify more stringent requirements in the engineering design, including heat treatment and hardness limitations for lesser thickness, or may specify less stringent heat treatment and hardness requirements, including none.

When provisions less stringent than those in para. 331 are specified, the designer must demonstrate to the owner's satisfaction the adequacy of those provisions by comparable service experience, considering service temperature and its effects, frequency and intensity of thermal cycling, flexibility stress levels, probability of brittle failure, and other pertinent factors. In addition, appropriate tests shall be conducted, including WPS qualification tests.

331.2.3 Dissimilar Materials

(a) Heat treatment of welded joints between dissimilar ferritic metals or between ferritic metals using dissimilar ferritic filler metal shall be at the higher of the temperature ranges in Table 331.1.1 for the materials in the joint. This may require the use of material transition joint designs.

(b) Heat treatment of welded joints including both ferritic and austenitic components and filler metals shall be as required for the ferritic material or materials unless otherwise specified in the engineering design.

331.2.4 Delayed Heat Treatment. If a weldment is allowed to cool prior to heat treatment, the rate of cooling shall be controlled or other means shall be used to prevent detrimental effects in the piping.

Copyright © 2015 by the American Society of Mechanical Engineers.
No reproduction may be made of this material without written consent of ASME.

(14) **Table 331.1.3 Exemptions to Mandatory Postweld Heat Treatment**

P-No. and Group No. (BPV Code Section IX, QW/QB-420) [Note (1)]	Control Thickness, in. (mm) [Note (2)]	Type of Weld	Additional Limitations Required for Exemption From PWHT [Notes (3)–(5)]
P-No. 1, all Group Nos.	All	All	A preheat of 95°C (200°F) is applied prior to welding on any nominal material thickness >25 mm (1 in.) Multiple layer welds are used when the nominal material thickness >5 mm ($^3/_{16}$ in.) [Note (6)]
P-No. 3, Group Nos. 1 and 2	≤16 mm ($^5/_8$ in.)	All	A preheat of 95°C (200°F) is applied prior to welding on any nominal material thickness >16 mm ($^5/_8$ in.) A specified carbon content of the base materials ≤0.25% Multiple layer welds are used when the nominal material thickness >5 mm ($^3/_{16}$ in.) [Note (6)]
P-No. 4, Group No. 1	≤16 mm ($^5/_8$ in.)	Groove	Mandatory preheat has been applied Specified carbon content of the base materials ≤0.15% Multiple layer welds are used when the nominal material thickness >5 mm ($^3/_{16}$ in.) [Note (6)]
	≤16 mm ($^5/_8$ in.) except the thickness of a socket weld fitting or flange need not be considered	Socket and fillet welds	Mandatory preheat has been applied Throat thickness of the fillet weld or the socket weld ≤13 mm ($^1/_2$ in.) Specified carbon content of the pipe material ≤0.15% Nominal material thickness of the pipe ≤16 mm ($^5/_8$ in.) Multiple layer welds are used when the nominal material thickness >5 mm ($^3/_{16}$ in.) [Note (6)]
	≤16 mm ($^5/_8$ in.)	Seal welds and non-load-carrying attachments [Note (7)]	Mandatory preheat has been applied Multiple layer welds are used when the nominal material thickness >5 mm ($^3/_{16}$ in.) [Note (6)]
P-No. 5A, Group No. 1	≤16 mm ($^5/_8$ in.)	Groove	Mandatory preheat has been applied Specified carbon content of the base materials ≤0.15% Multiple layer welds are used when the nominal material thickness >5 mm ($^3/_{16}$ in.) [Note (6)]
	≤16 mm ($^5/_8$ in.) except the thickness of a socket weld fitting or flange need not be considered	Socket and fillet welds	Mandatory preheat has been applied Throat thickness of the fillet weld or the socket weld ≤13 mm ($^1/_2$ in.) Specified carbon content of the pipe material ≤0.15% Nominal thickness of the pipe ≤5 mm ($^3/_{16}$ in.) Multiple layer welds are used when the nominal material thickness >5 mm ($^3/_{16}$ in.) [Note (6)]
	≤16 mm ($^5/_8$ in.)	Seal welds and non-load-carrying attachments [Note (7)]	Mandatory preheat has been applied Multiple layer welds are used when the nominal material thickness >5 mm ($^3/_{16}$ in.) [Note (6)]
P-No. 5B, Group No. 1	. . .	. . .	No exemptions from PWHT

Copyright © 2015 by the American Society of Mechanical Engineers.
No reproduction may be made of this material without written consent of ASME.

Table 331.1.3 Exemptions to Mandatory Postweld Heat Treatment (Cont'd) (14)

P-No. and Group No. (BPV Code Section IX, QW/QB-420) [Note (1)]	Control Thickness, in. (mm) [Note (2)]	Type of Weld	Additional Limitations Required for Exemption From PWHT [Notes (3)–(5)]
P-No. 6, Group Nos. 1–3	All	All	Specified carbon content of the base materials ≤0.08% Nominal material thickness ≤10 mm (3/8 in.) Weld filler metal is A-No. 8, A-No. 9, or F-No. 43 composition [Note (8)]
P-No. 7, Group No. 1	All	All	Specified carbon content of the base materials ≤0.08% Nominal material thickness ≤10 mm (3/8 in.) Weld filler metal is A-No. 8, A-No. 9, or F-No. 43 composition [Note (8)]
P-No. 7, Group No. 2	. . .	. . .	No exemptions from PWHT
P-No. 8, all Group Nos.	All	All	PWHT neither required nor prohibited
P-No. 9A, Group No. 1	All	All	Specified carbon content of the pipe material ≤0.15% Nominal material thickness ≤13 mm (1/2 in.) Mandatory preheat has been applied
P-No. 9B, Group No. 1	All	All	Nominal material thickness ≤16 mm (5/8 in.) and the WPS has been qualified using a material of equal or greater thickness than used in the production weld
P-No. 10H, Group No. 1	All	All	PWHT neither required nor prohibited
P-No. 10I, Group No. 1	All	All	PWHT neither required nor prohibited for nominal material thickness ≤13 mm (1/2 in.)
P-No. 11A	≤50 mm (2 in.)	All	. . .
P-No. 15E	. . .	. . .	No exemptions from PWHT
P-No. 62	. . .	. . .	No exemptions from PWHT

NOTES:
(1) If differences with the P-No. listed in Appendix A are found, the P-No. listed in ASME BPV Code Section IX, Table QW/QB-422 applies.
(2) The control thickness is defined in para. 331.1.3.
(3) The nominal material thickness is defined in para. 331.1.3(c).
(4) No exemptions are permitted for PWHTs required by the designer or the WPS.
(5) Additional exemptions for welds made in accordance with para. 328.7 may be taken for the materials addressed.
(6) Single-layer or single-pass welds may be exempted from PWHT, provided the WPS has been qualified using single-pass welds with ±10% heat input and that all other conditions for exemption are met.
(7) Non-load-carrying attachments are defined as items where no pressure loads or significant mechanical loads are transmitted through the attachment to the pipe or pressure-containing material.
(8) The A-Nos. and the F-Nos. are found in ASME BPV Code Section IX, Tables QW-442 and QW-432, respectively.

Copyright © 2015 by the American Society of Mechanical Engineers.
No reproduction may be made of this material without written consent of ASME.

331.2.5 Partial Heat Treatment. When an entire piping assembly to be heat treated cannot be fitted into the furnace, it is permissible to heat treat in more than one heat, provided there is at least 300 mm (1 ft) overlap between successive heats, and that parts of the assembly outside the furnace are protected from harmful temperature gradients.

331.2.6 Local Heat Treatment. Welds may be locally postweld heat treated by heating a circumferential band around the entire component with the weld located in the center of the band. The width of the band heated to the specified temperature range shall be at least three times the wall thickness at the weld of the thickest part being joined. For nozzle and attachment welds, the width of the band heated to the specified temperature range shall extend beyond the nozzle weld or attachment weld on each side at least two times the run pipe thickness, and shall extend completely around the run pipe. Guidance for the placement of thermocouples on circumferential butt welds is provided in AWS D10.10, Sections 5, 6, and 8. Special consideration shall be given to the placement of thermocouples when heating welds adjacent to large heat sinks such as valves or fittings, or when joining parts of different thicknesses. No part of the materials subjected to the heat source shall exceed the lower critical temperature of the material except as permitted by para. 331.2.1. Particular care must be exercised when the applicable PWHT temperature is close to the material's lower critical temperature, such as for P-No. 15E materials or when materials of different P-Nos. are being joined. This method may not be used for austenitizing heat treatments.

332 BENDING AND FORMING

(14) 332.1 General

Pipe may be bent and components may be formed by any hot or cold method that is suitable for the material, the fluid service, and the severity of the bending or forming process.[1] The finished surface shall be free of cracks and substantially free from buckling. Thickness after bending or forming shall be not less than that required by the design.

332.2 Bending

332.2.1 Bend Flattening. Flattening of a bend, the difference between maximum and minimum diameters at any cross section, shall not exceed 8% of nominal outside diameter for internal pressure and 3% for external pressure. Removal of metal shall not be used to achieve these requirements.

[1] For pipe bending, PFI Standard ES-24, Pipe Bending Method, Tolerances, Process and Material Requirements, may be used as a guide.

332.2.2 Bending Temperature

(a) Cold bending of ferritic materials shall be done at a temperature below the transformation range.

(b) Hot bending shall be done at a temperature above the transformation range and in any case within a temperature range consistent with the material and the intended service.

332.2.3 Corrugated and Other Bends. Dimensions and configuration shall conform to the design qualified in accordance with para. 306.2.2.

332.3 Forming

The temperature range for forming shall be consistent with material, intended service, and specified heat treatment.

332.4 Required Heat Treatment

Heat treatment shall be performed in accordance with para. 331.1.1 when required by the following.

332.4.1 Hot Bending and Forming. After hot bending and forming, heat treatment is required for P-Nos. 3, 4, 5, 6, and 10A materials in all thicknesses. Durations and temperatures shall be in accordance with para. 331.

332.4.2 Cold Bending and Forming. After cold bending and forming, heat treatment is required (for all thicknesses, and with temperature and duration as given in Table 331.1.1) when any of the following conditions exist:

(a) for P-Nos. 1 through 6 materials, where the maximum calculated fiber elongation after bending or forming exceeds 50% of specified basic minimum elongation (in the direction of severest forming) for the applicable specification, grade, and thickness. This requirement may be waived if it can be demonstrated that the selection of pipe and the choice of bending or forming process provide assurance that, in the finished condition, the most severely strained material retains at least 10% elongation.

(b) for any material requiring impact testing, where the maximum calculated fiber elongation after bending or forming will exceed 5%.

(c) when specified in the engineering design.

333 BRAZING AND SOLDERING

333.1 Qualification

333.1.1 Brazing Qualification. The qualification of brazing procedures, brazers, and brazing operators shall be in accordance with para. 328.2. For Category D Fluid Service at design temperature not over 93°C (200°F), such qualification is not required unless specified in the engineering design.

333.1.2 Soldering Qualification. The qualification of solderers shall be in accordance with the requirements of ASTM B828, Standard Practice for Making Capillary

Copyright © 2015 by the American Society of Mechanical Engineers.
No reproduction may be made of this material without written consent of ASME.

Joints by Soldering of Copper and Copper Alloy Tube and Fittings.

333.2 Brazing and Soldering Materials

333.2.1 Brazing Filler Metal and Flux. Brazing filler metal and flux shall comply with AWS A5.8, Specification for Filler Metals for Brazing and Braze Welding, and AWS A5.31, Specification for Fluxes for Brazing and Braze Welding, respectively, or other filler metals and fluxes that have been qualified in accordance with ASME Section IX.

333.2.2 Soldering Filler Metal and Flux. Soldering filler metal and flux shall comply with ASTM B32, Standard Specification for Solder Metal, and ASTM B813, Standard Specification for Liquid and Paste Fluxes for Soldering of Copper and Copper Alloy Tube, respectively.

333.3 Preparation and Cleaning

333.3.1 Surface Preparation. The surfaces to be brazed or soldered shall be clean and free from grease, oxides, paint, scale, and dirt of any kind. A suitable chemical or mechanical cleaning method shall be used if necessary to provide a clean wettable surface.

333.3.2 Joint Clearance. The clearance between surfaces to be joined by soldering or brazing shall be no larger than necessary to allow complete capillary distribution of the filler metal.

333.3.3 Flux Removal. Residual flux shall be removed.

335 ASSEMBLY AND ERECTION

335.1 Alignment

(a) Piping Distortions. Any distortion of piping to bring it into alignment for joint assembly that introduces a detrimental strain in equipment or piping components is prohibited.

(b) Cold Spring. Before assembling any joints to be cold sprung, guides, supports, and anchors shall be examined for errors that might interfere with desired movement or lead to undesired movement. The gap or overlap of piping prior to assembly shall be checked against the drawing and corrected if necessary. Heating shall not be used to help in closing the gap because it defeats the purpose of cold springing.

(c) Flanged Joints. Unless otherwise specified in the engineering design, flanged joints shall be aligned as described in subparas. (1) or (2), and (3).

(1) Before bolting, mating gasket contact surfaces shall be aligned to each other within 1 mm in 200 mm ($\frac{1}{16}$ in./ft), measured across any diameter.

(2) The flanged joint shall be capable of being bolted such that the gasket contact surfaces bear uniformly on the gasket.

(3) Flange bolt holes shall be aligned within 3 mm ($\frac{1}{8}$ in.) maximum offset.

335.2 Flanged Joints

335.2.1 Preparation for Assembly. Any damage to the gasket seating surface that would prevent gasket seating shall be repaired, or the flange shall be replaced.

335.2.2 Bolting Torque

(a) In assembling flanged joints, the gasket shall be uniformly compressed to the proper design loading.

(b) Special care shall be used in assembling flanged joints in which the flanges have widely differing mechanical properties. Tightening to a predetermined torque is recommended.

335.2.3 Bolt Length. Bolts should extend completely through their nuts. Any that fail to do so are considered acceptably engaged if the lack of complete engagement is not more than one thread.

335.2.4 Gaskets. No more than one gasket shall be used between contact faces in assembling a flanged joint.

335.3 Threaded Joints

335.3.1 Thread Compound or Lubricant. Any compound or lubricant used on threads shall be suitable for the service conditions and shall not react unfavorably with either the service fluid or the piping material.

335.3.2 Joints for Seal Welding. A threaded joint to be seal welded shall be made up without thread compound. A joint containing thread compound that leaks during leak testing may be seal welded in accordance with para. 328.5.3, provided all compound is removed from exposed threads.

335.3.3 Straight Threaded Joints. Typical joints using straight threads, with sealing at a surface other than the threads, are shown in Fig. 335.3.3, illustrations (a), (b), and (c). Care shall be taken to avoid distorting the seat when incorporating such joints into piping assemblies by welding, brazing, or bonding.

335.4 Tubing Joints

335.4.1 Flared Tubing Joints. The sealing surface of the flare shall be examined for imperfections before assembly and any flare having imperfections shall be rejected.

335.4.2 Flareless and Compression Tubing Joints. Where the manufacturer's instructions call for a specified number of turns of the nut, these shall be counted from the point at which the nut becomes finger tight.

335.5 Caulked Joints

Caulked joints shall be installed and assembled in accordance with the manufacturer's instructions, as

Copyright © 2015 by the American Society of Mechanical Engineers.
No reproduction may be made of this material without written consent of ASME.

modified by the engineering design. Care shall be taken to ensure adequate engagement of joint members.

335.6 Expanded Joints and Special Joints

335.6.1 General. Expanded joints and special joints (as defined in para. 318) shall be installed and assembled in accordance with the manufacturer's instructions, as modified by the engineering design. Care shall be taken to ensure adequate engagement of joint members.

335.6.2 Packed Joints. Where a packed joint is used to absorb thermal expansion, proper clearance shall be provided at the bottom of the socket to permit this movement.

335.9 Cleaning of Piping (14)

This Code does not prescribe mandatory procedures for flushing and cleaning. However, for potential hazards that may result from performing such procedures refer to Appendix F, para. F335.9 for precautionary considerations.

335.10 Identification of Piping

See Appendix F, para. F335.10.

Fig. 335.3.3 Typical Threaded Joints Using Straight Threads

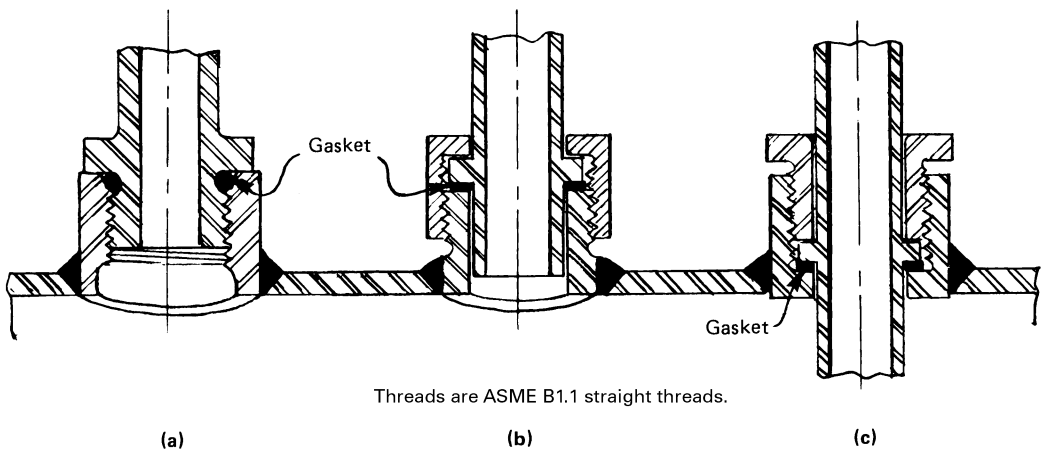

Copyright © 2015 by the American Society of Mechanical Engineers.
No reproduction may be made of this material without written consent of ASME.

Chapter VI
Inspection, Examination, and Testing

340 INSPECTION

340.1 General

This Code distinguishes between examination (see para. 341) and inspection. Inspection applies to functions performed for the owner by the owner's Inspector or the Inspector's delegates. References in this Code to the "Inspector" are to the owner's Inspector or the Inspector's delegates.

340.2 Responsibility for Inspection

It is the owner's responsibility, exercised through the owner's Inspector, to verify that all required examinations and testing have been completed and to inspect the piping to the extent necessary to be satisfied that it conforms to all applicable examination requirements of the Code and of the engineering design.

340.3 Rights of the Owner's Inspector

The owner's Inspector and the Inspector's delegates shall have access to any place where work concerned with the piping installation is being performed. This includes manufacture, fabrication, heat treatment, assembly, erection, examination, and testing of the piping. They shall have the right to audit any examination, to inspect the piping using any examination method specified by the engineering design, and to review all certifications and records necessary to satisfy the owner's responsibility stated in para. 340.2.

340.4 Qualifications of the Owner's Inspector

(a) The owner's Inspector shall be designated by the owner and shall be the owner, an employee of the owner, an employee of an engineering or scientific organization, or of a recognized insurance or inspection company acting as the owner's agent. The owner's Inspector shall not represent nor be an employee of the piping manufacturer, fabricator, or erector unless the owner is also the manufacturer, fabricator, or erector.

(b) The owner's Inspector shall meet one of the following requirements:

(1) have at least 10 years of experience in the design, fabrication, or examination of industrial pressure piping. Each 20% of satisfactorily completed work toward an accredited engineering degree shall be considered equivalent to 1 year of experience, up to 5 years total.

(2) have a professional engineering registration or nationally recognized equivalent with at least 5 years of experience in the design, fabrication, or examination of industrial pressure piping.

(3) be a certified welding inspector or a senior certified welding inspector as defined in AWS QC1, Standard for AWS Certification of Welding Inspectors, or nationally recognized equivalent with at least 5 years of experience in the design, fabrication, or examination of industrial pressure piping.

(4) be an authorized piping inspector as defined in API 570, Piping Inspection Code: In-service Inspection, Rating, Repair, and Alteration of Piping Systems, with at least 5 years of experience in the design, fabrication, or examination of industrial pressure piping.

(c) In delegating performance of inspection, the owner's Inspector is responsible for determining that a person to whom an inspection function is delegated is qualified to perform that function.

341 EXAMINATION

341.1 General

Examination applies to quality control functions performed by the manufacturer (for components only), fabricator, or erector. Reference in this Code to an examiner is to a person who performs quality control examinations.

341.2 Responsibility for Examination

Inspection does not relieve the manufacturer, the fabricator, or the erector of the responsibility for

(a) providing materials, components, and workmanship in accordance with the requirements of this Code and of the engineering design [see para. 300(b)(3)]

(b) performing all required examinations

(c) preparing suitable records of examinations and tests for the Inspector's use

341.3 Examination Requirements

341.3.1 General. Prior to initial operation each piping installation, including components and workmanship, shall be examined in accordance with the applicable requirements of para. 341. The type and extent of any additional examination required by the engineering design, and the acceptance criteria to be applied, shall be specified. Joints not included in examinations required by para. 341.4 or by the engineering design are accepted if they pass the leak test required by para. 345. (14)

Copyright © 2015 by the American Society of Mechanical Engineers.
No reproduction may be made of this material without written consent of ASME.

(a) For P-Nos. 3, 4, 5A, 5B, 5C, and 15E materials, examinations shall be performed after completion of heat treatment. However, examinations need not be repeated on welds or portions of welds that are subjected to additional heat treatments and have not been repaired by welding.

(b) For a welded branch connection the examination of and any necessary repairs to the pressure-containing weld shall be completed before any reinforcing pad or saddle is added.

(14) **341.3.2 Acceptance Criteria.** Acceptance criteria shall be as stated in the engineering design and shall at least meet the applicable requirements stated below.

(a) Welds

(1) For radiography and visual, see Table 341.3.2.

(2) For magnetic particle, see para. 344.3.2.

(3) For liquid penetrant, see para. 344.4.2.

(4) For ultrasonic, see para. 344.6.2.

(b) Castings. Acceptance criteria for castings are specified in para. 302.3.3.

(14) **341.3.3 Defective Components and Workmanship.** Defects (imperfections of a type or magnitude not acceptable by the criteria specified in para. 341.3.2) shall be repaired, or the defective item or work shall be replaced.

Examination shall be as follows:

(a) When the defective item or work is repaired, the repaired portion of the item or work shall be examined. The examination shall use the same methods and acceptance criteria employed for the original examination. See also para. 341.3.1(a).

(b) When the defective item or work is replaced, the new item or work used to replace the defective item or work shall be examined. The examination shall use any method and applicable acceptance criteria that meet the requirements for the original examination. See also para. 341.3.1(a).

341.3.4 Progressive Sampling for Examination. When required spot or random examination reveals a defect, then

(a) two additional samples of the same kind (if welded or bonded joints, by the same welder, bonder, or operator) from the original designated lot shall be given the same type of examination

(b) if the items examined as required by (a) above are acceptable, the defective item shall be repaired or replaced and reexamined as specified in para. 341.3.3, and all items represented by these two additional samples shall be accepted, but

(c) if any of the items examined as required by (a) above reveals a defect, two further samples of the same kind shall be examined for each defective item found by that sampling

(d) if all the items examined as required by (c) above are acceptable, the defective item(s) shall be repaired or replaced and reexamined as specified in para. 341.3.3, and all items represented by the additional sampling shall be accepted, but

(e) if any of the items examined as required by (c) above reveals a defect, all items represented by the progressive sampling shall be either

(1) repaired or replaced and reexamined as required, or

(2) fully examined and repaired or replaced as necessary, and reexamined as necessary to meet the requirements of this Code

(f) If any of the defective items are repaired or replaced, reexamined, and a defect is again detected in the repaired or replaced item, continued progressive sampling in accordance with (a), (c), and (e) is not required based on the defects found in the repair. The defective item(s) shall be repaired or replaced and reexamined until acceptance as specified in para. 341.3.3. Spot or random examination (whichever is applicable) is then performed on the remaining unexamined joints.

341.4 Extent of Required Examination

341.4.1 Examination — Normal Fluid Service. Piping in Normal Fluid Service shall be examined to the extent specified herein or to any greater extent specified in the engineering design. Acceptance criteria are as stated in para. 341.3.2 and in Table 341.3.2, for Normal Fluid Service unless otherwise specified.

(a) Visual Examination. At least the following shall be examined in accordance with para. 344.2:

(1) sufficient materials and components, selected at random, to satisfy the examiner that they conform to specifications and are free from defects.

(2) at least 5% of fabrication. For welds, each welder's and welding operator's work shall be represented.

(3) 100% of fabrication for longitudinal welds, except those in components made in accordance with a listed specification. See para 341.5.1(a) for examination of longitudinal welds required to have a joint factor, E_j, of 0.90.

(4) random examination of the assembly of threaded, bolted, and other joints to satisfy the examiner that they conform to the applicable requirements of para. 335. When pneumatic testing is to be performed, all threaded, bolted, and other mechanical joints shall be examined.

(5) random examination during erection of piping, including checking of alignment, supports, and cold spring.

(6) examination of erected piping for evidence of defects that would require repair or replacement, and for other evident deviations from the intent of the design.

Copyright © 2015 by the American Society of Mechanical Engineers.
No reproduction may be made of this material without written consent of ASME.

(14)

Table 341.3.2 Acceptance Criteria for Welds — Visual and Radiographic Examination

Criteria (A to M) for Types of Welds and for Service Conditions [Note (1)]											Examination Methods	
Normal and Category M Fluid Service			Severe Cyclic Conditions			Category D Fluid Service						
Type of Weld			Type of Weld			Type of Weld						
Girth, Miter Groove & Branch Connection [Note (2)]	Longitudinal Groove [Note (3)]	Fillet [Note (4)]	Girth, Miter Groove & Branch Connection [Note (2)]	Longitudinal Groove [Note (3)]	Fillet [Note (4)]	Girth and Miter Groove	Longitudinal Groove [Note (3)]	Fillet [Note (4)]	Branch Connection [Note (2)]	Weld Imperfection	Visual	Radiography
A	A	A	A	A	A	A	A	A	A	Crack	✓	✓
A	A	A	A	A	A	C	A	N/A	A	Lack of fusion	✓	✓
B	A	N/A	A	A	N/A	C	A	N/A	B	Incomplete penetration	✓	✓
E	E	N/A	D	D	N/A	N/A	N/A	N/A	N/A	Rounded Indications	. . .	✓
G	G	N/A	F	F	N/A	N/A	N/A	N/A	N/A	Internal slag inclusion, tungsten inclusion, or elongated indication	. . .	✓
H	A	H	A	A	A	I	A	H	H	Undercutting	✓	✓
A	A	A	A	A	A	A	A	A	A	Surface porosity or exposed slag inclusion [Note (5)]	✓	. . .
N/A	N/A	N/A	J	J	J	N/A	N/A	N/A	N/A	Surface finish	✓	. . .
K	K	N/A	K	K	N/A	K	K	N/A	K	Concave surface	✓	✓
L	L	L	L	L	L	M	M	M	M	Weld reinforcement or internal protrusion	✓	. . .

GENERAL NOTES:

(a) Weld imperfections are evaluated by one or more of the types of examination methods given, as specified in paras. 341.4.1, 341.4.2, 341.4.3, and M341.4, or by the engineering design.

(b) "N/A" indicates the Code does not establish acceptance criteria or does not require evaluation of this kind of imperfection for this type of weld.

(c) Check (✓) indicates examination method generally used for evaluating this kind of weld imperfection.

(d) Ellipsis (. . .) indicates examination method not generally used for evaluating this kind of weld imperfection.

Copyright © 2015 by the American Society of Mechanical Engineers.
No reproduction may be made of this material without written consent of ASME.

(14)

Criterion Value Notes for Table 341.3.2

Criterion		
Symbol	Measure	Acceptable Value Limits [Note (6)]
A	Extent of imperfection	Zero (no evident imperfection)
B	Cumulative length of incomplete penetration	≤ 38 mm (1.5 in.) in any 150 mm (6 in.) weld length or 25% of total weld length, whichever is less
C	Cumulative length of lack of fusion and incomplete penetration	≤ 38 mm (1.5 in.) in any 150 mm (6 in.) weld length or 25% of total weld length, whichever is less
D	Size and distribution of rounded indications	See BPV Code, Section VIII, Division 1, Appendix 4
E	Size and distribution of rounded indications	For $\overline{T}_w \leq 6$ mm (1/4 in.), limit is same as D For $\overline{T}_w > 6$ mm (1/4 in.), limit is 1.5 × D
F	Slag inclusion, tungsten inclusion, or elongated indication Individual length Individual width Cumulative length	 $\leq \overline{T}_w/3$ ≤ 2.5 mm (3/32 in.) and $\leq \overline{T}_w/3$ $\leq \overline{T}_w$ in any $12\overline{T}_w$ weld length
G	Slag inclusion, tungsten inclusion, or elongated indication Individual length Individual width Cumulative length	 $\leq 2\overline{T}_w$ ≤ 3 mm (1/8 in.) and $\leq \overline{T}_w/2$ $\leq 4\overline{T}_w$ in any 150 mm (6 in.) weld length
H	Depth of undercut	≤ 1 mm (1/32 in.) and $\leq \overline{T}_w/4$
I	Depth of undercut	≤ 1.5 mm (1/16 in.) and ≤ [$\overline{T}_w/4$ or 1 mm (1/32 in.)]
J	Surface roughness	≤ 500 min. R_a in accordance with ASME B46.1
K	Depth of surface concavity	Total joint thickness, incl. weld reinf., $\geq \overline{T}_w$ [Note (7)]
L	Height of reinforcement or internal protrusion [Note (8)] in any plane through the weld shall be within limits of the applicable height value in the tabulation at right, except as provided in Note (9). Weld metal shall merge smoothly into the component surfaces.	For $\overline{T}_w$, mm (in.) / Height, mm (in.) ≤ 6 (1/4) / ≤ 1.5 (1/16) > 6 (1/4), ≤ 13 (1/2) / ≤ 3 (1/8) > 13 (1/2), ≤ 25 (1) / ≤ 4 (5/32) > 25 (1) / ≤ 5 (3/16)
M	Height of reinforcement or internal protrusion [Note (8)] as described in L. Note (9) does not apply.	Limit is twice the value applicable for L above

Notes follow on next page

Copyright © 2015 by the American Society of Mechanical Engineers.
No reproduction may be made of this material without written consent of ASME.

(14) **Table 341.3.2 Acceptance Criteria for Welds — Visual and Radiographic Examination (Cont'd)**

NOTES:

(1) Criteria given are for required examination. More stringent criteria may be specified in the engineering design. See also paras. 341.5 and 341.5.3.

(2) Branch connection weld includes pressure containing welds in branches and fabricated laps.

(3) Longitudinal groove weld includes straight and spiral (helical) seam. Criteria are not intended to apply to welds made in accordance with a standard listed in Table A-1 or Table 326.1. Alternative Leak Test requires examination of these welds; see para. 345.9.

(4) Fillet weld includes socket and seal welds, and attachment welds for slip-on flanges, branch reinforcement, and supports.

(5) These imperfections are evaluated only for welds ≤ 5 mm ($^3/_{16}$ in.) in nominal thickness.

(6) Where two limiting values are separated by "and," the lesser of the values determines acceptance. Where two sets of values are separated by "or," the larger value is acceptable. $\overline{T}_w$ is the nominal wall thickness of the thinner of two components joined by a butt weld.

(7) For circumferential groove welded joints in pipe, tube, and headers made entirely without the addition of filler metal, external concavity shall not exceed the lesser of 1 mm ($^1/_{32}$ in.) or 10% of the joint nominal thickness. The contour of the concavity shall blend smoothly with the base metal. The total joint thickness, including any reinforcement, shall not be less than the minimum wall thickness, t_m.

(8) For groove welds, height is the lesser of the measurements made from the surfaces of the adjacent components; both reinforcement and internal protrusion are permitted in a weld. For fillet welds, height is measured from the theoretical throat, Fig. 328.5.2A; internal protrusion does not apply.

(9) For welds in aluminum alloy only, internal protrusion shall not exceed the following values:
(a) 1.5 mm ($^1/_{16}$ in.) for thickness ≤ 2 mm ($^5/_{64}$ in.)
(b) 2.5 mm ($^3/_{32}$ in.) for thickness > 2 mm and ≤ 6 mm ($^1/_4$ in.)
For external reinforcement and for greater thicknesses, see the tabulation for symbol L.

Copyright © 2015 by the American Society of Mechanical Engineers.
No reproduction may be made of this material without written consent of ASME.

Fig. 341.3.2 Typical Weld Imperfections

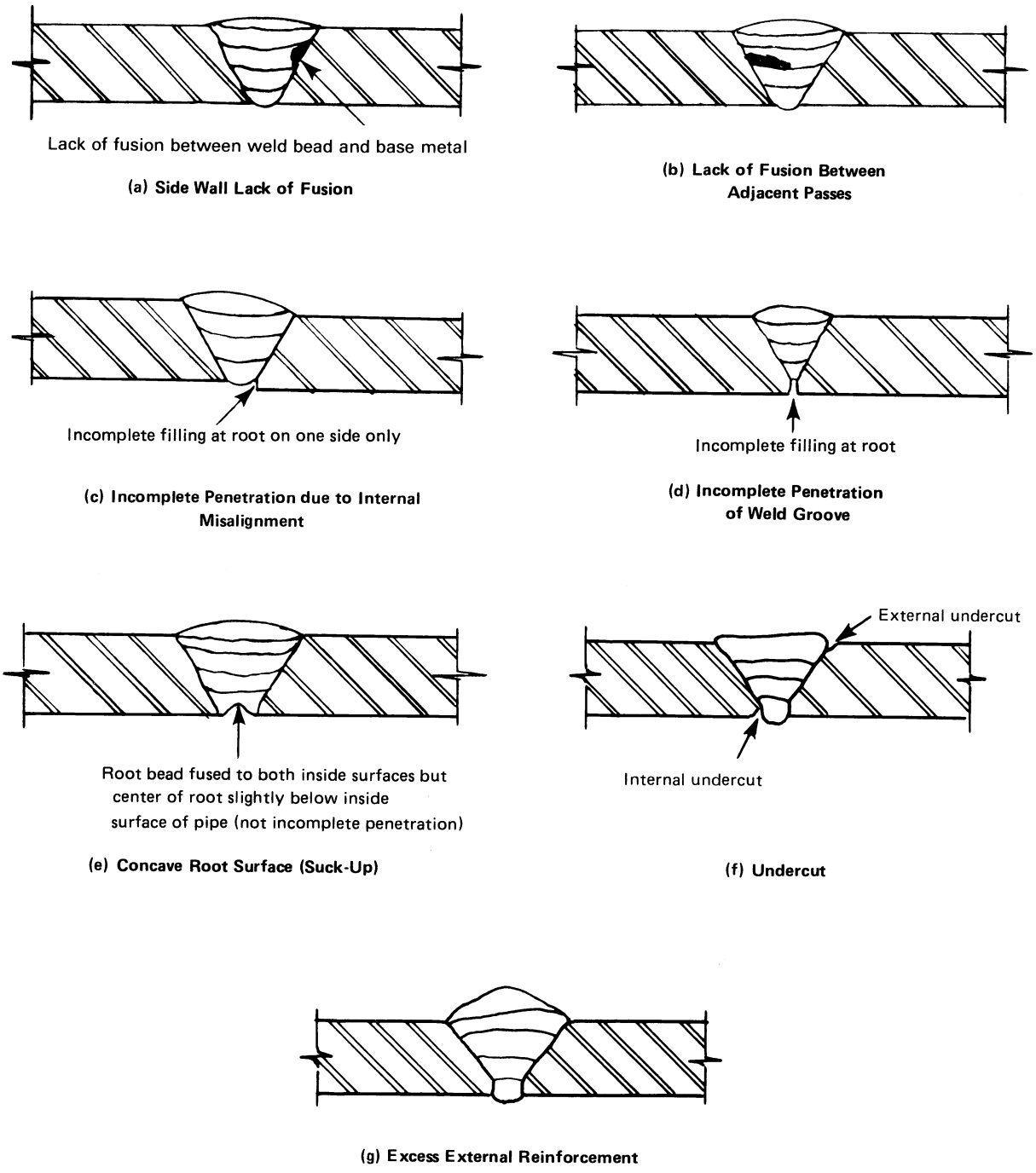

Copyright © 2015 by the American Society of Mechanical Engineers.
No reproduction may be made of this material without written consent of ASME.

(b) Other Examination

(1) Not less than 5% of circumferential butt and miter groove welds shall be examined fully by random radiography in accordance with para. 344.5 or by random ultrasonic examination in accordance with para. 344.6. The welds to be examined in each designated lot shall include the work product of each welder or welding operator whose welds are part of the lot. They shall also be selected to maximize coverage of intersections with longitudinal joints. When a circumferential weld with an intersecting longitudinal weld(s) is examined, at least the adjacent 38 mm ($1\frac{1}{2}$ in.) of each intersecting weld shall be examined. In-process examination in accordance with para. 344.7 may be substituted for all or part of the radiographic or ultrasonic examination on a weld-for-weld basis if specified in the engineering design or specifically authorized by the Inspector.

(2) Not less than 5% of all brazed joints shall be examined by in-process examination in accordance with para. 344.7, the joints to be examined being selected to ensure that the work of each brazer making the production joints is included.

(c) Certifications and Records. The examiner shall be assured, by examination of certifications, records, and other evidence, that the materials and components are of the specified grades and that they have received required heat treatment, examination, and testing. The examiner shall provide the Inspector with a certification that all the quality control requirements of the Code and of the engineering design have been carried out.

341.4.2 Examination — Category D Fluid Service. Piping and piping elements for Category D Fluid Service as designated in the engineering design shall be visually examined in accordance with para. 344.2 to the extent necessary to satisfy the examiner that components, materials, and workmanship conform to the requirements of this Code and the engineering design. Acceptance criteria are as stated in para. 341.3.2 and in Table 341.3.2, for Category D fluid service, unless otherwise specified.

341.4.3 Examination — Severe Cyclic Conditions. Piping to be used under severe cyclic conditions shall be examined to the extent specified herein or to any greater extent specified in the engineering design. Acceptance criteria are as stated in para. 341.3.2 and in Table 341.3.2, for severe cyclic conditions, unless otherwise specified.

(a) Visual Examination. The requirements of para. 341.4.1(a) apply with the following exceptions:

(1) All fabrication shall be examined.

(2) All threaded, bolted, and other joints shall be examined.

(3) All piping erection shall be examined to verify dimensions and alignment. Supports, guides, and points of cold spring shall be checked to ensure that movement of the piping under all conditions of startup, operation, and shutdown will be accommodated without undue binding or unanticipated constraint.

(b) Other Examination. All circumferential butt and miter groove welds and all fabricated branch connection welds comparable to those shown in Fig. 328.5.4E shall be examined by 100% radiography in accordance with para. 344.5, or (if specified in the engineering design) by 100% ultrasonic examination in accordance with para. 344.6. Socket welds and branch connection welds that are not radiographed shall be examined by magnetic particle or liquid penetrant methods in accordance with para. 344.3 or 344.4.

(c) In-process examination in accordance with para. 344.7, supplemented by appropriate nondestructive examination, may be substituted for the examination required in (b) above on a weld-for-weld basis if specified in the engineering design or specifically authorized by the Inspector.

(d) Certification and Records. The requirements of para. 341.4.1(c) apply.

341.4.4 Examination — Elevated Temperature Fluid Service. (14) Piping in Elevated Temperature Fluid Service shall be examined to the extent specified herein or to any greater extent specified in the engineering design. Acceptance criteria are as stated in para. 341.3.2 and in Table 341.3.2, for Normal Fluid Service, unless the requirements for severe cyclic conditions apply or otherwise specified.

(a) Visual Examination. The requirements of para. 341.4.1(a) apply with the following exceptions:

(1) All fabrication shall be examined.

(2) All threaded, bolted, and other joints shall be examined.

(3) All piping erection shall be examined to verify dimensions and alignment. Supports, guides, and points of cold spring shall be checked to ensure that movement of the piping under all conditions of startup, operation, and shutdown will be accommodated without undue binding or unanticipated constraint.

(b) Additional Examination. The examination requirements of para. 341.4.1(b) apply with the following exceptions:

(1) Fabrication for longitudinal and spiral (helical seam) welds in P-No. 4 and P-No. 5 materials, except those in components made in accordance with a listed specification, shall be examined by 100% radiography in accordance with para. 344.5, or by 100% ultrasonic examination in accordance with para. 344.6.

(2) Socket welds and branch connection welds in P-No. 4 and P-No. 5 materials that are not radiographed or ultrasonically examined shall be examined by magnetic particle or liquid penetrant methods in accordance with para. 344.3 or 344.4.

(c) Additional Examination Required for Autogenous Welds, Without Filler Metal, in Austenitic Stainless Steel

Copyright © 2015 by the American Society of Mechanical Engineers.
No reproduction may be made of this material without written consent of ASME.

and Austenitic High Nickel Alloys. Autogenously welded pipe shall receive nondestructive examination in accordance with the material specification. Autogenously welded expansion joint bellows shall be examined in accordance with para. X302.2.2(c).

(d) Certification and Records. The requirements of para. 341.4.1(c) apply.

341.5 Supplementary Examination

Any of the methods of examination described in para. 344 may be specified by the engineering design to supplement the examination required by para. 341.4. The extent of supplementary examination to be performed and any acceptance criteria that differ from those in para. 341.3.2 shall be specified in the engineering design.

341.5.1 Spot Radiography

(a) Longitudinal Welds. Spot radiography for longitudinal groove welds required to have a weld joint factor E_j of 0.90 requires examination by radiography in accordance with para. 344.5 of at least 300 mm (1 ft) in each 30 m (100 ft) of weld for each welder or welding operator. Acceptance criteria are those stated in Table 341.3.2 for radiography under Normal Fluid Service.

(b) Circumferential Butt Welds and Other Welds. It is recommended that the extent of examination be not less than one shot on one in each 20 welds for each welder or welding operator. Unless otherwise specified, acceptance criteria are as stated in Table 341.3.2 for radiography under Normal Fluid Service for the type of joint examined.

(c) Progressive Sampling for Examination. The provisions of para. 341.3.4 are applicable.

(d) Welds to Be Examined. The locations of welds and the points at which they are to be examined by spot radiography shall be selected or approved by the Inspector.

341.5.2 Hardness Tests. The extent of hardness testing required shall be in accordance with para. 331.1.7 except as otherwise specified in the engineering design.

341.5.3 Examinations to Resolve Uncertainty. Any method may be used to resolve doubtful indications. Acceptance criteria shall be those for the required examination.

342 EXAMINATION PERSONNEL

(14) ### 342.1 Personnel Qualification and Certification

Personnel performing nondestructive examination to the requirements of this Code shall be qualified and certified for the method to be utilized following a procedure as described in BPV Code, Section V, Article 1, T-120(e) or (f).

342.2 Specific Requirement

For in-process examination, the examinations shall be performed by personnel other than those performing the production work.

343 EXAMINATION PROCEDURES

Any examination shall be performed in accordance with a written procedure that conforms to one of the methods specified in para. 344, including special methods (see para. 344.1.2). Procedures shall be written as required in the BPV Code, Section V, Article 1, T-150. The employer shall certify records of the examination procedures employed, showing dates and results of procedure qualifications, and shall maintain them and make them available to the Inspector.

344 TYPES OF EXAMINATION

344.1 General

344.1.1 Methods. Except as provided in para. 344.1.2, any examination required by this Code, by the engineering design, or by the Inspector shall be performed in accordance with one of the methods specified herein.

344.1.2 Special Methods. If a method not specified herein is to be used, it and its acceptance criteria shall be specified in the engineering design in enough detail to permit qualification of the necessary procedures and examiners.

344.1.3 Definitions. The following terms apply to any type of examination:

100% examination: complete examination of all of a specified kind of item in a designated lot of piping[1]

random examination:[2] complete examination of a percentage of a specified kind of item in a designated lot of piping[1]

spot examination:[2] a specified partial examination of each of a specified kind of item in a designated lot of piping,[1] e.g., of part of the length of all shop-fabricated welds in a lot of jacketed piping

[1] A designated lot is that quantity of piping to be considered in applying the requirements for examination in this Code. The quantity or extent of a designated lot should be established by agreement between the contracting parties before the start of work. More than one kind of designated lot may be established for different kinds of piping work. See Pipe Fabrication Institute Standard ES-48, Random Examination, for examples of lot selection.

[2] Random or spot examination will not ensure a fabrication product of a prescribed quality level throughout. Items not examined in a lot of piping represented by such examination may contain defects that further examination could disclose. Specifically, if all radiographically disclosable weld defects must be eliminated from a lot of piping, 100% radiographic examination must be specified.

Copyright © 2015 by the American Society of Mechanical Engineers.
No reproduction may be made of this material without written consent of ASME.

random spot examination:[2] a specified partial examination of a percentage of a specified kind of item in a designated lot of piping[1]

344.2 Visual Examination

344.2.1 Definition. Visual examination is observation of the portion of components, joints, and other piping elements that are or can be exposed to view before, during, or after manufacture, fabrication, assembly, erection, examination, or testing. This examination includes verification of Code and engineering design requirements for materials, components, dimensions, joint preparation, alignment, welding, bonding, brazing, bolting, threading, or other joining method, supports, assembly, and erection.

344.2.2 Method. Visual examination shall be performed in accordance with the BPV Code, Section V, Article 9. Records of individual visual examinations are not required, except for those of in-process examination as specified in para. 344.7.

(14) 344.3 Magnetic Particle Examination

344.3.1 Method. Examination of castings is covered in para. 302.3.3. Magnetic particle examination of welds and of components other than castings shall be performed in accordance with BPV Code, Section V, Article 7.

344.3.2 Acceptance Criteria. Magnetic particle indications are caused by the attraction of the test media to surface or near-surface discontinuities in the area under test. However, all such indications are not necessarily imperfections, since excessive roughness, magnetic permeability variations, etc., may produce nonrelevant indications. Inadvertent accumulation of particles not related to magnetic attraction is classified as a false indication. Indications shall be verified as being relevant, nonrelevant, or false. Additional surface preparation and/or other test methods may be used as needed to verify the relevance of an indication.

An indication of an imperfection may be larger than the imperfection that causes it; however, the size of the indication is the basis for acceptance evaluation. Only indications that have any dimension greater than 1.5 mm ($\frac{1}{16}$ in.) shall be considered relevant.

(a) Indications

(1) A linear indication is one having a length greater than three times its width.

(2) A rounded indication is one of circular or elliptical shape with a length equal to or less than three times its width.

(b) Examination. All surfaces to be examined shall be free of

(1) relevant linear indications

(2) relevant rounded indications >5.0 mm ($\frac{3}{16}$ in.)

(3) four or more relevant rounded indications in a line separated by 1.5 mm ($\frac{1}{16}$ in.) or less, edge to edge

344.4 Liquid Penetrant Examination (14)

344.4.1 Method. Examination of castings is covered in para. 302.3.3. Liquid penetrant examination of welds and of components other than castings shall be performed in accordance with BPV Code, Section V, Article 6.

344.4.2 Acceptance Criteria. Liquid penetrant indications are caused by the bleed-out of a visible or fluorescent dye from a surface discontinuity in the area under test. However, all such indications are not necessarily imperfections, since excessive roughness, poor surface preparation, etc., may produce nonrelevant indications. Inadvertent evidence of penetrant not related to actual bleed-out is classified as a false indication. Indications shall be verified as being relevant, nonrelevant, or false. Additional surface preparation and/or other test methods may be used as needed to verify the relevance of an indication.

An indication of an imperfection may be larger than the imperfection that causes it; however, the size of the indication is the basis for acceptance evaluation. Only indications that have any dimension greater than 1.5 mm ($\frac{1}{16}$ in.) shall be considered relevant.

(a) Indications

(1) A linear indication is one having a length greater than three times its width.

(2) A rounded indication is one of circular or elliptical shape with a length equal to or less than three times its width.

(b) Examination. All surfaces to be examined shall be free of

(1) relevant linear indications

(2) relevant rounded indications >5.0 mm ($\frac{3}{16}$ in.)

(3) four or more relevant rounded indications in a line separated by 1.5 mm ($\frac{1}{16}$ in.) or less, edge to edge

344.5 Radiographic Examination

344.5.1 Method. Radiography of castings is covered in para. 302.3.3. Radiography of welds and of components other than castings shall be performed in accordance with BPV Code, Section V, Article 2.

344.5.2 Extent of Radiography

(a) 100% Radiography. This applies only to girth and miter groove welds and to fabricated branch connection welds comparable to Fig. 328.5.4E, unless otherwise specified in the engineering design.

(b) Random Radiography. This applies only to girth and miter groove welds.

(c) Spot Radiography. This requires a single exposure radiograph in accordance with para. 344.5.1 at a point within a specified extent of welding. For girth, miter, and branch groove welds the minimum requirement is

Copyright © 2015 by the American Society of Mechanical Engineers.
No reproduction may be made of this material without written consent of ASME.

(1) for sizes ≤ DN 65 (NPS 2½), a single elliptical exposure encompassing the entire weld circumference

(2) for sizes > DN 65, the lesser of 25% of the inside circumference or 152 mm (6 in.)

For longitudinal welds the minimum requirement is 152 mm (6 in.) of weld length.

344.6 Ultrasonic Examination

344.6.1 Method. Examination of castings is covered in para. 302.3.3; other product forms are not covered. Ultrasonic examination of welds shall be performed in accordance with BPV Code, Section V, Article 4, except that the alternative specified in (a) and (b) below is permitted for basic calibration blocks specified in T-434.2.1 and T-434.3.

(a) When the basic calibration blocks have not received heat treatment in accordance with T-434.1.5, transfer methods shall be used to correlate the responses from the basic calibration block and the component. Transfer is accomplished by noting the difference between responses received from the same reference reflector in the basic calibration block and in the component and correcting for the difference.

(b) The reference reflector may be a V-notch (which must subsequently be removed), an angle beam search unit acting as a reflector, or any other reflector that will aid in accomplishing the transfer.

(c) When the transfer method is chosen as an alternative, it shall be used, at the minimum

(1) for sizes ≤ DN 50 (NPS 2), once in each 10 welded joints examined

(2) for sizes > DN 50 and ≤ DN 450 (NPS 18), once in each 1.5 m (5 ft) of welding examined

(3) for sizes > DN 450, once for each welded joint examined

(d) Each type of material and each size and wall thickness shall be considered separately in applying the transfer method. In addition, the transfer method shall be used at least twice on each type of weld joint.

(e) The reference level for monitoring discontinuities shall be modified to reflect the transfer correction when the transfer method is used.

344.6.2 Acceptance Criteria. A linear-type discontinuity is unacceptable if the amplitude of the indication exceeds the reference level and its length exceeds

(a) 6 mm (¼ in.) for $\overline{T}_w \leq 19$ mm (¾ in.)

(b) $\overline{T}_w/3$ for 19 mm < $\overline{T}_w \leq 57$ mm (2¼ in.)

(c) 19 mm for $\overline{T}_w > 57$ mm

344.7 In-Process Examination

344.7.1 Definition. In-process examination comprises examination of the following, as applicable:

(a) joint preparation and cleanliness

(b) preheating

(c) fit-up, joint clearance, and internal alignment prior to joining

(d) variables specified by the joining procedure, including filler material

(1) (for welding) position and electrode

(2) (for brazing) position, flux, brazing temperature, proper wetting, and capillary action

(e) (for welding) condition of the root pass after cleaning — external and, where accessible, internal — aided by liquid penetrant or magnetic particle examination when specified in the engineering design

(f) (for welding) slag removal and weld condition between passes

(g) appearance of the finished joint

344.7.2 Method. The examination is visual, in accordance with para. 344.2, unless additional methods are specified in the engineering design.

345 TESTING

345.1 Required Leak Test

Prior to initial operation, and after completion of the applicable examinations required by para. 341, each piping system shall be tested to ensure tightness. The test shall be a hydrostatic leak test in accordance with para. 345.4 except as provided herein.

(a) At the owner's option, a piping system in Category D fluid service may be subjected to an initial service leak test in accordance with para. 345.7, in lieu of the hydrostatic leak test.

(b) Where the owner considers a hydrostatic leak test impracticable, either a pneumatic test in accordance with para. 345.5 or a combined hydrostatic-pneumatic test in accordance with para. 345.6 may be substituted, recognizing the hazard of energy stored in compressed gas.

(c) Where the owner considers both hydrostatic and pneumatic leak testing impracticable, the alternative specified in para. 345.9 may be used if both of the following conditions apply:

(1) a hydrostatic test would

(a) damage linings or internal insulation

(b) contaminate a process that would be hazardous, corrosive, or inoperative in the presence of moisture

(c) require significant support modifications for the hydrostatic test load or

(d) present the danger of brittle fracture due to low metal temperature during the test

(2) a pneumatic test would

(a) present an undue hazard of possible release of energy stored in the system or

(b) present the danger of brittle fracture due to low metal temperature during the test

(d) Unless specified in the engineering design, lines open to the atmosphere, such as vents or drains downstream of the last shutoff valve, need not be leak tested.

Copyright © 2015 by the American Society of Mechanical Engineers.
No reproduction may be made of this material without written consent of ASME.

345.2 General Requirements for Leak Tests

Requirements in para. 345.2 apply to more than one type of leak test.

(14) **345.2.1 Limitations on Pressure**

(a) Stress Exceeding Yield Strength. If the test pressure would produce a circumferential pressure or longitudinal stress (based on minimum pipe wall thickness) in excess of yield strength at test temperature, the test pressure may be reduced to the maximum pressure that will not exceed the yield strength at test temperature. [See paras. 302.3.2(e) and (f).]

(b) Test Fluid Expansion. If a pressure test is to be maintained for a period of time and the test fluid in the system is subject to thermal expansion, precautions shall be taken to avoid excessive pressure.

(c) Preliminary Pneumatic Test. A preliminary test using air at no more than 170 kPa (25 psi) gage pressure may be made prior to hydrostatic testing to locate major leaks.

(14) **345.2.2 Other Test Requirements**

(a) Examination for Leaks. The leak test pressure shall be maintained for at least 10 min and then all joints and connections shall be examined for leaks. The test pressure may be reduced to not less than the design pressure while performing this examination.

(b) Heat Treatment. Leak tests shall be conducted after any heat treatment has been completed.

(c) Low Test Temperature. The possibility of brittle fracture shall be considered when conducting leak tests at metal temperatures near the ductile-brittle transition temperature.

345.2.3 Special Provisions for Testing

(a) Piping Components and Subassemblies. Piping components and subassemblies may be tested either separately or as assembled piping.

(b) Flanged Joints. Flanged joints used to connect piping components and subassemblies that have previously been tested, and flanged joints at which a blank or blind is used to isolate equipment or other piping during a test, need not be leak tested in accordance with para. 345.1.

(c) Closure Welds. The final weld connecting piping systems or components that have been successfully tested in accordance with para. 345 need not be leak tested provided the weld is examined in-process in accordance with para. 344.7 and passes with 100% radiographic examination in accordance with para. 344.5 or 100% ultrasonic examination in accordance with para. 344.6.

345.2.4 Externally Pressured Piping. Piping subject to external pressure shall be tested at an internal gage pressure 1.5 times the external differential pressure, but not less than 105 kPa (15 psi).

345.2.5 Jacketed Piping

(a) The internal line shall be leak tested on the basis of the internal or external design pressure, whichever is critical. This test must be performed before the jacket is completed if it is necessary to provide visual access to joints of the internal line as required by para. 345.3.1.

(b) The jacket shall be leak tested in accordance with para. 345.1 on the basis of the jacket design pressure unless otherwise specified in the engineering design.

345.2.6 Repairs or Additions After Leak Testing. If repairs or additions are made following the leak test, the affected piping shall be retested, except that for minor repairs or additions the owner may waive retest requirements when precautionary measures are taken to assure sound construction.

345.2.7 Test Records. Records shall be made of each piping system during the testing, including

(a) date of test
(b) identification of piping system tested
(c) test fluid
(d) test pressure
(e) certification of results by examiner

These records need not be retained after completion of the test if a certification by the Inspector that the piping has satisfactorily passed pressure testing as required by this Code is retained.

345.3 Preparation for Leak Test

345.3.1 Joints Exposed. All joints, welds (including structural attachment welds to pressure-containing components), and bonds shall be left uninsulated and exposed for examination during leak testing, except that joints previously tested in accordance with this Code may be insulated or covered. All joints may be primed and painted prior to leak testing unless a sensitive leak test (para. 345.8) is required.

345.3.2 Temporary Supports. Piping designed for vapor or gas shall be provided with additional temporary supports, if necessary, to support the weight of test liquid.

345.3.3 Piping With Expansion Joints

(a) Unrestrained expansion joints depend on external main anchors to resist pressure thrust forces. Except as limited in para. 345.3.3(c), a piping system containing unrestrained expansion joints shall be leak tested without any temporary restraints in accordance with para. 345 up to 150% of the expansion joint design pressure. If the required test pressure exceeds 150% of the expansion joint design pressure and the main anchors are not designed to resist the pressure thrust forces at the required test pressure, for that portion of the test when the pressure exceeds 150% of the expansion joint design pressure, the expansion joint shall either be temporarily removed or temporary restraints shall be added to resist the pressure thrust forces.

Copyright © 2015 by the American Society of Mechanical Engineers.
No reproduction may be made of this material without written consent of ASME.

(b) Self-restrained metallic bellows expansion joints (i.e., tied, hinged, pressure balanced, etc.) have restraint hardware designed to resist the pressure thrust forces. Except as limited in para. 345.3.3(c), a piping system containing self-restrained expansion joints shall be leak tested in accordance with para. 345. A self-restrained expansion joint previously shop tested by the manufacturer in accordance with Appendix X may be excluded from the system to be leak tested, except when a sensitive leak test in accordance with para. 345.8 is required. Restraint hardware for all types of expansion joints shall be designed for the pressure thrust forces at the test pressure.

(c) When a metallic bellows expansion joint is installed in the piping system subject to a leak test and the leak test pressure determined in accordance with para. 345 exceeds the pressure of the test performed by the manufacturer in accordance with Appendix X, the required leak test pressure shall be reduced to the manufacturer's test pressure.

345.3.4 Limits of Tested Piping. Equipment that is not to be tested shall be either disconnected from the piping or isolated by blinds or other means during the test. A valve may be used provided the valve (including its closure mechanism) is suitable for the test pressure.

345.4 Hydrostatic Leak Test

345.4.1 Test Fluid. The fluid shall be water unless there is the possibility of damage due to freezing or to adverse effects of water on the piping or the process (see para. F345.4.1). In that case another suitable nontoxic liquid may be used. If the liquid is flammable, its flash point shall be at least 49°C (120°F), and consideration shall be given to the test environment.

(14) **345.4.2 Test Pressure.** Except as provided in para. 345.4.3, the hydrostatic test pressure at every point in a metallic piping system shall be as follows:

(a) not less than 1.5 times the design pressure.

(b) when the design temperature is greater than the test temperature, the minimum test pressure, at the point under consideration, shall be calculated using eq. (24).

$$P_T = 1.5\ PS_T/S \tag{24}$$

where

P = internal design gage pressure

P_T = minimum test gage pressure

S = allowable stress at component design temperature for the prevalent pipe material; see Table A-1

S_T = allowable stress at test temperature for the prevalent pipe material; see Table A-1

(c) in those cases where the piping system may not include pipe itself, any other component in the piping system, other than pipe-supporting elements and bolting, may be used to determine the S_T/S ratio based on the applicable allowable stresses obtained from Table A-1. In those cases where the piping system may be made up of equivalent lengths of more than one material, the S_T/S ratio shall be based on the minimum calculated ratio of the included materials.

(d) if the test pressure as defined above would produce a circumferential pressure or longitudinal stress (based on minimum pipe wall thickness) in excess of the yield strength at test temperature or a pressure more than 1.5 times the component rating at test temperature, the test pressure may be reduced to the maximum pressure that will not exceed the lesser of the yield strength or 1.5 times the component ratings at test temperature. [See paras. 302.3.2(e) and (f).] For metallic bellows expansion joints, see Appendix X, para. X302.2.3(a).

345.4.3 Hydrostatic Test of Piping With Vessels as a System [3]

(a) Where the test pressure of piping attached to a vessel is the same as or less than the test pressure for the vessel, the piping may be tested with the vessel at the piping test pressure.

(b) Where the test pressure of the piping exceeds the vessel test pressure, and it is not considered practicable to isolate the piping from the vessel, the piping and the vessel may be tested together at the vessel test pressure, provided the owner approves and the vessel test pressure is not less than 77% of the piping test pressure calculated in accordance with para. 345.4.2(b).

345.5 Pneumatic Leak Test

345.5.1 Precautions. Pneumatic testing involves the hazard of released energy stored in compressed gas. Particular care must therefore be taken to minimize the chance of brittle failure during a pneumatic leak test. Test temperature is important in this regard and must be considered when the designer chooses the material of construction. See para. 345.2.2(c) and Appendix F, paras. F323.4 and F345.5.1.

345.5.2 Pressure Relief Device. A pressure relief device shall be provided, having a set pressure not higher than the test pressure plus the lesser of 345 kPa (50 psi) or 10% of the test pressure.

345.5.3 Test Fluid. The gas used as test fluid, if not air, shall be nonflammable and nontoxic.

345.5.4 Test Pressure. The test pressure shall be (14)
not less than 1.1 times the design pressure and shall not exceed the lesser of

(a) 1.33 times the design pressure

(b) the pressure that would produce a circumferential pressure or longitudinal stress (based on minimum pipe

[3] The provisions of para. 345.4.3 do not affect the pressure test requirements of any applicable vessel code.

Copyright © 2015 by the American Society of Mechanical Engineers.
No reproduction may be made of this material without written consent of ASME.

wall thickness) in excess of 90% of the yield strength of any component at the test temperature

345.5.5 Procedure. The pressure shall be gradually increased until a gage pressure that is the lesser of one-half the test pressure or 170 kPa (25 psi) is attained, at which time a preliminary check shall be made, including examination of joints in accordance with para. 341.4.1(a). Thereafter, the pressure shall be gradually increased in steps until the test pressure is reached, holding the pressure at each step long enough to equalize piping strains. The pressure shall then be reduced to the design pressure before examining for leakage in accordance with para. 345.2.2(a).

345.6 Hydrostatic-Pneumatic Leak Test

If a combination hydrostatic-pneumatic leak test is used, the requirements of para. 345.5 shall be met, and the pressure in the liquid filled part of the piping shall not exceed the limits stated in para. 345.4.2.

345.7 Initial Service Leak Test

This test is applicable only to piping in Category D Fluid Service, at the owner's option. See para. 345.1(a).

345.7.1 Test Fluid. The test fluid is the service fluid.

345.7.2 Procedure. During or prior to initial operation, the pressure shall be gradually increased in steps until the operating pressure is reached, holding the pressure at each step long enough to equalize piping strains. A preliminary check shall be made as described in para. 345.5.5 if the service fluid is a gas or vapor.

345.7.3 Examination for Leaks. The examination for leaks required by para. 345.2.2(a) shall be conducted while the system is at operating pressure. It is permissible to omit examination for leaks of joints and connections previously tested in accordance with this Code.

345.8 Sensitive Leak Test

The test shall be the Bubble Test — Direct Pressure Technique in accordance with the BPV Code, Section V, Article 10, Appendix I or another leak test method that has a demonstrated sensitivity not less than 10^{-3} std ml/s under test conditions.

When the Bubble Test — Direct Pressure Technique is used

(a) the test pressure shall be at least the lesser of 105 kPa (15 psi) gage or 25% of the design pressure.

(b) the pressure shall be gradually increased until a gage pressure equal to the lesser of one-half the test pressure or 170 kPa (25 psi) is attained, at which time a preliminary check shall be made. Then the pressure shall be gradually increased in steps until the test pressure is reached, the pressure being held long enough at each step to equalize piping strains.

345.9 Alternative Leak Test

The following procedures and leak test method may be used only under the conditions stated in para. 345.1(c).

345.9.1 Examination of Welds. Welds, including those used in the manufacture of welded pipe and fittings, that have not been subjected to hydrostatic or pneumatic leak tests in accordance with this Code, shall be examined as follows:

(a) Circumferential, longitudinal, and spiral (helical seam) groove welds shall be 100% radiographed in accordance with para. 344.5 or 100% ultrasonically examined in accordance with para. 344.6.

(b) All welds, including structural attachment welds, not covered in (a) above, shall be examined using the liquid penetrant method (para. 344.4) or, for magnetic materials, the magnetic particle method (para. 344.3).

345.9.2 Flexibility Analysis. A flexibility analysis of the piping system shall have been made in accordance with the requirements of para. 319.4.2 (b), if applicable, or (c) and (d).

345.9.3 Test Method. The system shall be subjected to a sensitive leak test in accordance with para. 345.8.

346 RECORDS

346.2 Responsibility

It is the responsibility of the piping designer, the manufacturer, the fabricator, and the erector, as applicable, to prepare the records required by this Code and by the engineering design.

346.3 Retention of Records

Unless otherwise specified by the engineering design, the following records shall be retained for at least 5 years after the record is generated for the project:

(a) examination procedures

(b) examination personnel qualifications

Copyright © 2015 by the American Society of Mechanical Engineers.
No reproduction may be made of this material without written consent of ASME.

Chapter VII
Nonmetallic Piping and Piping Lined With Nonmetals

A300 GENERAL STATEMENTS

(a) Chapter VII pertains to nonmetallic piping and to piping lined with nonmetals.

(b) The organization, content, and paragraph designations of this Chapter correspond to those of the first six Chapters (the base Code). The prefix A is used.

(c) Provisions and requirements of the base Code apply only as stated in this Chapter.

(d) Metallic piping that provides the pressure containment for a nonmetallic lining shall conform to the requirements of Chapters I through VI, and to those in Chapter VII not limited to nonmetals.

(e) This Chapter makes no provision for piping to be used under severe cyclic conditions.

(f) With the exceptions stated above, Chapter I applies in its entirety.

PART 1
CONDITIONS AND CRITERIA

A301 DESIGN CONDITIONS

Paragraph 301 applies in its entirety, with the exception of paras. 301.2 and 301.3. See below.

A301.2 Design Pressure

Paragraph 301.2 applies in its entirety, except that references to paras. A302.2.4 and A304 replace references to paras. 302.2.4 and 304, respectively.

A301.3 Design Temperature

Paragraph 301.3 applies with the following exceptions.

A301.3.1 Design Minimum Temperature. Paragraph 301.3.1 applies; but see para. A323.2.2, rather than para. 323.2.2.

A301.3.2 Uninsulated Components. The component design temperature shall be the fluid temperature, unless a higher temperature will result from solar radiation or other external heat sources.

A302 DESIGN CRITERIA

Paragraph A302 states pressure–temperature ratings, stress criteria, design allowances, and minimum design values, together with permissible variations of these factors as applied to the design of piping.

A302.1 General

The designer shall be satisfied as to the adequacy nonmetallic material and its manufacture, considering at least the following:

(a) tensile, compressive, flexural, and shear strength, and modulus of elasticity, at design temperature (long term and short term)

(b) creep rate at design conditions

(c) design stress and its basis

(d) ductility and plasticity

(e) impact and thermal shock properties

(f) temperature limits

(g) transition temperature — melting and vaporization

(h) porosity and permeability

(i) testing methods

(j) methods of making joints and their efficiency

(k) possibility of deterioration in service

A302.2 Pressure–Temperature Design Criteria

A302.2.1 Listed Components Having Established Ratings. Paragraph 302.2.1 applies, except that reference to Table A326.1 replaces reference to Table 326.1.

A302.2.2 Listed Components Not Having Specific Ratings. Nonmetallic piping components for which design stresses have been developed in accordance with para. A302.3, but which do not have specific pressure–temperature ratings, shall be rated by rules for pressure design in para. A304, within the range of temperatures for which stresses are shown in Appendix B, modified as applicable by other rules of this Code.

Piping components that do not have allowable stresses or pressure–temperature ratings shall be qualified for pressure design as required by para. A304.7.2.

A302.2.3 Unlisted Components. Paragraph 302.2.3 applies, except that references to Table A326.1 and paras. A304 and A304.7.2 replace references to Table 326.1 and paras. 304 and 304.7.2, respectively.

A302.2.4 Allowances for Pressure and Temperature Variations

(a) Nonmetallic Piping. Allowances for variations of pressure or temperature, or both, above design conditions are not permitted. The most severe conditions of coincident pressure and temperature shall be used to determine the design conditions for a piping system. See paras. 301.2 and 301.3.

Copyright © 2015 by the American Society of Mechanical Engineers.
No reproduction may be made of this material without written consent of ASME.

(b) Metallic Piping With Nonmetallic Lining. Allowances for pressure and temperature variations provided in para. 302.2.4 are permitted only if the suitability of the lining material for the increased conditions is established through prior successful service experience or tests under comparable conditions.

A302.2.5 Rating at Junction of Different Services. When two services that operate at different pressure–temperature conditions are connected, the valve segregating the two services shall be rated for the more severe service condition.

A302.3 Allowable Stresses and Other Design Limits

A302.3.1 General

(a) Table B-1 contains hydrostatic design stresses (HDS). Tables B-2 and B-3 provide listings of specifications that meet the criteria of paras. A302.3.2(b) and (c), respectively. Tables B-4 and B-5 contain allowable pressures. These HDS values, allowable stress criteria, and pressures shall be used in accordance with the Notes to Appendix B, and may be used in design calculations (where the allowable stress *S* means the appropriate design stress) except as modified by other provisions of this Code. Use of hydrostatic design stresses for calculations other than pressure design has not been verified. The bases for determining allowable stresses and pressures are outlined in para. A302.3.2.

(b) The stresses and allowable pressures are grouped by materials and listed for stated temperatures. Straight-line interpolation between temperatures is permissible.

A302.3.2 Bases for Allowable Stresses and Pressures [1]

(a) Thermoplastics. The method of determining HDS is described in ASTM D2837. HDS values are given in Table B-1 for those materials and temperatures for which sufficient data have been compiled to substantiate the determination of stress.

(b) Reinforced Thermosetting Resin (Laminated). The design stress (DS) values for materials listed in Table B-2 shall be one-tenth of the minimum tensile strengths specified in Table 1 of ASTM C582 and are valid only in the temperature range from −29°C (−20°F) through 82°C (180°F).

(c) Reinforced Thermosetting Resin and Reinforced Plastic Mortar (Filament Wound and Centrifugally Cast). The hydrostatic design basis stress (HDBS) values for materials listed in Table B-3 shall be obtained by the procedures in ASTM D2992 and are valid only at 23°C (73°F). HDS shall be obtained by multiplying the HDBS by a service (design) factor[2] selected for the application, in accordance with procedures described in ASTM D2992, within the following limits:

(1) When using the cyclic HDBS, the service (design) factor *F* shall not exceed 1.0.

(2) When using the static HDBS, the service (design) factor *F* shall not exceed 0.5.

(d) Other Materials. Allowable pressures in Tables B-4 and B-5 have been determined conservatively from physical properties of materials conforming to the listed specifications, and have been confirmed by extensive experience. Use of other materials shall be qualified as required by para. A304.7.2.

A302.3.3 Limits of Calculated Stresses Due to Sustained Loads [1]

(a) Internal Pressure Stresses. Limits of stress due to internal pressure are covered in para. A304.

(b) External Pressure Stresses. Stresses due to uniform external pressure shall be considered safe when the wall thickness of the component and its means of stiffening have been qualified as required by para. A304.7.2.

(c) External Loading Stresses. Design of piping under external loading shall be based on the following:

(1) Thermoplastic Piping. ASTM D2321 or AWWA C900.

(2) Reinforced Thermosetting Resin (RTR) and Reinforced Plastic Mortar (RPM) Piping. ASTM D3839 or Appendix A of AWWA C950.

(3) Strain and possible buckling shall be considered when determining the maximum allowable deflection in (1) or (2) above, but in no case shall the allowable diametral deflection exceed 5% of the pipe inside diameter.

(4) Nonmetallic piping not covered in (1) or (2) above shall be subjected to a crushing or three-edge bearing test in accordance with ASTM C14 or C301; the allowable load shall be 25% of the minimum value obtained.

---

[1] Titles of ASTM Specifications and AWWA Standards referenced herein are as follows:
ASTM C14, Concrete Sewer, Storm Drain, and Culvert Pipe
ASTM C301, Method of Testing Vitrified Clay Pipe
ASTM C582, Contact-Molded Reinforced Thermosetting Plastic (RTP) Laminates for Corrosion Resistant Equipment
ASTM D2321, Practice for Underground Installation of Thermoplastic Pipe for Sewers and Other Gravity-Flow Applications
ASTM D2837, Test Method for Obtaining Hydrostatic Design Basis for Thermoplastic Pipe Materials or Pressure Design Basis for Thermoplastic Pipe Products
ASTM D2992, Practice for Obtaining Hydrostatic or Pressure Design Basis for "Fiberglass" (Glass-Fiber-RTR) Pipe and Fittings
ASTM D3839, Underground Installation of Fiberglass Pipe
AWWA C900, PVC Pressure Pipe, 4-inch through 12-inch, for Water
AWWA C950, Glass-Fiber-Reinforced Thermosetting Resin Pressure Pipe

[2] The service (design) factor, *F*, should be selected by the designer after evaluating fully the service conditions and the engineering properties of the specific material under consideration. Aside from the limits in paras. A302.3.2(c)(1) and (2), it is not the intent of this Code to specify service (design) factors.

Copyright © 2015 by the American Society of Mechanical Engineers.
No reproduction may be made of this material without written consent of ASME.

A302.3.4 Limits of Calculated Stresses Due to Occasional Loads

(a) Operation. The sum of the stresses in any component in a piping system due to sustained loads, such as pressure and weight, and of the stresses produced by occasional loads, such as wind or earthquake, shall not exceed the limits in the applicable part of para. A302.3.3. Wind and earthquake forces need not be considered as acting concurrently.

(b) Test. Stresses due to test conditions are not subject to the limitations in para. A302.3.3. It is not necessary to consider other occasional loads, such as wind and earthquake, as occurring concurrently with test loads.

A302.4 Allowances

Paragraph 302.4 applies in its entirety.

PART 2
PRESSURE DESIGN OF PIPING COMPONENTS

A303 GENERAL

Paragraph 303 applies, except that references to Table A326.1 and para. A302.2.1 replace references to Table 326.1 and para. 302.2.1. For nonmetallic components, reference to para. A304 replaces reference to para. 304.

A304 PRESSURE DESIGN OF PIPING COMPONENTS

A304.1 Straight Pipe

A304.1.1 General

(a) The required thickness of straight sections of pipe shall be determined by eq. (25).

$$t_m = t + c \tag{25}$$

The minimum thickness T for the pipe selected, considering manufacturer's minus tolerance, shall be not less than t_m.

(b) The following nomenclature is used in the equations for pressure design of straight pipe:

c = the sum of mechanical allowances (thread or groove depth) plus corrosion and erosion allowance. For threaded components, the nominal thread depth (dimension h of ASME B1.20.1 or equivalent) shall apply. For machined surfaces or grooves where the tolerance is not specified, the tolerance shall be assumed to be 0.5 mm (0.02 in.) in addition to the specified depth of the cut.

D = outside diameter of pipe

F = service (design) factor. See para. A302.3.2(c).

P = internal design gage pressure

S = design stress from applicable Table in Appendix B

T = pipe wall thickness (measured or minimum in accordance with the purchase specification)

t = pressure design thickness, as calculated in accordance with para. A304.1.2 for internal pressure or as determined in accordance with para. A304.1.3 for external pressure

t_m = minimum required thickness, including mechanical, corrosion, and erosion allowances

A304.1.2 Straight Nonmetallic Pipe Under Internal Pressure. The internal pressure design thickness, t, shall be not less than that calculated by one of the following equations, using stress values listed in or derived from the appropriate table in Appendix B:

(a) Thermoplastic Pipe [See Para. A302.3.2(a)]

$$t = \frac{PD}{2S + P} \text{ (Table B-1)} \tag{26a}$$

(b) RTR (Laminated) Pipe [See Para. A302.3.2(b)]

$$t = \frac{PD}{2S + P} \text{ (Table B-2)} \tag{26b}$$ [3]

(c) RTR (Filament Wound) and RPM (Centrifugally Cast) Pipe [See Para. A302.3.2(c)]

$$t = \frac{PD}{2SF + P} \text{ (Table B-3)} \tag{26c}$$ [3]

A304.1.3 Straight Pipe Under External Pressure

(a) Nonmetallic Pipe. The external pressure design thickness, t, shall be qualified as required by para. A304.7.2.

(b) Metallic Pipe Lined With Nonmetals

(1) The external pressure design thickness, t, for the base (outer) material shall be determined in accordance with para. 304.1.3.

(2) The external pressure design thickness, t, for the lining material shall be qualified as required by para. A304.7.2.

A304.2 Curved and Mitered Segments of Pipe

A304.2.1 Pipe Bends. The minimum required thickness, t_m, of a bend, after bending, shall be determined as for straight pipe in accordance with para. A304.1.

A304.2.2 Elbows. Manufactured elbows not in accordance with para. A303 shall be qualified as required by para. A304.7.2.

A304.2.3 Miter Bends. Miter bends shall be qualified as required by para. A304.7.2.

A304.3 Branch Connections

A304.3.1 General. A pipe having a branch connection is weakened by the opening that must be made in

[3] The internal design pressure thickness t shall not include any thickness of the pipe wall reinforced with less than 20% by weight of reinforcing fibers.

Copyright © 2015 by the American Society of Mechanical Engineers.
No reproduction may be made of this material without written consent of ASME.

it and, unless the wall thickness of the pipe is sufficiently in excess of that required to sustain the pressure, it is necessary to provide added reinforcement. The amount of reinforcement shall be qualified as required by para. A304.7.2 except as provided in para. A304.3.2.

A304.3.2 Branch Connections Using Fittings. It may be assumed without calculation that a branch connection has adequate strength to sustain the internal and external pressure that will be applied to it if it utilizes a fitting (a tee, lateral, or cross) in accordance with para. A303.

A304.3.3 Additional Design Considerations. The requirements of paras. A304.3.1 and A304.3.2 are intended to assure satisfactory performance of a branch connection subjected only to internal or external pressure. The designer shall also consider paras. 304.3.5(a), (c), and (d).

A304.4 Closures

Closures not in accordance with para. A303 shall be qualified as required by para. A304.7.2.

A304.5 Pressure Design of Nonmetallic Flanges

A304.5.1 General

(a) Flanges not in accordance with para. A303, or A304.5.1(b) or (d) shall be qualified as required by para. A304.7.2.

(b) Flanges for use with flat ring gaskets may be designed in accordance with the BPV Code, Section VIII, Division 1, Appendix 2, except that the allowable stresses and temperature limits of this Code shall govern. Nomenclature shall be as defined in the BPV Code, except for the following:

P = design gage pressure
S_a = bolt design stress at atmospheric temperature[4]
S_b = bolt design stress at design temperature[4]
S_f = allowable stress for flange material from Table B-1, B-2, or B-3

(c) The rules in (b) above are not applicable to a flanged joint having a gasket that extends outside the bolts (usually to the outside diameter of the flange).

(d) For flanges that make solid contact outside the bolts, Section VIII, Division 1, Appendix Y should be used.

A304.5.2 Blind Flanges. Blind flanges not in accordance with para. A303 may be designed in accordance with para. 304.5.2, except that allowable stress S shall be taken from Tables in Appendix B. Otherwise, they shall be qualified as required by para. A304.7.2.

A304.6 Reducers

Reducers not in accordance with para. A303 shall be qualified as required by para. A304.7.2.

[4] Bolt design stresses shall not exceed those in Table A-2.

A304.7 Pressure Design of Other Components

A304.7.1 Listed Components. Other pressure containing components, manufactured in accordance with standards in Table A326.1 but not covered elsewhere in para. A304, may be utilized in accordance with para. A303.

A304.7.2 Unlisted Components. Pressure design of unlisted components and joints, to which the rules elsewhere in para. A304 do not apply, shall be based on calculations consistent with the design criteria of this Code. Calculations shall be substantiated by one or both of the means stated in (a) and (b) below, considering applicable ambient and dynamic effects in paras. 301.4 through 301.11.

(a) extensive, successful service experience under comparable design conditions with similarly proportioned components made of the same or like material

(b) performance test under design conditions including applicable dynamic and creep effects, continued for a time period sufficient to determine the acceptability of the component or joint for its design life

For (a) or (b) above, the designer may interpolate between sizes, wall thicknesses, and pressure classes, and may determine analogies among related materials.

A304.7.3 Nonmetallic Components With Metallic Pressure Parts. Components not covered by standards in Table A326.1, in which both nonmetallic and metallic parts contain the pressure, shall be evaluated by applicable requirements of para. 304.7.2 as well as those of para. A304.7.2.

PART 3
FLUID SERVICE REQUIREMENTS FOR PIPING COMPONENTS

A305 PIPE

Listed pipe may be used in Normal Fluid Service, subject to the limitations of the pressure-containing material and para. A323.4. Unlisted pipe may be used only in accordance with para. A302.2.3.

A306 FITTINGS, BENDS, MITERS, LAPS, AND BRANCH CONNECTIONS

General. Fittings, bends, miters, laps, and branch connections may be used in accordance with paras. A306.1 through A306.5. Pipe and other materials used in such components shall be suitable for the manufacturing process and the fluid service.

A306.1 Pipe Fittings

A306.1.1 Listed Fittings. Listed fittings may be used in Normal Fluid Service subject to limitations on materials.

Copyright © 2015 by the American Society of Mechanical Engineers.
No reproduction may be made of this material without written consent of ASME.

A306.1.2 Unlisted Fittings. Unlisted fittings may be used only in accordance with para. A302.2.3.

A306.2 Pipe Bends

A306.2.1 General. A bend made in accordance with para. A332 and verified for pressure design in accordance with para. A304.2.1 shall be suitable for the same service as the pipe from which it is made.

A306.2.2 Corrugated and Other Bends. Bends of other designs (such as creased or corrugated) shall be qualified for pressure design as required by para. A304.7.2.

A306.3 Miter Bends

Except as specified in para. 306.3.2, a miter bend that conforms to para. A304.2.3 may be used in Normal Fluid Service.

A306.4 Fabricated or Flared Laps

The following requirements do not apply to fittings conforming to para. A306.1.

A306.4.1 Fabricated Laps

(a) The requirements in paras. 306.4.1(a) and (b) shall be met.

(b) Lap material shall be suitable for the service conditions. Pressure design shall be qualified as required by para. A304.7.2.

A306.4.2 Flared Laps. Flared laps shall not be used in nonmetallic piping.

A306.5 Fabricated Branch Connections

The following requirements do not apply to fittings conforming to para. A306.1.

A306.5.1 General. A fabricated branch connection made by bonding the branch pipe directly to the header pipe, with or without added reinforcement as stated in para. 328.5.4, and shown in Fig. 328.5.4, may be used in Normal Fluid Service, provided that pressure design is qualified as required by para. A304.7.2.

A306.5.2 Specific Requirements. Fabricated branch connections shall be made as specified in para. A328.5.

A307 VALVES AND SPECIALTY COMPONENTS

Paragraph 307 applies in its entirety, except that in para. 307.1.2 reference to paras. A302.2.3 and A304.7.2 replaces reference to paras. 302.2.3 and 304.7.2, respectively.

A308 FLANGES, BLANKS, FLANGE FACINGS, AND GASKETS

A308.1 General

Paragraph 308.1 applies, except that in para. 308.1.2 reference to para. A302.2.3 replaces reference to para. 302.2.3.

A308.2 Nonmetallic Flanges

A308.2.1 General

(a) Flanges shall be adequate, with suitable facing, gasketing, and bolting, to develop the full rating of the joint and to withstand expected external loadings.

(b) The designer should consult the manufacturer for ratings of flanges.

A308.2.2 Threaded Flanges. Threaded flanges are subject to the requirements for threaded joints in para. A314.

A308.3 Flange Facings

Paragraph 308.3 applies in its entirety.

A308.4 Limitations on Gaskets

See also Appendix F, para. F308.4.

A308.4.1 Lining Used as Facing or Gasket. Lining material extended over the flange face and used as a gasket shall conform to para. 308.4.

A309 BOLTING

Bolting includes bolts, bolt studs, studs, cap screws, nuts, and washers. See Appendix F, para. F309.

A309.1 General

Paragraph 309.1 applies in its entirety.

A309.2 Specific Bolting

Any bolting that meets the requirements of para. 309.1 may be used with any combination of flange materials and flange facings. Joint assembly shall conform to the requirements of para. A335.2.

A309.3 Tapped Holes in Nonmetallic Components

Tapped holes for pressure-retaining bolting in piping components may be used provided pressure design is qualified as required by para. A304.7.2.

PART 4
FLUID SERVICE REQUIREMENTS FOR PIPING JOINTS

A310 GENERAL

Paragraph 310 applies in its entirety.

A311 BONDED JOINTS IN PLASTICS

A311.1 General

Bonding shall be in accordance with para. A328 and examination shall be in accordance with para. A341.4.1 for use in Normal Fluid Service, subject to the limitations of the material.

Copyright © 2015 by the American Society of Mechanical Engineers.
No reproduction may be made of this material without written consent of ASME.

A311.2 Specific Requirements

A311.2.1 Fillet Bonds. A fillet bond may be used only in conjunction with a qualified hot gas welding procedure for bonding (see para. A328.5.2).

A311.2.2 Seal Bonds. A seal bond may be used only to prevent leakage of a threaded joint and only if it has been demonstrated that there will be no deleterious effect on the materials bonded.

A311.2.3 Joints Limited to Category D Fluid Service. Joints that have been examined in accordance with para. 341.4.2 may be used only for Category D Fluid Service.

A312 FLANGED JOINTS

The designer should consult the manufacturer for ratings of flanged joints in nonmetallic piping and in piping lined with nonmetals.

A313 EXPANDED JOINTS

Paragraph 313 applies in its entirety.

A314 THREADED JOINTS

A314.1 General

A threaded joint is suitable for use in Normal Fluid Service, subject to the limitations of the material and requirements elsewhere in para. A314. A joint conforming to para. 314.1(d) shall not be used.

A314.2 Specific Requirements

A314.2.1 Thermoplastic Piping

(a) Polyethylene (PE) pipe and tubing shall not be joined by threaded joints.

(b) Threaded joints in other thermoplastic piping shall conform to all of the following:

(1) The pipe wall shall be at least as thick as Schedule 80 as defined in ASTM D1785.

(2) Threads shall be NPT, and shall conform to ASME B1.20.1 or ASTM F1498.

(3) Threads shall conform to applicable standards in Table A326.1.

(4) A suitable thread sealant shall be used.

A314.2.2 Reinforced Thermosetting Resin Piping. Threaded joints in reinforced thermosetting resin (RTR) piping shall conform to the following:

(a) External threads shall be factory cut or molded on special thick-walled pipe ends.

(b) Matching internal threads shall be factory cut or molded in the fittings.

(c) Threading of plain ends of RTR pipe is not permitted, except where such threads are limited to the function of a mechanical lock to matching internal threads factory cut or molded in the bottom portions of fittings with deep sockets.

(d) Factory cut or molded threaded nipples, couplings, or adapters, bonded to plain-end RTR pipe and fittings, may be used where it is necessary to provide connections to threaded metallic piping.

A314.2.3 Reinforced Plastic Mortar Piping. Threaded joints are not permitted in reinforced plastic mortar (RPM) piping.

A315 TUBING JOINTS

Paragraph 315 applies in its entirety, subject to material limitations, exclusion of 315.2(b) regarding severe cyclic conditions, and replacement of reference to Table 326.1 and para. 304.7.2 with reference to Table A326.1 and para. A304.7.2, respectively.

A316 CAULKED JOINTS

Paragraph 316 applies in its entirety.

A318 SPECIAL JOINTS

Special joints are those not covered elsewhere in Chapter VII, Part 4, such as bell type and packed gland type joints.

A318.1 General

Paragraph 318.1 applies in its entirety, except that, in para. 318.1.2, reference to para. A304.7.2 replaces reference to para. 304.7.2.

A318.2 Specific Requirements

Paragraph 318.2 applies with the exception of para. 318.2.3.

A318.3 Piping Lined With Nonmetals

A318.3.1 Welding of Metallic Piping

(a) General. Joints made in accordance with the rules in para. A329.1 may be used in Normal Fluid Service, subject to material limitations.

(b) Specific Requirements. Welds shall be limited to those that do not affect the serviceability of the lining.

A318.3.2 Flared Linings

(a) General. Flared ends of linings made in accordance with the rules in para. A329.2 may be used in Normal Fluid Service, subject to material limitations.

(b) Specific Requirements. Flaring shall be limited to applications that do not affect the serviceability of the lining.

Copyright © 2015 by the American Society of Mechanical Engineers.
No reproduction may be made of this material without written consent of ASME.

A318.4 Flexible Elastomeric Sealed Joints

Flexible elastomeric seals conforming to the following may be used in Normal Fluid Service, subject to material limitations:

(a) Seals for joints in thermoplastic piping shall conform to ASTM D3139.

(b) Seals for joints in RTR and RPM piping shall conform to ASTM D4161.

PART 5
FLEXIBILITY AND SUPPORT

A319 FLEXIBILITY OF NONMETALLIC PIPING

A319.1 Requirements

A319.1.1 Basic Requirements. Piping systems shall be designed to prevent thermal expansion or contraction, pressure expansion, or movement of piping supports and terminals from causing

(a) failure of piping or supports from overstrain or fatigue

(b) leakage at joints

(c) detrimental stresses or distortion in piping or in connected equipment (pumps, for example), resulting from excessive thrusts and moments in the piping

A319.1.2 Specific Requirements

(a) In para. A319, guidance, concepts, and data are given to assist the designer in assuring adequate flexibility in piping systems. No specific stress-limiting criteria or methods of stress analysis are presented since stress–strain behavior of most nonmetals differs considerably from that of metals covered by para. 319 and is less well defined for mathematical analysis.

(b) Piping systems should be designed and laid out so that flexural stresses resulting from displacement due to expansion, contraction, and other movement are minimized. This concept requires special attention to supports, terminals, and other restraints, as well as to the techniques outlined in para. A319.7. See also para. A319.2.2(b).

(c) Further information on design of thermoplastic piping can be found in PPI Technical Report TR-21.

A319.2 Concepts

A319.2.1 Displacement Strains. The concepts of strain imposed by restraint of thermal expansion or contraction, and by external movement, described in para. 319.2.1, apply in principle to nonmetals. Nevertheless, the assumption that stresses throughout the piping system can be predicted from these strains because of fully elastic behavior of the piping materials is not generally valid.

(a) In thermoplastics and some RTR and RPM piping, displacement strains are not likely to produce immediate failure but may result in detrimental distortion. Especially in thermoplastic piping, progressive deformation may occur upon repeated thermal cycling or on prolonged exposure to elevated temperature.

(b) In brittle piping (such as porcelain, glass, etc.) and some RTR and RPM piping, the materials show rigid behavior and develop high displacement stresses up to the point of sudden breakage due to overstrain.

A319.2.2 Displacement Stresses

(a) Elastic Behavior. The assumption that displacement strains will produce proportional stress over a sufficiently wide range to justify an elastic stress analysis often is not valid for nonmetals. In brittle piping, strains initially will produce relatively large elastic stresses. The total displacement strain must be kept small, however, since overstrain results in failure rather than plastic deformation. In thermoplastic and thermosetting resin piping, strains generally will produce stresses of the overstrained (plastic) type, even at relatively low values of total displacement strain. If a method of flexibility analysis that assumes elastic behavior is selected, the designer must be able to demonstrate its validity for the piping system under consideration, and shall establish safe limits for computed stresses.

(b) Overstrained Behavior. Stresses cannot be considered proportional to displacement strains throughout a piping system in which an excessive amount of strain may occur in localized portions of the piping [an unbalanced system; see para. 319.2.2(b)] or in which elastic behavior of the piping material cannot be assumed. Overstrain shall be minimized by system layout and excessive displacements shall be minimized by special joints or expansion devices (see para. A319.7).

A319.2.3 Cold Spring. Cold spring is the intentional deformation of piping during assembly to produce a desired initial displacement or reaction. Cold spring may be beneficial in serving to balance the magnitude of the reaction under initial and extreme displacement conditions. When cold spring is properly applied, there is less likelihood of overstrain during initial operation. There is also less deviation from as-installed dimensions during initial operation, so that hangers will not be displaced as far from their original settings. No credit for cold spring is permitted in stress range calculations, or in calculating thrusts and moments. (14)

A319.3 Properties for Flexibility Analysis

A319.3.1 Thermal Expansion Data. Appendix C lists coefficients of thermal expansion for several nonmetals. More precise values in some instances may be obtainable from manufacturers of components. If these values are to be used in stress analysis, the thermal displacements shall be determined as stated in para. 319.3.1.

A319.3.2 Modulus of Elasticity. Appendix C lists representative data on the tensile modulus of elasticity, E, for several nonmetals as obtained under typical laboratory rate of strain (loading) conditions. Because of

Copyright © 2015 by the American Society of Mechanical Engineers.
No reproduction may be made of this material without written consent of ASME.

their viscoelasticity, the effective moduli of plastics under actual conditions of use will depend on both the specific course of the strain (or load) with time and the specific characteristics of the plastic. More precise values of the short term and working estimates of effective moduli of elasticity for given conditions of loading and temperature may be obtainable from the manufacturer. The modulus may also vary with the orientation of the specimen, especially for resins with filament-wound reinforcement. For materials and temperatures not listed, refer to ASTM or PPI documents, or to manufacturer's data.

A319.3.3 Poisson's Ratio. Poisson's ratio varies widely depending upon material and temperature. For that reason simplified formulas used in stress analysis for metals may not be valid for nonmetals.

A319.3.4 Dimensions. Nominal thicknesses and outside diameters of pipe and fittings shall be used in flexibility calculations.

A319.4 Analysis

A319.4.1 Formal Analysis Not Required. No formal analysis is required for a piping system that

(a) duplicates, or replaces without significant change, a system operating with a successful service record

(b) can readily be judged adequate by comparison with previously analyzed systems, or

(c) is laid out with a conservative margin of inherent flexibility, or employs joining methods or expansion joint devices, or a combination of these methods, in accordance with manufacturers' instructions

A319.4.2 Formal Analysis Requirements. For a piping system that does not meet the above criteria, the designer shall demonstrate adequate flexibility by simplified, approximate, or comprehensive stress analysis, using a method that can be shown to be valid for the specific case. If substantially elastic behavior can be demonstrated for the piping system [see para. A319.2.2(a)], methods outlined in para. 319.4 may be applicable.

A319.5 Reactions

Paragraph 319.5 may be applicable if a formal stress analysis can be shown to be valid for the specific case.

A319.6 Movements

Special attention shall be given to movement (displacement or rotation) of piping with respect to supports and points of close clearance. Movements of the run pipe at the junction of a small branch connection shall be considered in determining the need for flexibility in the branch pipe.

A319.7 Means of Increasing Flexibility

Piping layout often provides adequate inherent flexibility through changes in direction, wherein displacements produce chiefly bending and torsional strains of low magnitude. The amount of tension or compression strain (which can produce larger reactions) usually is small.

Where piping lacks inherent flexibility or is unbalanced, additional flexibility shall be provided by one or more of the following means: bends, loops, or offsets; swivel or flexible joints; corrugated, bellows, or slip-joint expansion joints; or other devices permitting angular, rotational, or axial movement. Suitable anchors, ties, or other devices shall be provided as necessary to resist end forces produced by fluid pressure, frictional resistance to movement, and other causes.

A321 PIPING SUPPORT

Paragraph 321 applies in its entirety.

A321.5 Supports for Nonmetallic Piping

A321.5.1 General. In addition to other applicable requirements of para. 321, supports, guides, and anchors shall be selected and applied to comply with the principles and requirements of para. A319 and the following:

(a) Piping shall be supported, guided, and anchored in such a manner as to prevent damage to the piping. Point loads and narrow areas of contact between piping and supports shall be avoided. Suitable padding shall be placed between piping and supports where damage to piping may occur.

(b) Valves and equipment that would transmit excessive loads to the piping shall be independently supported to prevent such loads.

(c) Consideration shall be given to mechanical guarding in traffic areas.

(d) Manufacturers' recommendations for support shall be considered.

A321.5.2 Supports for Thermoplastic, RTR, and RPM Piping. Supports shall be spaced to avoid excessive sag or deformation at the design temperature and within the design life of the piping system. Decreases in the modulus of elasticity with increasing temperature and creep of material with time shall be considered when applicable. The coefficient of thermal expansion shall be considered in the design and location of supports.

A321.5.3 Supports for Brittle Piping. Brittle piping, such as glass, shall be well supported but free of hindrance to expansion or other movement. Not more than one anchor shall be provided in any straight run without an expansion joint.

PART 6
SYSTEMS

A322 SPECIFIC PIPING SYSTEMS

A322.3 Instrument Piping

Paragraph 322.3 applies in its entirety, except that references to paras. A301 and A302.2.4 replace references to paras. 301 and 302.2.4, respectively.

Copyright © 2015 by the American Society of Mechanical Engineers.
No reproduction may be made of this material without written consent of ASME.

A322.6 Pressure-Relieving Systems

Paragraph 322.6 applies in its entirety, except for para. 322.6.3. See para. A322.6.3.

A322.6.3 Overpressure Protection. Paragraph 322.6.3 applies, except that maximum relieving pressure shall be in accordance with para. A302.2.4.

PART 7
MATERIALS

A323 GENERAL REQUIREMENTS

A323.1 Materials and Specifications

Paragraph 323.1 applies except for para. 323.1.4. See para. A323.1.4.

A323.1.4 Reclaimed Materials. Reclaimed piping components may be used, provided they are properly identified as conforming to a listed or published specification (see para. 323.1.1) and otherwise meet the requirements of this Code. The user shall verify that components are suitable for the intended service. Sufficient cleaning, examination, and testing shall be performed to determine the minimum available wall thickness and freedom from any of the following to an extent that would be unacceptable in the intended service:

(a) imperfections

(b) reduction of mechanical properties, or

(c) absorption of deleterious substances

A323.2 Temperature Limitations

The designer shall verify that materials that meet other requirements of the Code are suitable for service throughout the operating temperature range. Also see the Notes for Tables B-1 through B-5 in Appendix B.

A323.2.1 Upper Temperature Limits, Listed Materials

(a) Except as provided in (b) below, a listed material shall not be used at a design temperature higher than the maximum for which a stress value or rating is shown, or higher than the maximum recommended temperature in Table A323.4.2C for RTR materials and in Table A323.4.3 for thermoplastics used as linings.

(b) A listed material may be used at a temperature higher than the maximum stated in (a) above if there is no prohibition in Appendix B or elsewhere in the Code, and if the designer verifies the serviceability of the material in accordance with para. 323.2.4.

A323.2.2 Lower Temperature Limits, Listed Materials

(a) Materials for use at design minimum temperatures below certain limits must usually be tested to determine that they have suitable toughness for use in Code piping. Table A323.2.2 sets forth those requirements.

(b) When materials are qualified for use at temperatures below the minimum temperature listed in Appendix B, the allowable stresses or pressures shall not exceed the values for the lowest temperatures shown.

(c) See also the recommended limits in Table A323.4.2C for reinforced thermosetting resin pipe and in Table A323.4.3 for thermoplastics used as linings.

A323.2.3 Temperature Limits, Unlisted Materials. Paragraph 323.2.3 applies.

A323.2.4 Verification of Serviceability. When an unlisted material is to be used, or when a listed material is to be used above or below the limits in Appendix B or Table A323.4.2C or Table A323.4.3, the designer shall comply with the requirements of para. 323.2.4.

A323.4 Fluid Service Requirements for Nonmetallic Materials

A323.4.1 General

(a) Nonmetallic materials shall be safeguarded against excessive temperature, shock, vibration, pulsation, and mechanical abuse in all fluid services.

(b) Requirements in para. A323.4 apply to pressure-containing parts. They do not apply to materials used for supports, gaskets, or packing. See also Appendix F, para. FA323.4.

A323.4.2 Specific Requirements

(a) Thermoplastics

(1) They shall not be used in flammable fluid service above ground, unless all of the following are met:

(a) The size of the piping does not exceed DN 25 (NPS 1).

(b) Owner's approval is obtained.

(c) Safeguarding in accordance with Appendix G is provided.

(d) The precautions of Appendix F, paras. F323.1(a) through (c) are considered.

(2) They shall be safeguarded when used in other than Category D Fluid Service.

(3) PVC and CPVC shall not be used in compressed air or other compressed gas service.

(b) Reinforced Plastic Mortars (RPM) Piping. This piping shall be safeguarded when used in other than Category D Fluid Service.

(c) Reinforced Thermosetting Resins (RTR) Piping. This piping shall be safeguarded when used in toxic or flammable fluid services. Table A323.4.2C gives the recommended temperature limits for reinforced thermosetting resins.

(d) Borosilicate Glass and Porcelain

(1) They shall be safeguarded when used in toxic or flammable fluid services.

(2) They shall be safeguarded against large, rapid temperature changes in fluid services.

Copyright © 2015 by the American Society of Mechanical Engineers.
No reproduction may be made of this material without written consent of ASME.

Table A323.2.2 Requirements for Low Temperature Toughness Tests for Nonmetals

Type of Material	Column A At or Above Listed Minimum Temperature	Column B Below Listed Minimum Temperature
Listed nonmetallic materials	No added requirement	The designer shall have test results at or below the lowest expected service temperature, which assure that the materials and bonds will have adequate toughness and are suitable at the design minimum temperature.
Unlisted materials	An unlisted material shall conform to a published specification. Where composition, properties, and product form are comparable to those of a listed material, requirements for the corresponding listed material shall be met. Other unlisted materials shall be qualified as required in Column B.	

GENERAL NOTE: These requirements are in addition to the requirements of the material specification.

Table A323.4.2C Recommended Temperature Limits for Reinforced Thermosetting Resin Pipe

Materials		Recommended Temperature Limits			
		Minimum		Maximum	
Resin	Reinforcing	°C	°F	°C	°F
Epoxy	Glass fiber	−29	−20	149	300
Phenolic	Glass fiber	−29	−20	149	300
Furan	Carbon	−29	−20	93	200
Furan	Glass fiber	−29	−20	93	200
Polyester	Glass fiber	−29	−20	93	200
Vinyl ester	Glass fiber	−29	−20	93	200

GENERAL NOTE: These temperature limits apply only to materials listed and do not reflect evidence of successful use in specific fluid services at these temperatures. The designer should consult the manufacturer for specific applications, particularly as the temperature limits are approached.

Copyright © 2015 by the American Society of Mechanical Engineers.
No reproduction may be made of this material without written consent of ASME.

Table A323.4.3 Recommended Temperature Limits for Thermoplastics Used as Linings

Materials [Note (1)]	Minimum °C	Minimum °F	Maximum °C	Maximum °F
PFA	−198	−325	260	500
PTFE	−198	−325	260	500
FEP	−198	−325	204	400
ECTFE	−198	−325	171	340
ETFE	−198	−325	149	300
PVDF	−18	0	135	275
PP	−18	0	107	225
PVDC	−18	0	79	175

GENERAL NOTE: These temperature limits are based on material tests and do not necessarily reflect evidence of successful use as piping component linings in specific fluid services at these temperatures. The designer should consult the manufacturer for specific applications, particularly as temperature limits are approached.

NOTE:

(1) See para. A326.4 for definitions of materials.

A323.4.3 Piping Lined With Nonmetals

(a) Metallic Piping Lined With Nonmetals. Fluid service requirements for the base (outer) material in para. 323.4 govern except as stated in (d) below.

(b) Nonmetallic Piping Lined With Nonmetals. Fluid service requirements for the base (outer) material in para. A323.4.2 govern, except as stated in (d) below.

(c) Nonmetallic Lining Materials. The lining may be any material that, in the judgment of the user, is suitable for the intended service and for the method of manufacture and assembly of the piping. Fluid service requirements in para. A323.4.2 do not apply to materials used as linings.

(d) Properties of both the base and lining materials, and of any bond between them, shall be considered in establishing temperature limitations. Table A323.4.3 gives recommended temperature limits for thermoplastic materials used as linings.

A323.5 Deterioration of Materials in Service

Paragraph 323.5 applies in its entirety.

A325 MATERIALS — MISCELLANEOUS

Paragraph 325 applies in its entirety.

PART 8
STANDARDS FOR PIPING COMPONENTS

A326 DIMENSIONS AND RATINGS OF COMPONENTS

A326.1 Requirements

Paragraph 326 applies in its entirety except that references to Table A326.1 and Appendix B replace references to Table 326.1 and Appendix A, respectively.

A326.4 Abbreviations in Table A326.1 and Appendix B

The abbreviations tabulated below are used in this Chapter to replace lengthy phrases in the text, in the titles of standards in Table A326.1, and in the Specification Index for Appendix B. Those marked with an asterisk (*) are in accordance with ASTM D1600, Standard Terminology for Abbreviated Terms Relating to Plastics. Those items marked with a dagger (†) are in accordance with ASTM F412, Standard Terminology Relating to Plastic Piping Systems.

Abbreviation	Term
ABS*†	Acrylonitrile-butadiene-styrene plastics
BPS	Bonding Procedure Specification
CPVC*†	Chlorinated poly(vinyl chloride) plastics
DR†	Dimension ratio
DS	Design stress
E-CTFE*	Ethylene-chlorotrifluoroethylene
ETFE*	Ethylene-tetrafluoroethylene copolymer
FEP*	Perfluoro (ethylene-propylene) copolymer
HDBS	Hydrostatic Design Basis Stress
HDS†	Hydrostatic Design Stress
PB*†	Polybutylene-1
PE*†	Polyethylene
PFA*	Perfluoro (alkoxyalkane)
PP*†	Polypropylene
PQR	Procedure Qualification Record
PR†	Pressure rating
PTFE*	Polytetrafluoroethylene
PVC*†	Poly(vinyl chloride)
PVDC*	Poly(vinylidene chloride)
PVDF*	Poly(vinylidene fluoride)
RPM	Reinforced plastic mortar
RTP	Reinforced thermosetting plastic
RTR	Reinforced thermosetting resin
SDR†	Standard dimension ratios
SIDR†	Standard inside diameter dimension ratio
WPS	Welding Procedure Specification

Copyright © 2015 by the American Society of Mechanical Engineers.
No reproduction may be made of this material without written consent of ASME.

Table A326.1 Component Standards

Standard or Specification	Designation
Nonmetallic Fittings, Valves, and Flanges	
Process Glass Pipe and Fittings	ASTM C599
Threaded PVC Plastic Pipe Fittings, Sch 80	ASTM D2464
PVC Plastic Pipe Fittings, Sch 40	ASTM D2466
PVC Plastic Pipe Fittings, Sch 80	ASTM D2467
Socket-Type ABS Plastic Pipe Fittings, Sch 40	ASTM D2468
Thermoplastic Gas Pressure Pipe, Tubing, and Fittings	ASTM D2513
Reinforced Epoxy Resin Gas Pressure Pipe and Fittings	ASTM D2517
Plastic Insert Fittings for PE Plastic Pipe	ASTM D2609
Socket-Type PE Fittings for Outside Diameter-Controlled PE Pipe and Tubing	ASTM D2683
CPVC Plastic Hot- and Cold-Water Distribution Systems	ASTM D2846/D2846M
Butt Heat Fusion PE Plastic Fittings for PE Plastic Pipe and Tubing	ASTM D3261
PB Plastic Hot- and Cold-Water Distribution Systems	ASTM D3309
Fiberglass RTR Pipe Fittings for Nonpressure Applications [Note (1)]	ASTM D3840
Machine Made "Fiberglass" (Glass-Fiber-Reinforced Thermosetting Resin) Flanges	ASTM D4024
Contact Molded Fiberglass RTR Flanges [Note (1)]	ASTM D5421
Fiberglass Pressure Pipe Fittings	ASTM D5685
PTFE Plastic-Lined Ferrous Metal Pipe and Fittings [Notes (2) and (3)]	ASTM F423
Threaded CPVC Plastic Pipe Fittings, Sch 80	ASTM F437
Socket-Type CPVC Plastic Pipe Fittings, Sch 40	ASTM F438
CPVC Plastic Pipe Fittings, Schedule 80	ASTM F439
PVDF Plastic-Lined Ferrous Metal Pipe and Fittings [Notes (2) and (3)]	ASTM F491
Propylene and PP Plastic-Lined Ferrous Metal Pipe and Fittings [Notes (2) and (3)]	ASTM F492
FEP Plastic-Lined Ferrous Metal Pipe and Fittings [Notes (2) and (3)]	ASTM F546
PVDC Plastic-Lined Ferrous Metal Pipe and Fittings [Notes (2) and (3)]	ASTM F599
PFA Plastic-Lined Ferrous Metal Pipe and Fittings [Notes (2) and (3)]	ASTM F781
Electrofusion Type PE Fittings for Outside Diameter Controlled PE Pipe and Tubing	ASTM F1055
Plastic-Lined Ferrous Metal Pipe, Fittings, and Flanges [Notes (2) and (3)]	ASTM F1545
Pressure-Rated Polypropylene (PP) Piping Systems	ASTM F2389
Plastic Industrial Ball Valves [Notes (2) and (3)]	MSS SP-122
Nonmetallic Pipes and Tubes	
PE Line Pipe	API 15LE
Low Pressure Fiberglass Line Pipe	API 15LR
Reinforced Concrete Low-Head Pressure Pipe	ASTM C361
Process Glass Pipe and Fittings	ASTM C599
ABS Plastic Pipe, Sch 40 and 80	ASTM D1527
PVC Plastic Pipe, Sch 40, 80 and 120	ASTM D1785
PE Plastic Pipe (SIDR-PR) Based on Controlled Inside Diameter	ASTM D2239
PVC Plastic Pressure-Rated Pipe (SDR Series)	ASTM D2241
ABS Plastic Pipe (SDR-PR)	ASTM D2282
Classification for Machine-Made RTR Pipe	ASTM D2310
PE Plastic Pipe, Sch 40 & 80, Based on Outside Diameter	ASTM D2447
Thermoplastic Gas Pressure Pipe, Tubing, and Fittings	ASTM D2513
Reinforced Epoxy Resin Gas Pressure Pipe and Fittings	ASTM D2517
PB Plastic Pipe (SDR-PR)	ASTM D2662
PB Plastic Tubing	ASTM D2666
Joints for IPS PVC Pipe Using Solvent Cement	ASTM D2672

Copyright © 2015 by the American Society of Mechanical Engineers.
No reproduction may be made of this material without written consent of ASME.

(14)

Table A326.1 Component Standards (Cont'd)

Standard or Specification	Designation
Nonmetallic Pipes and Tubes (Cont'd)	
PE Plastic Tubing	ASTM D2737
CPVC Plastic Hot- and Cold-Water Distribution System	ASTM D2846/D2846M
Filament-Wound Fiberglass RTR Pipe [Note (1)]	ASTM D2996
Centrifugally Cast Fiberglass RTR Pipe	ASTM D2997
PB Plastic Pipe (SDR-PR) Based on Outside Diameter	ASTM D3000
PE Plastic Pipe (DR-PR) Based on Controlled Outside Diameter	ASTM D3035
PB Plastic Hot- and Cold-Water Distribution Systems	ASTM D3309
Fiberglass RTR Pressure Pipe [Note (1)]	ASTM D3517
Fiberglass RTR Sewer and Industrial Pressure Pipe [Note (1)]	ASTM D3754
CPVC Plastic Pipe, Sch 40 and 80	ASTM F441/F441M
CPVC Plastic Pipe (SDR-PR)	ASTM F442/F442M
Crosslinked Polyethylene/Aluminum/Crosslinked Polyethylene (PEX-AL-PEX) Pressure Pipe	ASTM F1281
Polyethylene/Aluminum/Polyethylene (PE-AL-PE) Composite Pressure Pipe	ASTM F1282
Polyolefin Pipe and Fittings for Corrosive Waste Drainage Systems [Notes (2) and (3)]	ASTM F1412
Plastic-Lined Ferrous Metal Pipe, Fittings, and Flanges [Notes (2) and (3)]	ASTM F1545
PVDF Corrosive Waste Drainage Systems	ASTM F1673
Pressure-Rated Polypropylene (PP) Piping Systems	ASTM F2389
Reinforced Concrete Pressure Pipe, Steel Cylinder Type, for Water and Other Liquids	AWWA C300
Prestressed Concrete Pressure Pipe, Steel Cylinder Type, for Water and Other Liquids	AWWA C301
Reinforced Concrete Pressure Pipe, Noncylinder Type	AWWA C302
PVC Pressure Pipe, 4-inch through 12-inch, for Water	AWWA C900
Fiberglass Pressure Pipe	AWWA C950
Miscellaneous	
Contact-Molded RTP Laminates for Corrosion Resistant Equipment	ASTM C582
Threads for Fiberglass RTR Pipe (60 deg stub) [Note (1)]	ASTM D1694
Solvent Cements for ABS Plastic Pipe and Fittings	ASTM D2235
Solvent Cements for PVC Plastic Piping Systems	ASTM D2564
Joints for Plastic Pressure Pipes Using Flexible Elastomeric Seals	ASTM D3139
Fiberglass RTR Pipe Joints Using Flexible Elastomeric Seals [Note (1)]	ASTM D4161
Design and Construction of Nonmetallic Enveloped Gaskets for Corrosive Service	ASTM F336
Solvent Cements for CPVC Plastic Pipe and Fittings	ASTM F493
Taper Pipe Threads 60° for Thermoplastic Pipe and Fittings	ASTM F1498
Metal Insert Fittings for Polyethylene/Aluminum/Polyethylene and Crosslinked Polyethylene/Aluminum/ Crosslinked Polyethylene Composite Pressure Pipe	ASTM F1974

GENERAL NOTE: It is not practical to refer to a specific edition of each standard throughout the Code text. Instead, the approved edition references, along with the names and addresses of the sponsoring organizations, are shown in Appendix E.

NOTES:

(1) The term *fiberglass RTR* takes the place of the ASTM designation *fiberglass* (*glass-fiber-reinforced thermosetting resin*).

(2) This Standard allows the use of unlisted materials; see para. 323.1.2.

(3) This Standard contains no pressure–temperature ratings.

Copyright © 2015 by the American Society of Mechanical Engineers.
No reproduction may be made of this material without written consent of ASME.

PART 9
FABRICATION, ASSEMBLY, AND ERECTION

A327 GENERAL

Piping materials and components are prepared for assembly and erection by one or more of the fabrication processes in paras. A328, A329, A332, and A334. When any of these processes is used in assembly and erection, requirements are the same as for fabrication.

A328 BONDING OF PLASTICS

Paragraph A328 applies only to joints in thermoplastic, RTR, and RPM piping. Bonding shall conform to paras. A328.1 through A328.7 and the applicable requirements of para. A311.

A328.1 Bonding Responsibility

Each employer is responsible for the bonding done by personnel of his organization and, except as provided in paras. A328.2.2 and A328.2.3, shall conduct the required performance qualification tests to qualify bonding procedure specifications (BPS) and bonders or bonding operators.

A328.2 Bonding Qualifications

A328.2.1 Qualification Requirements

(a) Qualification of the BPS to be used, and of the performance of bonders and bonding operators, is required. To qualify a BPS, all tests and examinations specified therein and in para. A328.2.5 shall be completed successfully.

(b) In addition to the procedure for making the bonds, the BPS shall specify at least the following:

(1) all materials and supplies (including storage requirements)

(2) tools and fixtures (including proper care and handling)

(3) environmental requirements (e.g., temperature, humidity, and methods of measurement)

(4) joint preparation

(5) dimensional requirements and tolerances

(6) cure time

(7) protection of work

(8) tests and examinations other than those required by para. A328.2.5

(9) acceptance criteria for the completed test assembly

A328.2.2 Procedure Qualification by Others. Subject to the specific approval of the Inspector, a BPS qualified by others may be used provided that

(a) the Inspector satisfies him/herself that the proposed qualified BPS has been prepared and executed by a responsible recognized organization with expertise in the field of bonding

(b) by signature, the employer accepts both the BPS and procedure qualification record (PQR) as his own

(c) the employer has at least one currently employed bonder who, while in his employ, has satisfactorily passed a performance qualification test using the proposed qualified BPS

A328.2.3 Performance Qualification by Others. Without the Inspector's specific approval, an employer shall not accept a performance qualification test made by a bonder or bonding operator for another employer. If approval is given, it is limited to work on piping using the same or equivalent BPS. An employer accepting such performance qualification tests shall obtain a copy of the performance qualification test record from the previous employer showing the name of the employer by whom the bonder or bonding operator was qualified, the date of such qualification, and the date the bonder or bonding operator last bonded pressure piping under such performance qualification.

A328.2.4 Qualification Records. The employer shall maintain a self-certified record, available to the owner or owner's agent and to the Inspector, of the BPS used and the bonders or bonding operators employed by him/her, and showing the dates and results of BPS qualifications and bonding performance qualifications.

A328.2.5 Qualification Tests. Tests, as specified in para. A328.2.1(a), shall be performed to qualify each BPS and the performance of each bonder and bonding operator. Test assemblies shall conform to (a) below and the test method shall be in accordance with either (b) or (c).

(a) Test Assembly. The assembly shall be fabricated in one pipe size in accordance with the BPS and shall contain at least one of each different type of joint identified in the BPS. More than one test assembly may be prepared if necessary to accommodate all of the joint types or to assure that at least one of each joint type is loaded in both circumferential and longitudinal directions. The size of pipe and fittings in the assembly shall be as follows:

(1) When the largest size to be qualified is DN 100 (NPS 4) or smaller, the test assembly shall be the largest size qualified.

(2) When the largest size to be qualified is greater than DN 100 (NPS 4), the size of the test assembly shall be between 25% and 100% of the largest piping size qualified, but shall be a minimum of DN 100 (NPS 4).

(b) Burst Test Method. The test assembly shall be subjected to a burst test in accordance with the applicable

Copyright © 2015 by the American Society of Mechanical Engineers.
No reproduction may be made of this material without written consent of ASME.

sections of ASTM D1599.[5] The time to burst in this standard may be extended. The test is successful if failure initiates outside of any bonded joint.

(c) Hydrostatic Test Method. The test assembly shall be subjected to hydrostatic pressure of at least P_T for not less than 1 hr with no leakage or separation of joints.

(1) For thermoplastics, P_T shall be determined in accordance with eq. (27)

$$P_T = 0.80\overline{T}\left(\frac{S_S + S_H}{D - \overline{T}}\right) \tag{27}$$

where

D = outside diameter of pipe

S_H = mean long term hydrostatic strength (LTHS) in accordance with ASTM D2837. Use twice the 23°C (73°F) HDB design stress from Table B-1 if listed, or use manufacturer's data.

S_S = mean short term burst stress in accordance with ASTM D1599,[5] from Table B-1 if listed, otherwise from manufacturer's data

$\overline{T}$ = nominal thickness of pipe

(2) For RTR (laminated and filament-wound) and RPM, P_T shall be three times the manufacturer's allowable pressure for the components being joined.

(3) The test shall be conducted so that the joint is loaded in both the circumferential and longitudinal directions.

A328.2.6 Performance Requalification. Renewal of a bonding performance qualification is required when

(a) a bonder or bonding operator has not used the specific bonding process for a period of 6 mo or more, or

(b) there is specific reason to question the individual's ability to make bonds that meet the BPS

A328.3 Bonding Materials and Equipment

A328.3.1 Materials. Bonding materials that have deteriorated by exposure to air or prolonged storage, or will not spread smoothly, shall not be used in making joints.

A328.3.2 Equipment. Fixtures and tools used in making joints shall be in such condition as to perform their functions satisfactorily.

A328.4 Preparation for Bonding

Preparation shall be defined in the BPS and shall specify such requirements as

(a) cutting

(b) cleaning

(c) preheat

(d) end preparation

(e) fit-up

A328.5 Bonding Requirements

A328.5.1 General

(a) Production joints shall be made only in accordance with a written bonding procedure specification (BPS) that has been qualified in accordance with para. A328.2. Manufacturers of piping materials, bonding materials, and bonding equipment should be consulted in the preparation of the BPS.

(b) Production joints shall be made only by qualified bonders or bonding operators who have appropriate training or experience in the use of the applicable BPS and have satisfactorily passed a performance qualification test that was performed in accordance with a qualified BPS.

(c) Each qualified bonder and bonding operator shall be assigned an identification symbol. Unless otherwise specified in the engineering design, each pressure-containing bond or adjacent area shall be stenciled or otherwise suitably marked with the identification symbol of the bonder or bonding operator. Identification stamping shall not be used and any marking paint or ink shall not be detrimental to the piping material. In lieu of marking the bond, appropriate records may be filed.

(d) Qualification in one BPS does not qualify a bonder or bonding operator for any other bonding procedure.

(e) Longitudinal joints are not covered in para. A328.

A328.5.2 Hot Gas Welded Joints in Thermoplastic Piping [5]

(a) Preparation. Surfaces to be hot gas welded together shall be cleaned of any foreign material. For butt welds, the joining edges should be beveled at 20 deg to 40 deg with 1 mm (1/32 in.) root face and root gap.

(b) Procedure. Joints shall be made in accordance with the qualified BPS.

(c) Branch Connections. A fabricated branch connection shall be made by inserting the branch pipe in the hole in the run pipe. Dimensions of the joint shall conform to Fig. 328.4.4 sketch (c). The hole in the run pipe shall be beveled at 45 deg. Alternatively, a fabricated branch connection shall be made using a manufactured full reinforcement saddle with integral socket.

A328.5.3 Solvent Cemented Joints in Thermoplastic Piping [5]

(a) Preparation. Thermoplastic pipe and fitting surfaces shall be prepared in accordance with ASTM D2855 for PVC, ASTM F493 for CPVC, and ASTM D2235 for ABS. A dry fit test of each joint is required before solvent cementing. The pipe shall enter the fitting socket between one-third and two-thirds of the full socket depth when assembled by hand.

[5] Titles of referenced standards and specifications are listed in Table A326.1, except ASTM D1599, Test Method for Resistance to Short-Time Hydraulic Pressure of Plastic Pipe, Tubing, and Fittings; ASTM D2657, Practice for Heat Fusion Joining of Polyolefin Pipe and Fittings; ASTM D2855, Practice for Making Solvent-Cemented Joints with PVC Pipe and Fittings; and ASTM F1290, Practice for Electrofusion Joining Polyolefin Pipe and Fittings.

Copyright © 2015 by the American Society of Mechanical Engineers.
No reproduction may be made of this material without written consent of ASME.

(b) Procedure. Joints shall be made in accordance with the qualified BPS. ASTM D2855 provides a suitable basis for development of such a procedure. Solvent cements for PVC, CPVC, and ABS shall conform to ASTM D2564, D2846, and D2235, respectively. Application of cement to both surfaces to be joined and assembly of these surfaces shall produce a continuous bond between them with visual evidence of cement at least flush with the outer end of the fitting bore around the entire joint perimeter. See Fig. A328.5.3.

(c) Branch Connections. A fabricated branch connection shall be made using a manufactured full reinforcement saddle with integral branch socket. The reinforcement saddle shall be solvent cemented to the run pipe over its entire contact surface.

A328.5.4 Heat Fusion Joints in Thermoplastic Piping [5]

(a) Preparation. Surfaces to be heat fused together shall be cleaned of all foreign material.

(b) Procedure. Joints shall be made in accordance with the qualified BPS. The general procedures in ASTM D2657, Techniques I — Socket Fusion, II — Butt Fusion, and III — Saddle Fusion, provide a suitable basis for development of such a procedure. Uniform heating of both surfaces to be joined and assembly of these surfaces shall produce a continuous homogeneous bond between them and shall produce a small fillet of fused material at the outer limits of the joint. See Fig. A328.5.4 for typical heat fusion joints. Fixtures shall be used to align components when joints are made.

(c) Branch Connections. A fabricated branch connection is permitted only where molded fittings are unavailable.

A328.5.5 Electrofusion Joints in Thermoplastic Piping [5]

(a) Preparation. Surfaces to be heat fused together shall be cleaned of all foreign material.

(b) Procedure. Joints shall be made in accordance with the qualified BPS. The general procedures in ASTM F1290, Technique I — Coupling Procedure and Technique II — Saddle Procedure provide a suitable basis for the development of such a procedure. See Fig. A328.5.5.

A328.5.6 Adhesive Joints in RTR and RPM Piping

(a) Procedure. Joints shall be made in accordance with the qualified BPS. Application of adhesive to the surfaces to be joined and assembly of these surfaces shall produce a continuous bond between them and shall seal over all cuts to protect the reinforcement from the service fluid. See Fig. A328.5.6.

(b) Branch Connections. A fabricated branch connection shall be made using a manufactured full reinforcement saddle having a socket or integral length of branch pipe suitable for a nozzle or coupling. The hole in the run pipe shall be made with a hole saw; the cut edges of the hole shall be sealed with adhesive at the time the saddle is bonded to the run pipe.

A328.5.7 Butt-and-Wrapped Joints in RTR and RPM Piping [5]

(a) Procedure. Joints shall be made in accordance with the qualified BPS. Application of plies of reinforcement saturated with catalyzed resin to the surfaces to be joined shall produce a continuous structure with them. Cuts shall be sealed to protect the reinforcement from the service fluid. See Fig. A328.5.7.

(b) Branch Connections. For a fabricated branch connection made by inserting the branch pipe into a hole in the run pipe, the hole shall be made with a hole saw.

A328.6 Bonding Repair

Defective material, joints, and other workmanship that fails to meet the requirements of this Code and of the engineering design shall be repaired or replaced. See also para. 341.3.3.

A328.7 Seal Bonds

If threaded joints are to be seal bonded in accordance with para. A311.2.2, the work shall be done by qualified bonders and all exposed threads shall be covered by the seal bond.

A329 FABRICATION OF PIPING LINED WITH NONMETALS

A329.1 Welding of Metallic Piping

A329.1.1 General

(a) Paragraph A329.1 applies only to welding subassemblies of metallic piping that have previously been lined with nonmetals.

(b) Welding that conforms to para. A329.1 may be used in accordance with para. A318.3.1.

A329.1.2 Specific Welding Requirements. Welding shall conform to the requirements of para. 328 and the following additional requirements:

(a) Modifications made in preparation for welding to suit manufacturer's recommendations shall be specified in the engineering design.

(b) Welding shall be performed so as to maintain the continuity of the lining and its serviceability.

(c) If a lining has been damaged, it shall be repaired or replaced.

(d) Qualification to one WPS for a specific lining material does not qualify a welder or welding operator for any other welding procedure involving different lining materials.

A329.2 Flaring of Nonmetallic Linings

A329.2.1 General

(a) Paragraph A329.2 applies only to the flaring of linings in pipe that has previously been lined with nonmetals.

Copyright © 2015 by the American Society of Mechanical Engineers.
No reproduction may be made of this material without written consent of ASME.

Fig. A328.5 Typical Plastic Piping Joints

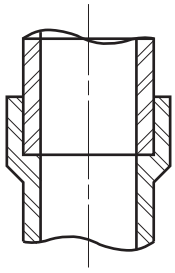

Socket Joint

FIG. A328.5.3 THERMOPLASTIC SOLVENT CEMENTED JOINT

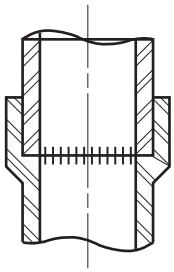

Socket Joint

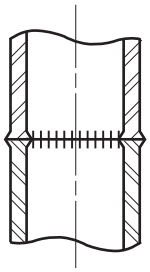

Butt Joint

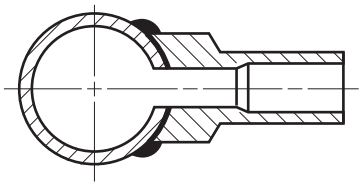

Saddle Joint

FIG. A328.5.4 THERMOPLASTIC HEAT FUSION JOINTS

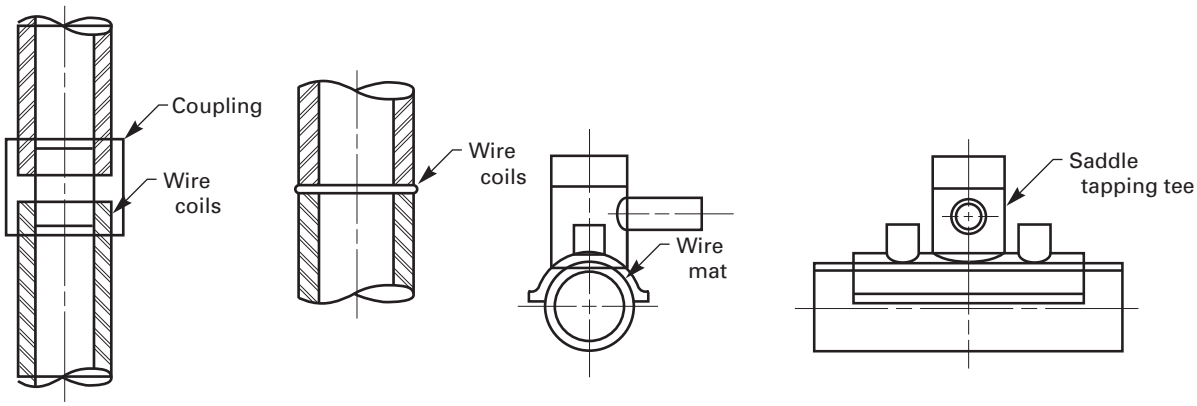

Coupling **Butt** **Saddle**

FIG. A328.5.5 THERMOPLASTIC ELECTROFUSION JOINTS

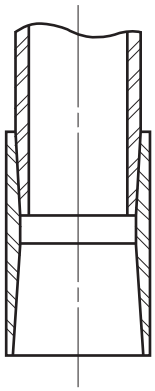

FIG. A328.5.6 FULLY TAPERED THERMOSETTING ADHESIVE JOINT

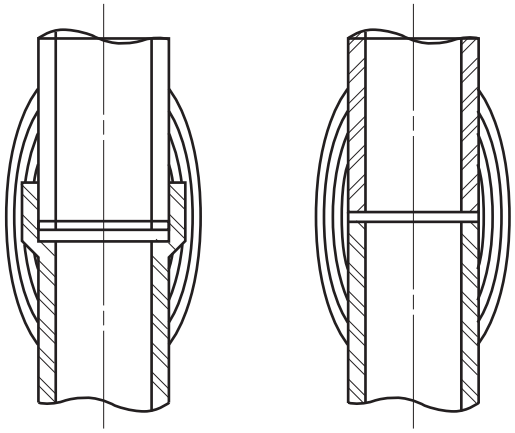

Overwrapped Bell and Spigot Joint **Butt and Wrapped Joint**

FIG. A328.5.7 THERMOSETTING WRAPPED JOINTS

Copyright © 2015 by the American Society of Mechanical Engineers.
No reproduction may be made of this material without written consent of ASME.

(b) Flaring that conforms to para. A329.2 may be used in accordance with para. A318.3.2.

(c) Flaring shall be performed only in accordance with a written flaring procedure specification, and only by qualified operators who have appropriate training or experience in the use of the applicable flaring procedure specification.

A332 BENDING AND FORMING

A332.1 General

Paragraph 332.1 applies in its entirety.

A332.2 Bending

Paragraph 332.2 applies, except para. 332.2.2.

A332.3 Forming

Paragraph 332.3 applies, except for heat treatment.

A334 JOINING NONPLASTIC PIPING

A334.1 Borosilicate Glass Piping

Short unflanged pieces used to correct for differences between fabrication drawings and field dimensions may be cut to length and finished in the field.

A334.2 Repair of Defects

Defective material, joints, and other workmanship in nonplastic piping that fail to meet the requirements of para. A334 or of the engineering design shall be repaired or replaced.

Completed repairs and replacements shall be examined, subject to the same limitations on imperfections as the original work.

A335 ASSEMBLY AND ERECTION

A335.1 Alignment

Paragraph 335.1 applies in its entirety.

A335.2 Flanged and Mechanical Joints

Paragraph 335.2 applies in its entirety.

A335.2.5 Nonmetallic Bolted Joints

(a) Bolted joints in nonmetallic piping may be assembled with any combination of flange material and flange facings, except that the following apply when other than flat face flanges and full face gaskets are used:

(1) consideration shall be given to the strength of the flanges, and to sustained loads, displacement strains, and occasional loads described in paras. A302.3.4 and A302.3.5, and

(2) an appropriate bolt-up sequence shall be specified

(b) Appropriate limits shall be specified for bolt-up torque, and those limits shall not be exceeded.

(c) Flat washers shall be used under bolt heads and nuts.

A335.2.6 Metallic Piping Lined With Nonmetals. In assembling mechanical joints in metallic piping lined with nonmetals, consideration shall be given to means for maintaining electrical continuity between pipe sections, where static sparking could cause ignition of flammable vapors. See Appendix F, para. FA323.4(a).

A335.3 Threaded Joints

Paragraph 335.3 applies except for para. 335.3.2. See para. A335.3.2.

A335.3.2 Joints for Seal Bonding. A threaded joint to be seal bonded shall be made up without thread compound. A joint containing thread compound that leaks during leak testing may be seal bonded in accordance with para. A328.6, provided all compound is removed from exposed threads.

A335.3.4 Tools, Nonmetallic Piping. Either strap wrenches or other full circumference wrenches shall be used to tighten threaded pipe joints. Tools and other devices used to hold or apply forces to the pipe shall be such that the pipe surface is not scored or deeply scratched.

A335.3.5 RTR and RPM Piping. In assembling threaded joints in RTR and RPM piping, where threads may be exposed to fluids that can attack the reinforcing material, threads shall be coated with sufficient resin to cover the threads and completely fill the clearance between the pipe and the fitting.

A335.4 Tubing Joints

A335.4.1 Flared Joints in Thermoplastic Tubing. In addition to preparation in accordance with para. 335.4.1, the end of the tubing shall be cut perpendicular to the tube centerline, preferably with a tubing cutter specially made for thermoplastic tubing. No cuts, scratches, dirt, or surface damage to either inside or outside diameter are permitted on the pipe end to be flared. (14)

A335.4.2 Flareless and Compression Tubing Joints. Paragraph 335.4.2 applies.

A335.5 Caulked Joints

Paragraph 335.5 applies.

A335.6 Special Joints

Paragraph 335.6 applies, except that expanded joints are not permitted.

A335.6.3 Flexible Elastomeric Sealed Joints. Assembly of flexible elastomeric sealed joints shall be in accordance with the manufacturer's recommendations and the following:

(a) Seal and bearing surfaces shall be free from injurious imperfections.

Copyright © 2015 by the American Society of Mechanical Engineers.
No reproduction may be made of this material without written consent of ASME.

(b) Any lubricant used to facilitate joint assembly shall be compatible with the joint components and the intended service.

(c) Proper joint clearances and piping restraints (if not integral in the joint design) shall be provided to prevent joint separation when expansion can occur due to thermal and/or pressure effects.

A335.8 Assembly of Brittle Piping

A335.8.1 General. Care shall be used to avoid scratching of brittle nonmetallic piping in handling and supporting. Any scratched or chipped components shall be replaced. Care shall be used in handling glass-lined and cement-lined metal pipe because the lining can be injured or broken by blows that do not dent or break the pipe.

A335.8.2 Borosilicate Glass Piping. In addition to the precaution in para. A335.8.1, borosilicate glass piping components shall be protected from weld spatter. Any component so damaged shall be replaced. Flanges and cushion inserts shall be carefully fitted and aligned to pipe, fittings, and valve ends. Gaskets shall be of the construction recommended for the joint. Installation and torquing of bolts shall be in accordance with the manufacturer's recommendations.

A335.9 Cleaning of Piping

See Appendix F, para. F335.9.

PART 10
INSPECTION, EXAMINATION, AND TESTING

A340 INSPECTION

Paragraph 340 applies in its entirety.

A341 EXAMINATION

A341.1 General

Paragraph 341.1 applies.

A341.2 Responsibility for Examination

Paragraph 341.2 applies in its entirety.

A341.3 Examination Requirements

A341.3.1 Responsibility for Examination. Paragraph 341.3.1 applies, except for (a) and (b), which apply only for metals.

A341.3.2 Acceptance Criteria. Acceptance criteria shall be as stated in the engineering design and shall at least meet the applicable requirements for bonds in Table A341.3.2 and requirements elsewhere in the Code.

A341.3.3 Defective Components and Workmanship. Paragraph 341.3.3 applies in its entirety.

A341.3.4 Progressive Sampling for Examination. Paragraph 341.3.4 applies in its entirety.

A341.4 Extent of Required Examination

A341.4.1 Examination Normally Required. Piping in Normal Fluid Service shall be examined to the extent specified herein or to any greater extent specified in the engineering design. Acceptance criteria are as stated in para. A341.3.2 unless otherwise specified.

(a) Visual Examination. At least the following shall be examined in accordance with para. 344.2:

(1) materials and components in accordance with para. 341.4.1(a)(1).

(2) at least 5% of fabrication. For bonds, each type of bond made by each bonder and bonding operator shall be represented.

(3) 100% of fabrication for bonds other than circumferential, except those in components made in accordance with a listed specification.

(4) assembly and erection of piping in accordance with paras. 341.4.1(a)(4), (5), and (6).

(b) Other Examination. Not less than 5% of all bonded joints shall be examined by in-process examination in accordance with para. 344.7, the joints to be examined being selected to ensure that the work of each bonder and bonding operator making the production joints is examined.

(c) Certifications and Records. Paragraph 341.4.1(c) applies.

A341.4.2 Examination — Category D Fluid Service. Piping and piping elements for Category D Fluid Service as designated in the engineering design shall be visually examined to the extent necessary to satisfy the examiner that components, materials, and workmanship conform to the requirements of this Code and the engineering design.

A341.5 Supplementary Examination

A341.5.1 General. Any applicable method of examination described in para. 344 may be specified by the engineering design to supplement the examination required by para. A341.4. The extent of supplementary examination to be performed and any acceptance criteria that differ from those in para. A341.3.2 shall be specified in the engineering design.

A341.5.2 Examinations to Resolve Uncertainty. Paragraph 341.5.3 applies.

A342 EXAMINATION PERSONNEL

Paragraph 342 applies in its entirety.

A343 EXAMINATION PROCEDURES

Paragraph 343 applies in its entirety.

Copyright © 2015 by the American Society of Mechanical Engineers.
No reproduction may be made of this material without written consent of ASME.

Table A341.3.2 Acceptance Criteria for Bonds

Kind of Imperfection	Thermoplastic			RTR and RPM [Note (1)]
	Hot Gas Welded	Solvent Cemented	Heat Fusion	Adhesive Cemented
Cracks	None permitted	Not applicable	Not applicable	Not applicable
Unfilled areas in joint	None permitted	None permitted	None permitted	None permitted
Unbonded areas in joint	Not applicable	None permitted	None permitted	None permitted
Inclusions of charred material	None permitted	Not applicable	Not applicable	Not applicable
Unfused filler material inclusions	None permitted	Not applicable	Not applicable	Not applicable
Protrusion of material into pipe bore, % of pipe wall thickness	Not applicable	Cement, 50%	Fused material, 25%	Adhesive, 25%

NOTE:
(1) RTR = reinforced thermosetting resin; RPM = reinforced plastic mortar.

A344 TYPES OF EXAMINATION

A344.1 General

Paragraph 344.1 applies in its entirety.

A344.2 Visual Examination

Paragraph 344.2 applies in its entirety.

A344.5 Radiographic Examination

Radiographic examination may be used in accordance with para. 344.1.2.

A344.6 Ultrasonic Examination

Ultrasonic examination may be used in accordance with para. 344.1.2.

A344.7 In-Process Examination

Paragraph 344.7 applies in its entirety.

A345 TESTING

A345.1 Required Leak Test

(a) Prior to initial operation, each piping system shall be tested to ensure tightness. The test shall be a hydrostatic leak test in accordance with para. A345.4, except as provided herein.

(b) Paragraphs 345.1(a) and (b) apply.

A345.2 General Requirements for Leak Test

Requirements in para. A345.2 apply to more than one type of leak test.

A345.2.1 Limitations on Pressure. Paragraphs 345.2.1(b) and (c) apply.

A345.2.2 Other Test Requirements

(a) Paragraph 345.2.2(a) applies.

(b) The possibility of brittle fracture shall be considered when conducting leak tests on brittle materials or at low temperature.

(c) Paragraphs 345.2.3 through 345.2.7 apply.

A345.3 Preparation for Leak Test

Paragraph 345.3 applies in its entirety, considering bonds in place of welds, and excluding expansion joints.

A345.4 Hydrostatic Leak Test

A345.4.1 Test Fluid. Paragraph 345.4.1 applies.

A345.4.2 Test Pressure

(a) Nonmetallic Piping. Except as provided in para. A345.4.3, the hydrostatic test pressure at any point in a nonmetallic piping system shall be not less than 1.5 times the design pressure, but shall not exceed 1.5 times the maximum rated pressure of the lowest-rated component in the system.

(b) Thermoplastic Piping. For piping systems in which the design temperature is above the test temperature, para. 345.4.2(b) applies, except that S and S_T shall be from Table B-1 instead of A-1.

(c) Metallic Piping with Nonmetallic Lining. Paragraph 345.4.2 applies.

A345.4.3 Hydrostatic Test of Piping With Vessels as a System. Paragraph 345.4.3 applies.

A345.5 Pneumatic Leak Test

A345.5.1 Precautions. In addition to the requirements of para. 345.5.1, a pneumatic test of nonmetallic piping is permitted only with the owner's approval,

Copyright © 2015 by the American Society of Mechanical Engineers.
No reproduction may be made of this material without written consent of ASME.

and precautions in Appendix F, para. FA323.4 should be considered.

A345.5.2 Other Requirements

(a) Paragraphs 345.5.2 through 345.5.5 apply.

(b) PVC and CPVC piping shall not be pneumatically tested.

A345.6 Hydrostatic-Pneumatic Leak Test

If a combined hydrostatic-pneumatic leak test is used, the requirements of para. A345.5 shall be met, and the pressure in the liquid-filled part of the piping shall not exceed the values calculated in accordance with para. A345.4.2 or 345.4.2, as applicable.

A345.7 Initial Service Leak Test

Paragraph 345.7 applies in its entirety for Category D Fluid Service only.

A345.8 Sensitive Leak Test

Paragraph 345.8 applies.

A346 RECORDS

Paragraph 346 applies in its entirety.

Copyright © 2015 by the American Society of Mechanical Engineers.
No reproduction may be made of this material without written consent of ASME.

Chapter VIII
Piping for Category M Fluid Service

(14) **M300 GENERAL STATEMENTS**

(a) Chapter VIII pertains to piping designated by the owner as being in Category M Fluid Service. See para. 300(b)(1) and Appendix M.

(b) The organization, content, and paragraph designations of this Chapter correspond to those of the base Code (Chapters I through VI) and Chapter VII. The prefix M is used.

(c) Provisions and requirements of the base Code and Chapter VII apply only as stated in this Chapter.

(d) Consideration shall be given to the possible need for engineered safeguards as described in Appendix G, para. G300.3, in addition to the inherent safeguards described in paras. G300.1 and G300.2.

(e) This Chapter makes no provision for piping to be used under severe cyclic conditions. If it is not feasible to eliminate the severe cyclic conditions, the engineering design shall specify any necessary provisions in accordance with para. 300(c)(5).

(f) Chapter I applies in its entirety.

PART 1
CONDITIONS AND CRITERIA

M301 DESIGN CONDITIONS

Paragraph 301 applies in its entirety, with the exceptions of paras. 301.3 and 301.5. See paras. M301.3 and M301.5.

M301.3 Design Temperature, Metallic Piping

Use of any temperature other than the fluid temperature as the design temperature shall be substantiated by heat transfer calculations confirmed by tests or by experimental measurements.

M301.5 Dynamic Effects

Paragraph 301.5 applies with the exception of paras. 301.5.1 and 301.5.4. See paras. M301.5.1 and M301.5.4.

M301.5.1 Impact. Design, layout, and operation of piping shall be conducted so as to minimize impact and shock loads. In the event that such loadings are unavoidable, para. 301.5.1 applies.

M301.5.4 Vibration. Suitable dynamic analysis, such as computer simulation, shall be made where necessary to avoid or minimize conditions that lead to detrimental vibration, pulsation, or resonance effects in the piping.

M302 DESIGN CRITERIA (14)

M302.1 General

Paragraph M302 pertains to pressure–temperature ratings, stress criteria, design allowances, and minimum design values, together with permissible variations of these factors as applied to piping design. Paragraph 302 applies in its entirety, with the exception of para. 302.2.4. See para. M302.2.4.

M302.2.4 Allowance for Pressure and Temperature Variations, Metallic Piping. Use of allowances in para. 302.2.4 is not permitted.

PART 2
PRESSURE DESIGN OF METALLIC PIPING COMPONENTS

M303 GENERAL

Paragraph 303 applies in its entirety.

M304 PRESSURE DESIGN OF METALLIC COMPONENTS

Paragraph 304 applies in its entirety.

PART 3
FLUID SERVICE REQUIREMENTS FOR METALLIC PIPING COMPONENTS

M305 PIPE

M305.1 General

Listed pipe may be used in accordance with para. M305.2. Unlisted pipe may be used only as provided in para. 302.2.3.

M305.2 Specific Requirements for Metallic Pipe

Pipe listed in para. 305.2.2 shall not be used. The provision for severe cyclic conditions in para. 305.2.3 does not apply [see para. M300(e)].

M306 METALLIC FITTINGS, BENDS, MITERS, LAPS, AND BRANCH CONNECTIONS

General. Fittings, bends, miters, laps, and branch connections may be used in accordance with paras. M306.1 through M306.6. Pipe and other materials used in such

Copyright © 2015 by the American Society of Mechanical Engineers.
No reproduction may be made of this material without written consent of ASME.

components shall be suitable for the manufacturing process and the fluid service.

(14) **M306.1 Pipe Fittings**

Paragraph 306.1 applies in its entirety, with the exception of paras. 306.1.3 and 306.1.4. See para. M306.1.3.

M306.1.3 Specific Fittings

(a) Proprietary welding branch outlet fittings that have been design proof tested successfully as prescribed in ASME B16.9, MSS SP-97, or the BPV Code, Section VIII, Division 1, UG-101 may be used within their established ratings.

(b) Fittings conforming to MSS SP-43 and MSS SP-119 shall not be used.

(c) Proprietary "Type C" lap-joint stub-end buttwelding fittings shall not be used.

(14) **M306.2 Pipe Bends**

Paragraph 306.2 applies, except that bends designed as creased or corrugated shall not be used.

M306.3 Miter Bends

A miter bend shall conform to para. 306.3.1 and shall not make a change in direction at a single joint (angle α in Fig. 304.2.3) greater than 22.5 deg. Paragraph 306.3.3 does not apply [see para. M300(e)].

M306.4 Fabricated or Flared Laps

M306.4.1 General. The following requirements do not apply to fittings conforming to para. M306.1, nor to laps integrally forged on pipe ends. Paragraph 306.4.1 applies.

(14) **M306.4.2 Flared Laps.** Flared laps shall not be used.

M306.5 Fabricated Branch Connections

The following requirements do not apply to fittings conforming to para. M306.1. Paragraph 306.5.1 applies, with the following exceptions:

(a) Of the methods listed in para. 304.3.1(a), the one in subpara. (3) may be used only if those in (1) and (2) are unavailable.

(b) Of the branch connections described in paras. 304.3.2(b) and (c), those having threaded outlets are permitted only in accordance with para. M314 and those having socket welding outlets are permitted only in accordance with para. M311.2.

M306.6 Closures

The following requirements do not apply to blind flanges or to fittings conforming to para. M306.1. Of the closures described in para. 304.4, flat closures in accordance with the BPV Code, Section VIII, Division 1, UG-34 and UW-13, and conical closures without transition knuckles [UG-32(g) and UG-33(f)], may be used only if others are not available. The requirements in M306.5 apply to openings in closures [see also para. 304.4.2(b)].

M307 METALLIC VALVES AND SPECIALTY COMPONENTS (14)

The following requirements for valves shall also be met as applicable by other pressure-containing piping components, e.g., traps, strainers, and separators. See also Appendix F, paras. F301.4 and F307.

M307.1 General

Paragraph 307.1 applies, subject to the requirements in para. M307.2.

M307.2 Specific Requirements

(a) Paragraph 307.2.2 applies.

(b) Valves having threaded bonnet joints (other than union joints) shall not be used.

(c) Only metallic valves conforming to the following requirements may be used:

(1) Special consideration shall be given to valve design to prevent stem leakage to the environment.

(2) Bonnet or cover plate closures and body joints shall be flanged, secured by at least four bolts with gasketing conforming to para. 308.4; or proprietary, attached by bolts, lugs, or other substantial means, and having a gasket design that increases gasket compression as fluid pressure increases; or secured with a full penetration weld made in accordance with para. M311; or secured by a straight thread sufficient for mechanical strength, a metal-to-metal seat, and a seal weld made in accordance with para. M311, all acting in series.

M308 FLANGES, BLANKS, FLANGE FACINGS, AND GASKETS

Paragraph 308.1 applies in its entirety.

M308.2 Specific Requirements for Metallic Flanges

Paragraph 308.2.4 does not apply [see para. M300(e)]. The following shall not be used:

(a) single-welded slip-on flanges

(b) expanded-joint flanges

(c) slip-on flanges used as lapped flanges unless the requirements in para. 308.2.1(c) are met

(d) threaded metallic flanges, except those employing lens rings or similar gaskets and those used in lined pipe where the liner extends over the gasket face

M308.3 Flange Facings (14)

Paragraph 308.3 applies in its entirety.

M308.4 Gaskets (14)

Paragraph 308.4 applies in its entirety.

Copyright © 2015 by the American Society of Mechanical Engineers.
No reproduction may be made of this material without written consent of ASME.

M308.5 Blanks

All blanks shall be marked with material, rating, and size.

M309 BOLTING

Paragraph 309 applies, except for para. 309.2.4 [see para. M300(e)].

PART 4
FLUID SERVICE REQUIREMENTS FOR METALLIC PIPING JOINTS

M310 METALLIC PIPING, GENERAL

Paragraph 310 applies in its entirety.

M311 WELDED JOINTS IN METALLIC PIPING

Welded joints may be made in any metal for which it is possible to qualify welding procedures, welders, and welding operators in accordance with para. M328.

M311.1 General

Paragraph 311.1 applies with the following exceptions:

(a) Split backing rings shall not be used.

(b) Socket welded joints greater than DN 50 (NPS 2) are not permitted.

(c) Examination shall be in accordance with para. M341.4.

(14) **M311.2 Specific Requirements**

Paragraphs 311.2.4(a); 311.2.5(a), (b), and (d); 311.2.6; and 311.2.7 apply.

M312 FLANGED JOINTS IN METALLIC PIPING

Paragraph 312 applies in its entirety.

M313 EXPANDED JOINTS IN METALLIC PIPING

Expanded joints shall not be used.

M314 THREADED JOINTS IN METALLIC PIPING

M314.1 General

Paragraphs 314.1(a), (b), and (c) apply.

M314.2 Specific Requirements

M314.2.1 Taper-Threaded Joints. Paragraph 314.2.1 applies except that only components suitable for Normal Fluid Service in sizes $8 \leq DN \leq 25$ ($\frac{1}{4} \leq NPS \leq 1$) are permitted (see Table 314.2.1). Sizes smaller than DN 20 (NPS $\frac{3}{4}$) shall be safeguarded (see Appendix G).

M314.2.2 Straight-Threaded Joints. Paragraph 314.2.2 applies. In addition, components shall have adequate mechanical strength and the joint shall have a confined seating surface not subject to relative rotation as or after the joint is tightened. [See Fig. 335.3.3 sketches (b) and (c) for acceptable construction.]

M315 TUBING JOINTS IN METALLIC PIPING

Paragraph 315 applies, except for para. 315.2(b).

M316 CAULKED JOINTS

Caulked joints shall not be used.

M317 SOLDERED AND BRAZED JOINTS

Soldered, brazed, and braze welded joints shall not be used.

M318 SPECIAL JOINTS IN METALLIC PIPING

Paragraph 318 applies, with the exception that adhesive joints and bell type joints shall not be used.

PART 5
FLEXIBILITY AND SUPPORT OF METALLIC PIPING

M319 FLEXIBILITY OF METALLIC PIPING

Paragraph 319 applies, with the exception that the simplified rules in para. 319.4.1(c) do not apply.

M320 ANALYSIS OF SUSTAINED LOADS (14)

Paragraph 320 applies.

M321 PIPING SUPPORT (14)

Paragraph 321 applies, except that supporting elements welded to the piping shall be of listed material.

PART 6
SYSTEMS

M322 SPECIFIC PIPING SYSTEMS (14)

M322.3 Instrument Piping

Paragraph 322.3 applies, with the exception that for signal tubing in contact with process fluids and process temperature–pressure conditions

(a) tubing shall be not larger than 16 mm ($\frac{5}{8}$ in.) O.D. and shall be suitable for the service

(b) an accessible block valve shall be provided to isolate the tubing from the pipeline

(c) joining methods shall conform to the requirements of para. M315

M322.6 Pressure-Relieving Systems

Paragraph 322.6 applies, except for para. 322.6.3. See para. M322.6.3.

Copyright © 2015 by the American Society of Mechanical Engineers.
No reproduction may be made of this material without written consent of ASME.

M322.6.3 Overpressure Protection

(a) Paragraph 322.6.3(a) applies.

(b) Relief set pressure shall be in accordance with BPV Code, Section VIII, Division 1.

(c) The maximum relieving pressure shall be in accordance with Section VIII, Division 1.

PART 7
METALLIC MATERIALS

M323 GENERAL REQUIREMENTS

(14) **M323.1 Materials and Specifications**

Paragraph 323.1.1 applies. See paras. M323.1.2, M323.1.3, and M323.1.4.

(14) **M323.1.2 Unlisted Materials.** Paragraph 323.1.2 applies, with the additional requirement that the designer shall fully document the determination of allowable stresses as part of the engineering design.

M323.1.3 Unknown Materials. Materials of unknown specification shall not be used.

M323.1.4 Reclaimed Metallic Materials. Reclaimed materials may be used when the material certification records are available for the specific materials employed, and the designer is assured that the material is sound and free from harmful defects.

M323.2 Temperature Limitations

Paragraph 323.2 applies with the exception that, in regard to lower temperature limits, the relaxation of minimum temperature limits stated in Note (3) of Table 323.2.2 is not permitted.

M323.3 Impact Testing Methods and Acceptance Criteria

Paragraph 323.3 applies in its entirety.

M323.4 Fluid Service Requirements for Metallic Materials

Paragraph 323.4.1 applies.

M323.4.2 Specific Requirements. Paragraph 323.4.2 applies, except that cast irons other than ductile iron shall not be used for pressure-containing parts, and lead and tin shall be used only as linings.

M323.4.3 Metallic Cladding and Lining Materials. In addition to the requirements of para. 323.4.3, where materials covered in paras. 323.4.2(c)(2) and 323.4.3 are used as cladding or lining in which the cladding or lining also serves as a gasket or as part of the flange facing, consideration shall be given to the design of the flanged joint to prevent leakage to the environment.

M323.5 Deterioration of Materials in Service

Paragraph 323.5 applies in its entirety.

M325 MATERIALS — MISCELLANEOUS

M325.1 Joining and Auxiliary Materials

In applying para. 325, materials such as solvents, brazes, and solders shall not be used. Nonmetallic materials used as gaskets and packing materials shall be suitable for the fluid service.

PART 8
STANDARDS FOR PIPING COMPONENTS

M326 DIMENSIONS AND RATINGS OF COMPONENTS

Paragraph 326.1.3 applies.

M326.1 Dimensional Requirements

M326.1.1 Listed Piping Components. Except for prohibitions and restrictions stated elsewhere in Chapter VIII, components made in accordance with standards and specifications listed in Table 326.1 may be used in Category M service.

M326.1.2 Unlisted Piping Components. (14) Paragraph 326.1.2 applies, except that dimensions of unlisted components shall be governed by requirements in paras. 303 and 304.

M326.2 Ratings of Components

Paragraph 326.2 applies in its entirety.

M326.3 Reference Documents

Paragraph 326.3 applies in its entirety.

PART 9
FABRICATION, ASSEMBLY, AND ERECTION OF METALLIC PIPING

M327 GENERAL

Metallic piping materials and components are prepared for assembly and erection by one or more of the fabrication processes in paras. M328, M330, M331, and M332. When any of these processes is used in assembly and erection, requirements are the same as for fabrication.

M328 WELDING OF METALS

Welding shall be in accordance with paras. M311.1 and 328, except see para. M328.3.

M328.3 Welding Materials

Paragraph 328.3 applies in its entirety, except that split backing rings shall not be used, and removable backing rings and consumable inserts may be used only where their suitability has been demonstrated by procedure qualification.

Copyright © 2015 by the American Society of Mechanical Engineers.
No reproduction may be made of this material without written consent of ASME.

M330 PREHEATING OF METALS

Paragraph 330 applies in its entirety.

M331 HEAT TREATMENT OF METALS

Paragraph 331 applies in its entirety, with the exception that no requirements less stringent than those of Table 331.1.1 shall be specified.

M332 BENDING AND FORMING OF METALS

Paragraph 332 applies in its entirety, except that bending that conforms to para. 332.2.3 is not permitted.

M335 ASSEMBLY AND ERECTION OF METALLIC PIPING

M335.1 General

M335.1.1 Alignment. In addition to the requirements of para. 335.1.1, any bending or forming required for alignment and fit-up shall be heat treated if required by para. 332.4.

M335.2 Flanged Joints

Paragraph 335.2 applies in its entirety.

M335.3 Threaded Joints

Paragraphs 335.3.1 and 335.3.2 apply. See paras. M335.3.3 and M335.3.4.

M335.3.3 Straight-Threaded Joints. The requirements of para. 335.3.3 are subject to the limitations in para. M322.

M335.3.4 Condition of Threads. Taper-threaded components and threaded ends permitted under para. M314.2.1 shall be examined before assembly for cleanliness and continuity of threads and shall be rejected if not in conformance with ASME B1.20.1 or other applicable standards.

M335.4 Tubing Joints

M335.4.1 Flared Tubing Joints. The requirements of para. 335.4.1 apply; however, see para. M322 for limitations associated with specific piping systems.

M335.4.2 Flareless and Compression Tubing Joints. The requirements of para. 335.4.2 apply; however, see para. M322 for limitations associated with specific piping systems.

M335.6 Special Joints

Special joints shall be in accordance with paras. M318 and 335.6.1.

M335.9 Cleaning of Piping

See Appendix F, para. F335.9.

M335.10 Identification of Piping (14)

See Appendix F, para. F335.10.

PART 10
INSPECTION, EXAMINATION, TESTING, AND RECORDS OF METALLIC PIPING

M340 INSPECTION

Paragraph 340 applies in its entirety.

M341 EXAMINATION

Paragraphs 341.1, 341.2, 341.3, and 341.5 apply in their entirety. See para. M341.4.

M341.4 Extent of Required Examination (14)

Paragraph 341.4.1 applies with the following exceptions:

(a) Visual Examination

(1) All fabrication shall be examined.

(2) All threaded, bolted, and other mechanical joints shall be examined.

(b) Other Examination. The random radiography/ultrasonic examination requirements of para. 341.4.1(b)(1) apply, except that at least 20% of circumferential butt and miter welds and of fabricated lap and branch connection welds comparable to those shown in Fig. 328.5.4E and Fig. 328.5.5, illustrations (d) and (e), shall be examined.

M342 EXAMINATION PERSONNEL

Paragraph 342 applies.

M343 EXAMINATION PROCEDURES

Paragraph 343 applies.

M344 TYPES OF EXAMINATION

Paragraph 344 applies in its entirety.

M345 TESTING (14)

Paragraph 345 applies, except that

(a) a sensitive leak test in accordance with para. 345.8 shall be included in the required leak test (para. 345.1)

(b) the initial service leak test (para. 345.7) does not apply

M346 RECORDS

Paragraph 346 applies in its entirety.

PARTS 11 THROUGH 20, CORRESPONDING TO CHAPTER VII

See para. M300(b).

Copyright © 2015 by the American Society of Mechanical Engineers.
No reproduction may be made of this material without written consent of ASME.

MA300 GENERAL STATEMENTS

Paragraphs MA300 through MA346 apply to nonmetallic piping and piping lined with nonmetals, based on Chapter VII. Paragraph A300(d) applies.

PART 11
CONDITIONS AND CRITERIA

MA301 DESIGN CONDITIONS

Paragraph A301 applies in its entirety.

MA302 DESIGN CRITERIA

Paragraphs A302.1 and A302.4 apply. See paras. MA302.2 and MA302.3.

MA302.2 Pressure–Temperature Design Criteria

Paragraph A302.2 applies, with the exception of para. A302.2.4. See para. MA302.2.4.

MA302.2.4 Allowances for Pressure and Temperature Variation. Paragraph A302.2.4(a) applies to both nonmetallic piping and to metallic piping with nonmetallic lining.

(14) MA302.3 Allowable Stresses and Other Design Limits

Paragraph A302.3 applies.

MA302.4 Allowances

Paragraph 302.4 applies in its entirety.

PART 12
PRESSURE DESIGN OF NONMETALLIC PIPING COMPONENTS

(14) MA303 GENERAL

Paragraph A303 applies in its entirety.

MA304 PRESSURE DESIGN OF NONMETALLIC COMPONENTS

Paragraph A304 applies in its entirety.

PART 13
FLUID SERVICE REQUIREMENTS FOR NONMETALLIC PIPING COMPONENTS

(14) MA305 PIPE

Paragraph A305 applies in its entirety.

(14) MA306 NONMETALLIC FITTINGS, BENDS, MITERS, LAPS, AND BRANCH CONNECTIONS

Paragraphs A306.1 and A306.2 apply. See para. MA306.3.

MA306.3 Miter Bends

Miter bends not designated as fittings conforming to para. A306.1 shall not be used.

MA306.4 Fabricated Laps

Fabricated laps shall not be used.

MA306.5 Fabricated Branch Connections

Nonmetallic fabricated branch connections shall not be used.

MA307 VALVES AND SPECIALTY COMPONENTS (14)

Paragraph A307 applies, except that nonmetallic valves and specialty components shall not be used.

MA308 FLANGES, BLANKS, FLANGE FACINGS, AND GASKETS (14)

Paragraphs A308.1, 308.3, and A308.4 apply in their entirety. See para. MA308.2.

MA308.2 Nonmetallic Flanges

Threaded nonmetallic flanges shall not be used.

MA309 BOLTING (14)

Paragraph A309 applies in its entirety.

PART 14
FLUID SERVICE REQUIREMENTS FOR NONMETALLIC PIPING JOINTS

MA310 GENERAL

Paragraph 310 applies in its entirety.

MA311 BONDED JOINTS

MA311.1 General

Paragraph A311.1 applies in its entirety.

MA311.2 Specific Requirements

Hot gas welded, heat fusion, solvent cemented, and adhesive bonded joints are not permitted except in linings.

MA312 FLANGED JOINTS

Paragraph 312 applies in its entirety.

MA313 EXPANDED JOINTS

Expanded joints shall not be used.

Copyright © 2015 by the American Society of Mechanical Engineers.
No reproduction may be made of this material without written consent of ASME.

MA314 THREADED JOINTS

(14) **MA314.1 General**

Threaded joints shall not be used.

MA315 TUBING JOINTS IN NONMETALLIC PIPING

Paragraph A315 applies in its entirety.

MA316 CAULKED JOINTS

Caulked joints shall not be used.

MA318 SPECIAL JOINTS

Paragraph A318 applies in its entirety.

PART 15
FLEXIBILITY AND SUPPORT OF NONMETALLIC PIPING

MA319 PIPING FLEXIBILITY

Paragraph A319 applies in its entirety.

MA321 PIPING SUPPORT

Paragraph A321 applies in its entirety.

PART 16
NONMETALLIC AND NONMETALLIC LINED SYSTEMS

MA322 SPECIFIC PIPING SYSTEMS

Paragraph A322 applies in its entirety.

PART 17
NONMETALLIC MATERIALS

(14) **MA323 GENERAL REQUIREMENTS**

Paragraph A323.1 applies with the additional requirement described in para. MA323.1.2. Paragraph A323.2 applies in its entirety. See para. MA323.4.

(14) **MA323.1.2 Unlisted Materials.** Paragraph 323.1.2 applies with the additional requirement that the designer shall fully document the determination of allowable stresses as part of the engineering design.

MA323.4 Fluid Service Requirements for Nonmetallic Materials

Paragraph A323.4.1 applies. See paras. MA323.4.2 and MA323.4.3.

MA323.4.2 Specific Requirements. Paragraph A323.4.2 applies, except that materials listed under paras. A323.4.2(a), (b), and (d) may be used only as linings. Thermoplastics may be used as gaskets in accordance with paras. M325.1 and MA323.4.3.

MA323.4.3 Nonmetallic Lining Materials. (14) Paragraph A323.4.3 applies with the additional requirement that where a material in para. A323.4.2 is used as a lining that also serves as a gasket or as part of the flange facing, consideration shall be given to design of the flanged joint to prevent leakage to the environment.

PART 18
STANDARDS FOR NONMETALLIC AND NONMETALLIC LINED PIPING COMPONENTS

MA326 DIMENSIONS AND RATINGS OF COMPONENTS

Paragraph A326 applies in its entirety. Table A326.1 applies, except for components and systems prohibited or restricted elsewhere in this Chapter.

PART 19
FABRICATION, ASSEMBLY, AND ERECTION OF NONMETALLIC AND NONMETALLIC LINED PIPING

MA327 GENERAL (14)

Paragraph A327 applies in its entirety.

MA328 BONDING OF PLASTICS

Paragraph A328 applies in its entirety.

MA329 FABRICATION OF PIPING LINED WITH NONMETALS

Paragraph A329 applies in its entirety.

MA332 BENDING AND FORMING (14)

Paragraph A332 applies in its entirety.

MA334 JOINING NONPLASTIC PIPING

Paragraph A334 applies in its entirety.

MA335 ASSEMBLY AND ERECTION

Paragraph A335 applies in its entirety.

PART 20
INSPECTION, EXAMINATION, TESTING, AND RECORDS OF NONMETALLIC AND NONMETALLIC LINED PIPING

MA340 INSPECTION

Paragraph 340 applies in its entirety.

MA341 EXAMINATION

Paragraph A341 applies in its entirety.

Copyright © 2015 by the American Society of Mechanical Engineers.
No reproduction may be made of this material without written consent of ASME.

(14) **MA341.1 General**

Paragraphs 341.1, 341.2, A341.3, and A341.5 apply in their entirety. See para. MA341.4.

(14) **MA341.4 Extent of Required Examination**

Paragraph A341.4.1 applies, except as follows:

(a) Visual Examination

(1) All fabrication shall be visually examined.

(2) All bolted and other mechanical joints shall be examined.

(14) **MA342 EXAMINATION PERSONNEL**

Paragraph 342 applies in its entirety.

(14) **MA343 EXAMINATION PROCEDURES**

Paragraph 343 applies in its entirety.

MA344 TYPES OF EXAMINATION

Paragraph A344 applies in its entirety.

MA345 TESTING (14)

Paragraph A345 applies except that

(a) a sensitive leak test in accordance with para. 345.8 shall be included in the required leak test (para. A345.1)

(b) the initial service leak test (para. A345.7) does not apply

MA346 RECORDS

Paragraph 346 applies in its entirety.

Copyright © 2015 by the American Society of Mechanical Engineers.
No reproduction may be made of this material without written consent of ASME.

Chapter IX
High Pressure Piping

K300 GENERAL STATEMENTS

(a) Applicability. This Chapter pertains to piping designated by the owner as being in High Pressure Fluid Service. Its requirements are to be applied in full to piping so designated. High pressure is considered herein to be pressure in excess of that allowed by the ASME B16.5 Class 2500 rating for the specified design temperature and material group. However, there are no specified pressure limitations for the application of these rules.

(b) Responsibilities. In addition to the responsibilities stated in para. 300(b),

(1) for each piping system designated as being in High Pressure Fluid Service, the owner shall provide all information necessary to perform the analyses and testing required by this Chapter

(2) the designer shall make a written report to the owner summarizing the design calculations and certifying that the design has been performed in accordance with this Chapter

(c) The identification, intent, and Code requirements in paras. 300(a), (c), (d), (e), and (f) apply.

(d) The organization, content, and, wherever possible, paragraph designations of this Chapter correspond to those of the first six Chapters (the base Code). The prefix K is used.

(e) Provisions and requirements of the base Code apply only as stated in this Chapter.

K300.1 Scope

K300.1.1 Content and Coverage. Paragraph 300.1.1 applies with the exceptions stated in paras. K300.1.3 and K300.1.4.

K300.1.2 Packaged Equipment Piping. Interconnecting piping as described in para. 300.1.2 shall conform to the requirements of this Chapter.

K300.1.3 Exclusions. In addition to the exclusions stated in para. 300.1.3, this Chapter excludes nonmetallic and nonmetallic-lined piping.

K300.1.4 Category M Fluid Service. This Chapter makes no provision for piping in Category M Fluid Service. If such piping is required by the owner, the engineering design shall be developed as provided in para. 300(c)(5).

K300.2 Definitions

Paragraph 300.2 applies except for terms relating only to nonmetals and severe cyclic conditions.

The term allowable stress is used in lieu of basic allowable stress.

The term safeguarding and other terms characterizing hazardous fluid services are not used in this Chapter but should be taken into account in design.

K300.3 Nomenclature

Paragraph 300.3 applies.

K300.4 Status of Appendices

Paragraph 300.4 and Table 300.4 apply, except for Appendices A, B, H, L, V, and X.

PART 1
CONDITIONS AND CRITERIA

K301 DESIGN CONDITIONS

Paragraph 301 applies with the exceptions of paras. 301.1, 301.2, 301.3, and 301.5.

K301.1 General

Paragraph 301.1 applies but refer to para. K301 instead of para. 301.

K301.2 Design Pressure

K301.2.1 General. Paragraph 301.2.1(a) applies except that reference to para. 302.2.4 is not applicable. Paragraphs 301.2.1(b) and (c) apply, but refer to para. K304 instead of para. 304.

K301.2.2 Required Pressure Containment or Relief. Paragraphs 301.2.2(a) and (b) apply, but refer to para. K322.6.3 instead of para. 322.6.3. Paragraph 301.2.2(c) is not applicable.

K301.3 Design Temperature

Paragraph 301.3 applies with the exceptions of paras. 301.3.1 and 301.3.2 and the following exceptions in the text:

(a) Refer to para. K301.2 instead of para. 301.2.

(b) Refer to para. K301.3.2 instead of para. 301.3.2.

K301.3.1 Design Minimum Temperature. Paragraph 301.3.1 applies, but refer to para. K323.2.2 instead of para. 323.2.2.

Copyright © 2015 by the American Society of Mechanical Engineers.
No reproduction may be made of this material without written consent of ASME.

K301.3.2 Uninsulated Components. The fluid temperature shall be used as the component temperature.

K301.5 Dynamic Effects

Paragraph 301.5 applies with the exception of para. 301.5.4.

K301.5.4 Vibration. Suitable dynamic analysis shall be made where necessary, to avoid or minimize conditions that lead to detrimental vibration, pulsation, or resonance effects in the piping.

K302 DESIGN CRITERIA

K302.1 General

In para. K302, pressure–temperature ratings, stress criteria, design allowances, and minimum design values are stated, and permissible variations of these factors as applied to design of high pressure piping systems are formulated.

The designer shall be satisfied as to the adequacy of the design, and of materials and their manufacture, considering at least the following:

(a) tensile, compressive, flexural, and shear strength at design temperature

(b) fatigue strength

(c) design stress and its basis

(d) ductility and toughness

(e) possible deterioration of mechanical properties in service

(f) thermal properties

(g) temperature limits

(h) resistance to corrosion and erosion

(i) fabrication methods

(j) examination and testing methods

(k) hydrostatic test conditions

(l) bore imperfections

K302.2 Pressure–Temperature Design Criteria

K302.2.1 Listed Components Having Established Ratings. Pressure–temperature ratings for certain piping components have been established and are contained in some of the standards in Table K326.1. Unless limited elsewhere in this Chapter, those ratings are acceptable for design pressures and temperatures under this Chapter. With the owner's approval, the rules and limits of this Chapter may be used to extend the pressure–temperature ratings of a component beyond the ratings of the listed standard, but not beyond the limits stated in para. K323.2.

K302.2.2 Listed Components Not Having Specific Ratings

(a) Piping components for which design stresses have been developed in accordance with para. K302.3, but that do not have specific pressure–temperature ratings, shall be rated by rules for pressure design in para. K304, within the range of temperatures for which stresses are shown in Table K-1, modified as applicable by other rules of this Chapter.

(b) Piping components that do not have allowable stresses or pressure–temperature ratings shall be qualified for pressure design as required by para. K304.7.2.

K302.2.3 Unlisted Components

(a) Piping components not listed in Table K326.1 or Table K-1, but that conform to a published specification or standard, may be used subject to the following requirements:

(1) The designer shall determine that composition, mechanical properties, method of manufacture, and quality control are comparable to the corresponding characteristics of listed components.

(2) Pressure design shall be verified in accordance with para. K304, including the fatigue analysis required by para. K304.8.

(b) Other unlisted components shall be qualified for pressure design as required by para. K304.7.2.

K302.2.4 Allowance for Pressure and Temperature Variations. Variations in pressure above the design pressure at the coincident temperature, except for accumulation during pressure relieving (see para. K322.6.3), are not permitted for any piping system.

K302.2.5 Ratings at Junction of Different Services. Paragraph 302.2.5 applies.

K302.3 Allowable Stresses and Other Design Limits

K302.3.1 General. The allowable stresses defined below shall be used in design calculations unless modified by other provisions of this Chapter.

(a) Tension. Allowable stresses in tension for use in design in accordance with this Chapter are listed in Table K-1, except that maximum allowable stress values and design stress intensity values for bolting, respectively, are listed in the BPV Code, Section II, Part D, Tables 3 and 4.

The tabulated stress values in Table K-1 are grouped by materials and product form and are for stated temperatures up to the limit provided for the materials in para. K323.2.1. Straight line interpolation between temperatures to determine the allowable stress for a specific design temperature is permissible. Extrapolation is not permitted.

(b) Shear and Bearing. Allowable stress in shear shall be 0.80 times the allowable stress in tension tabulated in Table K-1. Allowable stress in bearing shall be 1.60 times the allowable stress in tension.

(c) Compression. Allowable stress in compression shall be no greater than the allowable stress in tension tabulated in Table K-1. Consideration shall be given to structural stability.

(d) Fatigue. Allowable values of stress amplitude, which are provided as a function of design life in the

Copyright © 2015 by the American Society of Mechanical Engineers.
No reproduction may be made of this material without written consent of ASME.

BPV Code, Section VIII, Division 2, Part 3, para. 3.15; or Division 3, Article KD-3; as applicable, may be used in fatigue analysis in accordance with para. K304.8.

K302.3.2 Bases for Allowable Stresses. The bases for establishing allowable stress values for materials in this Chapter are as follows:

(a) Bolting Materials. The criteria of Section II, Part D, Appendix 2, para. 2-120 or 2-130, or Section VIII, Division 3, Article KD-6, para. KD-620, as applicable, apply.

(b) Other Materials. For materials other than bolting materials, the following rules apply:

(1) Except as provided in (b)(2) below, allowable stress values at design temperature for materials shall not exceed the lower of two-thirds of S_Y and two-thirds of S_{yt}. S_{yt} is determined in accordance with eq. (31)

$$S_{yt} = S_Y R_Y \tag{31}$$

where

R_Y = ratio of the average temperature dependent trend curve value of yield strength to the room temperature yield strength

S_Y = specified minimum yield strength at room temperature

S_{yt} = yield strength at temperature

(2) For solution heat treated austenitic stainless steels and certain nickel alloys with similar stress-strain behavior, allowable stress values shall not exceed the lower of two-thirds of S_Y and 90% of S_{yt}.

Application of stress values so determined is not recommended for flanged joints and other components in which slight deformation can cause leakage or malfunction. [These values are shown in *italics* or **boldface** in Table K-1, as explained in Note (5) to Appendix K Tables.] Instead, either 75% of the stress value in Table K-1 or two-thirds of the yield strength at temperature listed in Section II, Part D, Table Y-1, as applicable, should be used.

(c) Unlisted Materials. For a material that conforms to para. K323.1.2, allowable stress values at design temperature shall not exceed the lower of two-thirds of S_Y and two-thirds of S_{yt}.

(1) Except as provided in (c)(2) below, S_{yt} shall be determined in accordance with eq. (31).

(2) If the yield strength at temperature for an unlisted material is contained in Section II, Part D, Table Y-1, that yield strength at temperature value may be used directly in the determination of allowable stress.

(d) Cyclic Stresses. Allowable values of alternating stress or equipment alternating stress, as applicable, shall be in accordance with Section VIII, Division 2, Part 3, para. 3.15 and Part 5; or Division 3, Article KD-3; respectively.

K302.3.3 Casting Quality Factor.[1] The casting quality factor, E_c, shall be 1.00 by conformance to all of the following supplementary requirements: **(14)**

(a) All surfaces shall have a roughness average, R_a, not greater than 6.3 μm R_a (250 μin. R_a); see ASME B46.1 for a definition of R_a.

(b) All nonferromagnetic surfaces shall be examined using the liquid penetrant method in accordance with ASTM E165, with acceptability judged in accordance with MSS SP-93, Table 1. All ferromagnetic surfaces shall be examined using either the liquid penetrant method or the magnetic particle method, in accordance with ASTM E165 or ASTM E709, respectively. Acceptability of imperfections, including those in weld repairs, shall be judged in accordance with MSS SP-93, Table 1 or MSS SP-53, Table 1, respectively.

(c) Each casting shall be fully examined either ultrasonically in accordance with ASTM E114 or radiographically in accordance with ASTM E94. Cracks and hot tears (Category D and E discontinuities in accordance with the standards listed in Table K302.3.3D) and imperfections whose depths exceed 3% of nominal wall thickness are not permitted. Acceptable severity levels for radiographic examination of castings shall be in accordance with Table K302.3.3D.

K302.3.4 Weld Joint Quality Factor. Piping components containing welds shall have a weld joint quality factor $E_j = 1.00$ (see Table 302.3.4), except that the acceptance criteria for these welds shall be in accordance with para. K341.3.2. Spiral (helical seam) welds are not permitted.

K302.3.5 Limits of Calculated Stresses Due to Sustained Loads and Displacement Strains

(a) Internal Pressure Stresses. Stresses due to internal pressure shall be considered safe when the wall thickness of the piping component, and its means of stiffening, meet the requirements of para. K304.

(b) External Pressure Stresses. Stresses due to external pressure shall be considered safe when the wall thickness of the piping component, and its means of stiffening, meet the requirements of para. K304.

(c) Longitudinal Stresses, S_L. The sum of the longitudinal stresses S_L in any component in a piping system due to sustained loads, such as pressure and weight, shall not exceed S_h in (d) below. The thickness of pipe used in calculating S_L shall be the nominal thickness minus mechanical, corrosion, and erosion allowance, c.

[1] See Notes to Tables 302.3.3C and 302.3.3D for titles of standards referenced herein.

Copyright © 2015 by the American Society of Mechanical Engineers.
No reproduction may be made of this material without written consent of ASME.

Table K302.3.3D Acceptable Severity Levels for Steel Castings

Thickness Examined, mm (in.)	Applicable Standards	Acceptable Severity Level	Acceptable Discontinuity Categories
$\overline{T} \leq 51$ (2)	ASTM E446	1	A, B, C
$51 < \overline{T} \leq 114$ (4.5)	ASTM E186	1	A, B, C
$114 < \overline{T} \leq 305$ (12)	ASTM E280	1	A, B, C

(d) Allowable Displacement Stress Range, S_A. The computed displacement stress range, S_E, in a piping system (see para. 319.4.4) shall not exceed the allowable displacement stress range, S_A (see para. 319.2.3), calculated by

$$S_A = 1.25S_c + 0.25S_h \tag{32}$$

where

S_c = allowable stress from Table K-1 at minimum metal temperature expected during the displacement cycle under analysis

S_h = allowable stress from Table K-1 at maximum metal temperature expected during the displacement cycle under analysis

K302.3.6 Limits of Calculated Stresses Due to Occasional Loads

(a) Operation. The sum of the longitudinal stresses, S_L, due to sustained loads, such as pressure and weight, and of the stresses produced by occasional loads, such as wind or earthquake, may be as much as 1.2 times the allowable stress given in Table K-1. Where the allowable stress value in Table K-1 exceeds two-thirds of S_{yt}, S_L shall not exceed 90% of S_{yt} listed in the BPV Code, Section II, Part D, Table Y-1. Wind and earthquake forces need not be considered as acting concurrently.

(b) Test. Stresses due to test conditions are not subject to the limitations in para. K302.3. It is not necessary to consider other occasional loads, such as wind and earthquake, as occurring concurrently with test loads.

K302.4 Allowances

In determining the minimum required thickness of a piping component, allowances shall be included for corrosion, erosion, and thread or groove depth. See the definition of c in para. K304.1.1(b).

K302.5 Mechanical Strength

Paragraph 302.5 applies. In addition, a fatigue analysis in accordance with para. K304.8 shall be performed for any means used to increase the strength of a piping component.

PART 2
PRESSURE DESIGN OF PIPING COMPONENTS

K303 GENERAL

Components manufactured in accordance with standards listed in Table K326.1 shall be considered suitable for use at pressure–temperature ratings in accordance with para. K302.2.

K304 PRESSURE DESIGN OF HIGH PRESSURE COMPONENTS

K304.1 Straight Pipe

K304.1.1 General

(a) The required wall thickness of straight sections of pipe shall be determined in accordance with eq. (33).

$$t_m = t + c \tag{33}$$

The minimum wall thickness, T, for the pipe selected, considering manufacturer's minus tolerance, shall be not less than t_m.

(b) The following nomenclature is used in the equation for pressure design of straight pipe:

$c = c_i + c_o$

= the sum of mechanical allowances[2] (thread or groove depth) plus corrosion and erosion allowances (where c_i = the sum of *internal* allowances and c_o = the sum of *external* allowances). For threaded components, the nominal thread depth (dimension h of ASME B1.20.1 or equivalent) shall apply, except that for straight threaded connections, the external thread groove depth need not be considered provided

(a) it does not exceed 20% of the wall thickness;

(b) the ratio of outside to inside diameter, D/d, is greater than 1.1;

(c) the internally threaded attachment provides adequate reinforcement; and

[2] For machined surfaces or grooves where the tolerance is not specified, the tolerance shall be assumed to be 0.5 mm (0.02 in.) in addition to the specified depth of the cut.

Copyright © 2015 by the American Society of Mechanical Engineers.
No reproduction may be made of this material without written consent of ASME.

(d) the thread plus the undercut area, if any, does not extend beyond the reinforcement for a distance more than the nominal wall thickness of the pipe.

t = pressure design wall thickness, as calculated in para. K304.1.2 for internal pressure, or in accordance with the procedure listed in para. K304.1.3 for external pressure

t_m = minimum required wall thickness, including mechanical, corrosion, and erosion allowances

Adequate reinforcement by the attachment is defined as that necessary to ensure that the static burst pressure of the connection will equal or exceed that of the unthreaded portion of the pipe. The adequacy of the reinforcement shall be substantiated as required by para. K304.7.2.

K304.1.2 Straight Pipe Under Internal Pressure

(a) Except as provided in (b) below for solution heat treated austenitic stainless steels and certain nickel alloys with similar stress–strain behavior, the internal pressure design wall thickness, t, shall be not less than that calculated in accordance with eq. (34a) for pipe with a specified outside diameter and minimum wall thickness, or eq. (34b) for pipe with a specified inside diameter and minimum wall thickness.

$$t = \frac{D - 2c_o}{2}\left[1 - \exp\left(\frac{-P}{S}\right)\right] \qquad (34a)^{3, 4, 5}$$

or

$$t = \frac{d + 2c_i}{2}\left[\exp\left(\frac{P}{S}\right) - 1\right] \qquad (34b)^{3, 4, 5}$$

Alternatively, the internal design gage pressure, P, may be calculated by eq. (35a) or (35b).

$$P = S \times \ln\left[\frac{D - 2c_o}{D - 2(T - c_i)}\right] \qquad (35a)^{4, 5}$$

or

$$P = S \times \ln\left[\frac{d + 2(T - c_o)}{d + 2c_i}\right] \qquad (35b)^{4, 5}$$

where

D = outside diameter of pipe. For design calculations in accordance with this Chapter, the outside diameter of the pipe is the maximum value allowable under the specifications.

d = inside diameter of pipe. For design calculations in accordance with this Chapter, the inside diameter of the pipe is the maximum value allowable under the specifications.

P = internal design gage pressure

S = allowable stress from Table K-1

T = pipe wall thickness (measured or minimum in accordance with the purchase specification)

(b) At design temperatures where allowable stress, S, values in Table K-1 are in **boldface** (solution heat treated austenitic stainless steels and certain nickel alloys with similar stress–strain behavior only), the internal pressure design wall thickness, t, shall be not less than that calculated in accordance with eq. (34c) for pipe with a specified outside diameter and minimum wall thickness, or eq. (34d) for pipe with a specified inside diameter and minimum wall thickness.

$$t = \frac{D - 2c_o}{2}\left[1 - \exp\left(\frac{-1.155P}{S}\right)\right] \qquad (34c)^{4, 5}$$

or

$$t = \frac{d + 2c_i}{2}\left[\exp\left(\frac{1.155P}{S}\right) - 1\right] \qquad (34d)^{4, 5}$$

Alternatively, the internal design gage pressure, P, may be calculated by eq. (35c) or (35d).

$$P = \frac{S}{1.155}\ln\left[\frac{D - 2c_o}{D - 2(T - c_i)}\right] \qquad (35c)^{4, 5}$$

or

$$P = \frac{S}{1.155}\ln\left[\frac{d + 2(T - c_o)}{d + 2c_i}\right] \qquad (35d)^{4, 5}$$

K304.1.3 Straight Pipe Under External Pressure. The pressure design thickness for straight pipe under external pressure shall be determined in accordance with para. K304.1.2 for pipe where $D/t < 3.33$, if at least one end of the pipe is exposed to full external pressure, producing a compressive axial stress. For $D/t \geq 3.33$, and for $D/t < 3.33$ where external pressure is not applied to at least one end of the pipe, the pressure design wall thickness shall be determined in accordance with para. 304.1.3 except that the stress values shall be taken from Table K-1.

K304.2 Curved and Mitered Segments of Pipe

K304.2.1 Pipe Bends. The minimum required wall thickness t_m of a bend, after bending, may be determined as for straight pipe in accordance with para. K304.1, provided that the bend radius of the pipe centerline is

[3] An exponential [e.g., the term exp $(-P/S)$] represents the base of natural logarithms e raised to the stated power (i.e., $-P/S$).

[4] The intent of this equation is to provide a factor of not less than 1.732 (or $\sqrt{3}$) on the pressure required, according to the von Mises theory, to initiate yielding on the outside surface of a cylinder made from an elastic-perfectly plastic material. For solution heat treated austenitic stainless steels and certain nickel alloys with similar stress–strain behavior, this factor is as low as approximately 1.5 at elevated temperatures.

[5] Any mechanical, corrosion, or erosion allowance, c, not specified as internal, c_i, or external, c_o, shall be assumed to be internal, i.e., $c = c_i$ and $c_o = 0$.

Copyright © 2015 by the American Society of Mechanical Engineers.
No reproduction may be made of this material without written consent of ASME.

equal to or greater than ten times the nominal pipe outside diameter and the tolerances and strain limits of para. K332 are met. Otherwise the design shall be qualified as required by para. K304.7.2.

K304.2.2 Elbows. Manufactured elbows not in accordance with para. K303 and pipe bends not in accordance with para. K304.2.1 shall be qualified as required by para. K304.7.2.

K304.2.3 Miter Bends. Miter bends are not permitted.

K304.2.4 Curved Segments of Pipe Under External Pressure. The wall thickness of curved segments of pipe subjected to external pressure may be determined as specified for straight pipe in para. K304.1.3 provided the design length L is the running centerline length between any two sections that are stiffened in accordance with para. 304.1.3.

K304.3 Branch Connections

K304.3.1 General. Acceptable branch connections include a fitting in accordance with para. K303, an extruded outlet in accordance with para. 304.3.4, or a branch connection fitting (see para. 300.2) similar to that shown in Fig. K328.5.4.

K304.3.2 Strength of Branch Connections

(a) The opening made for a branch connection reduces both static and fatigue strength of the run pipe. There shall be sufficient material in the branch connection to contain pressure and meet reinforcement requirements.

(b) Static pressure design of a branch connection not in accordance with para. K303 shall conform to para. 304.3.4 for an extruded outlet or shall be qualified as required by para. K304.7.2.

K304.3.3 Reinforcement of Welded Branch Connections. Branch connections made as provided in para. 304.3.3 are not permitted.

K304.4 Closures

(a) Closures not in accordance with para. K303 or (b) below shall be qualified as required by para. K304.7.2.

(b) Closures may be designed in accordance with the methods, allowable stresses, and temperature limits of the BPV Code, Section VIII, Division 2 or Division 3, and Section II, Part D.

K304.5 Pressure Design of Flanges and Blanks

K304.5.1 Flanges — General

(a) Flanges not in accordance with para. K303 or (b) below shall be qualified as required by para. K304.7.2.

(b) A flange may be designed in accordance with the methods, allowable stresses, and temperature limits of Section VIII, Division 2, Part 4, para. 4.16, or Part 5, or Division 3, Article KD-6, and Section II, Part D.

K304.5.2 Blind Flanges

(a) Blind flanges not in accordance with para. K303 or (b) or (c) below shall be qualified as required by para. K304.7.2.

(b) A blind flange may be designed in accordance with eq. (36). The thickness of the flange selected shall be not less than t_m (see para. K304.1.1 for nomenclature), considering manufacturing tolerance

$$t_m = t + c \tag{36}$$

The methods, allowable stresses, and temperature limits of Section VIII, Division 2, Part 4, para. 4.6 may be used, with the following changes in nomenclature, to calculate t_m:

c = sum of mechanical allowances, defined in para. K304.1.1

t = pressure design thickness as calculated for the given style of blind flange using the appropriate equation of Part 4, para. 4.6

(c) A blind flange may be designed in accordance with the rules, allowable stresses, and temperature limits of Section VIII, Division 3, Article KD-6 and Section II, Part D.

K304.5.3 Blanks. Design of blanks shall be in accordance with para. 304.5.3(b), except that E shall be 1.00 and the definitions of S and c shall be in accordance with para. K304.1.1.

K304.6 Reducers

Reducers not in accordance with para. K303 shall be qualified as required by para. K304.7.2.

K304.7 Pressure Design of Other Components

K304.7.1 Listed Components. Other pressure-containing components manufactured in accordance with standards in Table K326.1 may be utilized in accordance with para. K303.

K304.7.2 Unlisted Components. Pressure design of unlisted components to which the rules elsewhere in para. K304 do not apply shall be based on the pressure design criteria of this Chapter. The designer shall ensure that the pressure design has been substantiated through one or more of the means stated in (a), (b), and (c) below. Note that designs are also required to be checked for adequacy of mechanical strength as described in para. K302.5. **(14)**

(a) extensive, successful service experience under comparable design conditions with similarly proportioned components made of the same or like material.

(b) performance testing sufficient to substantiate both the static pressure design and fatigue life at the intended operating conditions. Static pressure design may be substantiated by demonstrating that failure or excessive

Copyright © 2015 by the American Society of Mechanical Engineers.
No reproduction may be made of this material without written consent of ASME.

plastic deformation does not occur at a pressure equivalent to two times the internal design pressure, *P*. The test pressure shall be two times the design pressure multiplied by the ratio of allowable stress at test temperature to the allowable stress at design temperature, and by the ratio of actual yield strength to the specified minimum yield strength at room temperature from Table K-1.

(c) detailed stress analysis (e.g., finite element method) with results evaluated as described in Section VIII, Division 3, Article KD-2, except that for linear elastic analyses

(1) $S_y/1.5$ in Division 3 shall be replaced by *S* from Table K-1, and

(2) the Division 3 stress intensity limits due to sustained loads may be increased by the same factor applied in para. K302.3.6(a) when wind or earthquake loads are included. However, this limit shall not exceed 90% of S_{yt} listed in the BPV Code, Section II, Part D, Table Y-1.

(d) for (a), (b), and (c) above, interpolations supported by analysis are permitted between sizes, wall thicknesses, and pressure classes, as well as analogies among related materials with supporting material property data. Extrapolation is not permitted.

K304.7.3 Components With Nonmetallic Parts. Except for gaskets and packing, nonmetallic parts are not permitted.

K304.7.4 Bellows Type Expansion Joints. Bellows type expansion joints are not permitted.

K304.8 Fatigue Analysis

(14) **K304.8.1 General.** A fatigue analysis shall be performed on each piping system, including all components[6] and joints therein, and considering the stresses resulting from attachments, to determine its suitability for the cyclic operating conditions[7] specified in the engineering design. Except as permitted in (a) and (b) below, or in paras. K304.8.4 and K304.8.5, this analysis shall be in accordance with the BPV Code, Section VIII, Division 2 or Division 3.[8] The cyclic conditions shall include pressure variations as well as thermal variations or displacement stresses. The requirements of para. K304.8 are in addition to the requirements for a flexibility analysis stated in para. K319. No formal fatigue analysis is required in systems that

(a) are duplicates of successfully operating installations or replacements without significant change of systems with a satisfactory service record or

(b) can readily be judged adequate by comparison with previously analyzed systems

K304.8.2 Amplitude of Alternating Stress

(a) Fatigue Analysis Based Upon Section VIII, Division 2. The value of the alternating stress amplitude for comparison with design fatigue curves shall be determined in accordance with Part 5. The allowable amplitude of alternating stress shall be determined from the applicable design fatigue curve in Part 3, para. 3.15.

(b) Fatigue Analysis Based Upon Section VIII, Division 3

(1) The values of the alternating stress intensity, the associated mean stress, and the equivalent alternating stress intensity shall be determined in accordance with Articles KD-2 and KD-3. The allowable amplitude of the equivalent alternating stress shall be determined from the applicable design fatigue curve in Article KD-3.

(2) If it can be shown that the piping component will fail in a leak-before-burst mode, the number of design cycles (design fatigue life) may be calculated in accordance with either Article KD-3 or Article KD-4. If a leak-before-burst mode of failure cannot be shown, the fracture mechanics evaluation outlined in Article KD-4 shall be used to determine the number of design cycles of the component.

(c) Additional Considerations. The designer is cautioned that the considerations listed in para. K302.1 may reduce the fatigue life of the component below the value predicted by para. (a) or (b) above.

K304.8.3 Pressure Stress Evaluation for Fatigue Analysis

(a) For fatigue analysis of straight pipe, eq. (37) may be used to calculate the stress intensity[9] at the inside surface due only to internal pressure.

$$S = \frac{PD^2}{2(T - c)\left[D - (T - c)\right]} \tag{37}$$

(b) For fatigue analysis of curved pipe, eq. (37) may be used, with the dimensions of the straight pipe from which it was formed, to calculate the maximum stress intensity at the inside surface due only to internal pressure, provided that the centerline bend radius is not less than ten times the nominal outside diameter of the pipe, and that the tolerance and strain limits of para. K332 are met. Bends of smaller radius shall be qualified as required by para. K304.7.2.

(c) If the value of *S* calculated by eq. (37) exceeds three times the allowable stress from Table K-1 at the average temperature during the loading cycle, an inelastic analysis is required.

K304.8.4 Fatigue Evaluation by Test. With the owner's approval, the design fatigue life of a component may be established by destructive testing in accordance

[6] Bore imperfections may reduce fatigue life.

[7] If the range of temperature change varies, equivalent full temperature cycles *N* may be computed as provided in footnote 5 to para. 302.3.5.

[8] Fatigue analysis in accordance with Section VIII, Division 2 or Division 3, requires that stress concentration factors be used in computing the cyclic stresses.

[9] The term *stress intensity* is defined in Section VIII, Division 3.

Copyright © 2015 by the American Society of Mechanical Engineers.
No reproduction may be made of this material without written consent of ASME.

Table K305.1.2 Required Ultrasonic or Eddy Current Examination of Pipe and Tubing for Longitudinal Defects

Diameter, mm (in.)	Examination Required	Paragraph Reference
$d < 3.2$ ($1/8$) or $D < 6.4$ ($1/4$)	None	. . .
3.2 ($1/8$) $\leq d \leq 17.5$ ($11/16$) and 6.4 ($1/4$) $\leq D \leq 25.4$ (1)	Eddy current (ET) [Note (1)] or ultrasonic (UT)	K344.8 or K344.6
$d > 17.5$ ($11/16$) or $D > 25.4$ (1)	Ultrasonic (UT)	K344.6

NOTE:
(1) This examination is limited to cold drawn austenitic stainless steel pipe and tubing.

with para. K304.7.2 in lieu of the above analysis requirements.

K304.8.5 Extended Fatigue Life. The design fatigue life of piping components may be extended beyond that determined by Section VIII, Division 2, Part 3, para. 3.15 and Part 5; or Division 3, Article KD-3; as applicable, by the use of one of the following methods, provided that the component is qualified in accordance with para. K304.7.2:

(a) surface treatments, such as improved surface finish

(b) prestressing methods, such as autofrettage, shot peening, or shrink fit

The designer is cautioned that the benefits of prestress may be reduced due to thermal, strain softening, or other effects.

PART 3
FLUID SERVICE REQUIREMENTS FOR PIPING COMPONENTS

K305 PIPE

Pipe includes components designated as "tube" or "tubing" in the material specification, when intended for pressure service.

K305.1 Requirements

K305.1.1 General. Pipe and tubing shall be either seamless or longitudinally welded with straight seam and a joint quality factor $E_j = 1.00$, examined in accordance with Note (2) of Table K341.3.2. Spiral (helical seam) welds are not permitted.

K305.1.2 Additional Examination. Pipe and tubing shall have passed a 100% examination for longitudinal defects in accordance with Table K305.1.2. This examination is in addition to acceptance tests required by the material specification.

K305.1.3 Heat Treatment. Heat treatment, if required, shall be in accordance with para. K331.

K305.1.4 Unlisted Pipe and Tubing. Unlisted pipe and tubing may be used only in accordance with para. K302.2.3.

K306 FITTINGS, BENDS, AND BRANCH CONNECTIONS

Pipe and other materials used in fittings, bends, and branch connections shall be suitable for the manufacturing or fabrication process and otherwise suitable for the service.

K306.1 Pipe Fittings

K306.1.1 General. All castings shall have a casting quality factor $E_c = 1.00$, with examination and acceptance criteria in accordance with para. K302.3.3. All welds shall have a weld quality factor $E_j = 1.00$, with examination and acceptance criteria in accordance with paras. K341 through K344. Spiral (helical seam) welds are not permitted. Listed fittings may be used in accordance with para. K303. Unlisted fittings may be used only in accordance with para. K302.2.3.

K306.1.2 Specific Fittings

(a) Socket welding fittings are not permitted.

(b) Threaded fittings are permitted only in accordance with para. K314.

(c) Branch connection fittings (see para. 300.2) whose design has been performance tested successfully as required by para. K304.7.2(b) may be used within their established ratings.

K306.2 Pipe Bends

K306.2.1 General. A bend made in accordance with para. K332.2 and verified for pressure design in accordance with para. K304.2.1 shall be suitable for the same service as the pipe from which it is made.

K306.2.2 Corrugated and Other Bends. Bends of other design (such as creased or corrugated) are not permitted.

K306.3 Miter Bends

Miter bends are not permitted.

K306.4 Fabricated or Flared Laps

Only forged laps are permitted.

K306.5 Fabricated Branch Connections

Fabricated branch connections constructed by welding shall be fabricated in accordance with para. K328.5.4 and examined in accordance with para. K341.4.

Copyright © 2015 by the American Society of Mechanical Engineers.
No reproduction may be made of this material without written consent of ASME.

K307 VALVES AND SPECIALTY COMPONENTS

The following requirements for valves shall also be met, as applicable, by other pressure-containing piping components, such as traps, strainers, and separators.

K307.1 General

Pressure design of unlisted valves shall be qualified as required by para. K304.7.2.

K308 FLANGES, BLANKS, FLANGE FACINGS, AND GASKETS

K308.1 General

Pressure design of unlisted flanges shall be verified in accordance with para. K304.5.1 or qualified as required by para. K304.7.2.

K308.2 Specific Flanges

K308.2.1 Threaded Flanges. Threaded flanges may be used only within the limitations on threaded joints in para. K314.

K308.2.2 Other Flange Types. Slip-on, socket welding, and expanded joint flanges, and flanges for flared laps, are not permitted.

K308.3 Flange Facings

The flange facing shall be suitable for the service and for the gasket and bolting employed.

K308.4 Gaskets

Gaskets shall be selected so that the required seating load is compatible with the flange rating and facing, the strength of the flange, and its bolting. Materials shall be suitable for the service conditions. Mode of gasket failure shall be considered in gasket selection and joint design.

K308.5 Blanks

Blanks shall have a marking, identifying material, pressure–temperature rating, and size, that is visible after installation.

K309 BOLTING

Bolting, including bolts, bolt studs, studs, cap screws, nuts, and washers, shall meet the requirements of the BPV Code, Section VIII, Division 2, Part 3, para. 3.7; Part 4, para. 4.16; and Part 5, para. 5.7. See also Appendix F, para. F309, of this Code.

PART 4
FLUID SERVICE REQUIREMENTS FOR PIPING JOINTS

K310 GENERAL

Joints shall be suitable for the fluid handled, and for the pressure–temperature and other mechanical loadings expected in service.

Factors such as assembly and disassembly (if applicable), cyclic loading, vibration, shock, bending, and thermal expansion and contraction of joints shall be considered in the engineering design.

K311 WELDED JOINTS

K311.1 General

Welds shall conform to the following:

(a) Welding shall be in accordance with para. K328.

(b) Preheating and heat treatment shall be in accordance with paras. K330 and K331, respectively.

(c) Examination shall be in accordance with para. K341.4, with acceptance criteria as shown in Table K341.3.2.

K311.2 Specific Requirements

K311.2.1 Backing Rings and Consumable Inserts. Backing rings shall not be used. Consumable inserts shall not be used in butt welded joints except when specified by the engineering design.

K311.2.2 Fillet Welds. Fillet welds may be used only for structural attachments in accordance with the requirements of paras. K321 and K328.5.2.

K311.2.3 Other Weld Types. Socket welds and seal welds are not permitted.

K312 FLANGED JOINTS

Flanged joints shall be selected for leak tightness, considering the requirements of para. K308, flange facing finish, and method of attachment. See also para. F312.

K312.1 Joints Using Flanges of Different Ratings

Paragraph 312.1 applies.

K313 EXPANDED JOINTS

Expanded joints are not permitted.

K314 THREADED JOINTS

K314.1 General

Except as provided in paras. K314.2 and K314.3, threaded joints are not permitted.

(a) Layout of piping shall be such as to minimize strain on threaded joints that could adversely affect sealing.

(b) Supports shall be designed to control or minimize strain and vibration on threaded joints and seals.

K314.2 Taper-Threaded Joints

(a) Taper-threaded joints shall be used only for instrumentation, vents, drains, and similar purposes, and shall be not larger than DN 15 (NPS ½).

Copyright © 2015 by the American Society of Mechanical Engineers.
No reproduction may be made of this material without written consent of ASME.

(b) External-threaded components shall be at least Schedule 160 in nominal wall thickness. The nominal thickness of Schedule 160 piping is listed in ASME B36.10M for DN 15 (NPS ½) and in ASME B16.11 for sizes smaller than DN 15 (NPS ½).

K314.3 Straight-Threaded Joints

K314.3.1 Joints With Seal Formed by Projecting Pipe. Threaded joints where the threads are used to attach flanges or fittings, and in which the pipe end projects through the flange or fitting and is machined to form the sealing surface with a lens ring, cone ring, the mating pipe end, or other similar sealing device, may be used. Such joints shall be qualified in accordance with para. K304.7.2(a) or (b).

K314.3.2 Other Straight-Threaded Joints

(a) Other Joints Using Components Conforming to Listed Standards. Joints made up using straight-threaded fittings covered by standards listed in Table K326.1 may be used, provided the fittings and joints are suitable for the pipe with which they are to be used (considering piping tolerances and other characteristics), are used within the pressure–temperature limitations of the fitting, and comply with para. K302.2.1.

(b) Other Joints Using Components Not Conforming to Listed Standards. Other straight-threaded joints (e.g., a union comprising external and internal ends joined with a threaded union nut, or other constructions shown typically in Fig. 335.3.3) may be used. Such joints shall be qualified by performance testing in accordance with para. K304.7.2(b). Testing shall be conducted for each material type/grade and heat treatment condition, component configuration (e.g., elbow), size (e.g., NPS), and pressure rating. Performance testing of joints in which the process of making up the joint involves significant uncontrolled loads (e.g., hammer unions) shall include testing designed to simulate actual loads.

K315 TUBING JOINTS

K315.1 Flared Type Joints

Joints of the flared type are not permitted.

K315.2 Flareless Joints Using Components Conforming to Listed Standards

Joints made up using flareless type fittings covered by listed standards in Table K326.1 may be used, provided that the fittings

(a) do not rely on friction to carry loads from the tubing to the fitting

(b) are suitable for the tubing or pipe with which they are to be used (considering piping tolerances and other characteristics)

(c) are used within the pressure–temperature limitations of the fitting and the joint

(d) comply with para. K302.2.1

K315.3 Flareless Joints Using Components Not Conforming to Listed Standards

Joints made up using flareless type fittings not listed in Table K326.1 may be used, provided that the type of fitting selected is adequate for the design pressure, other loadings, and the design temperature, and does not rely on friction to restrain the axial load. The design shall also be qualified by performance testing in accordance with para. K304.7.2(b). Testing shall be conducted for each material type/grade and heat treatment condition, component configuration (e.g., elbow), size (e.g., NPS), and pressure rating.

K316 CAULKED JOINTS

Caulked joints are not permitted.

K317 SOLDERED AND BRAZED JOINTS

K317.1 Soldered Joints

Soldered joints are not permitted.

K317.2 Brazed Joints

(a) Braze welded joints and fillet joints made with brazing filler metal are not permitted.

(b) Brazed joints shall be made in accordance with para. K333 and shall be qualified as required by para. K304.7.2. Such application is the owner's responsibility. The melting point of brazing alloys shall be considered when exposure to fire is possible.

K318 SPECIAL JOINTS

Special joints include coupling, mechanical, and gland nut and collar types of joints.

K318.1 General

Joints may be used in accordance with para. 318.2 and the requirements for materials and components in this Chapter.

K318.2 Specific Requirements

K318.2.1 Prototype Tests. A prototype joint shall have been subjected to performance tests in accordance with para. K304.7.2(b) to determine the safety of the joint under test conditions simulating all expected service conditions. Testing shall include cyclic simulation.

K318.2.2 Prohibited Joints. Bell type and adhesive joints are not permitted.

PART 5
FLEXIBILITY AND SUPPORT

K319 FLEXIBILITY

Flexibility analysis shall be performed for each piping system. Paragraphs 319.1 through 319.7 apply, except

Copyright © 2015 by the American Society of Mechanical Engineers.
No reproduction may be made of this material without written consent of ASME.

for paras. 319.4.1(c) and 319.4.5. The computed displacement stress range shall be within the allowable displacement stress range in para. K302.3.5 and shall also be included in the fatigue analysis in accordance with para. K304.8.

K321 PIPING SUPPORT

Piping supports and methods of attachment shall be in accordance with para. 321 except as modified below, and shall be detailed in the engineering design.

K321.1 General

K321.1.1 Objectives. Paragraph 321.1.1 applies, but substitute "Chapter" for "Code" in (a).

K321.1.4 Materials. Paragraph 321.1.4 applies, but replace (e) with the following:

(e) Attachments welded to the piping shall be of a material compatible with the piping and the service. Other requirements are specified in paras. K321.3.2 and K323.4.2(b).

K321.3 Structural Attachments

K321.3.2 Integral Attachments. Paragraph 321.3.2 applies, but substitute "K321.1.4(e)" for "321.1.4(e)" and "Chapter IX" for "Chapter V."

PART 6
SYSTEMS

K322 SPECIFIC PIPING SYSTEMS

K322.3 Instrument Piping

K322.3.1 Definition. Instrument piping within the scope of this Chapter includes all piping and piping components used to connect instruments to high pressure piping or equipment. Instruments, permanently sealed fluid-filled tubing systems furnished with instruments as temperature- or pressure-responsive devices, and control piping for air or hydraulically operated control apparatus (not connected directly to the high pressure piping or equipment) are not within the scope of this Chapter.

K322.3.2 Requirements. Instrument piping within the scope of this Chapter shall be in accordance with para. 322.3.2 except that the design pressure and temperature shall be determined in accordance with para. K301, and the requirements of para. K310 shall apply. Instruments, and control piping not within the scope of this Chapter, shall be designed in accordance with para. 322.3.

K322.6 Pressure-Relieving Systems

Paragraph 322.6 applies, except for para. 322.6.3.

K322.6.3 Overpressure Protection. Overpressure protection for high pressure piping systems shall conform to the following:

(a) The cumulative capacity of the pressure-relieving devices shall be sufficient to prevent the pressure from rising more than 10% above the piping design pressure at the operating temperature during the relieving condition for a single relieving device or more than 16% above the design pressure when more than one device is provided, except as provided in (c) below.

(b) System protection must include one relief device set at or below the design pressure at the operating temperature for the relieving condition, with no device set to operate at a pressure greater than 105% of the design pressure, except as provided in (c) below.

(c) Supplementary pressure-relieving devices provided for protection against overpressure due to fire or other unexpected sources of external heat shall be set to operate at a pressure not greater than 110% of the design pressure of the piping system and shall be capable of limiting the maximum pressure during relief to no more than 121% of the design pressure.

PART 7
MATERIALS

K323 GENERAL REQUIREMENTS

(a) Paragraph K323 states limitations and required qualifications for materials based on their inherent properties. Their use is also subject to requirements elsewhere in Chapter IX and in Table K-1.

(b) Specific attention should be given to the manufacturing process to ensure uniformity of properties throughout each piping component.

(c) See para. K321.1.4 for support materials.

K323.1 Materials and Specifications

K323.1.1 Listed Materials

(a) Any material used in a pressure-containing piping component shall conform to a listed specification, except as provided in (b) below or in para. K323.1.2.

(b) Materials manufactured to specification editions different from those listed in Appendix E may be used, provided

(1) the requirements for chemical composition and heat-treatment condition in the edition of the specification to which the material was manufactured meet the requirements of the listed edition

(2) the specified minimum tensile and yield strengths, and, if applicable, the specified maximum tensile and yield strengths, required by the two editions of the specification are the same, and

Copyright © 2015 by the American Society of Mechanical Engineers.
No reproduction may be made of this material without written consent of ASME.

(3) the material has been tested and examined in accordance with the requirements of the listed edition of the specification

A material that does not meet the requirements of paras. K323.1.1(b)(1), (2), and (3) may be evaluated as an unlisted material in accordance with para. K323.1.2.

K323.1.2 Unlisted Materials. An unlisted material may be used, provided it conforms to a published specification covering chemistry, physical and mechanical properties, method and process of manufacture, heat treatment, and quality control, and otherwise meets the requirements of this Chapter. Allowable stresses shall be determined in accordance with the applicable allowable stress basis of this Chapter or a more conservative basis.

K323.1.3 Unknown Materials. Materials of unknown specification, type, or grade are not permitted.

K323.1.4 Reclaimed Materials. Reclaimed pipe and other piping components may be used provided they are properly identified as conforming to a listed specification, have documented service history for the material and fatigue life evaluation, and otherwise meet the requirements of this Chapter. Sufficient cleaning and inspection shall be made to determine minimum wall thickness and freedom from defects that would be unacceptable in the intended service.

K323.1.5 Product Analysis. Conformance of materials to the product analysis chemical requirements of the applicable specification shall be verified, and certification shall be supplied. Requirements for product analysis are defined in the applicable materials specification.

K323.1.6 Repair of Materials by Welding. A material defect may be repaired by welding, provided that all of the following criteria are met:

(a) The material specification provides for weld repair.

(b) The welding procedure and welders or welding operators are qualified as required by para. K328.2.

(c) The repair and its examination are performed in accordance with the material specification and with the owner's approval.

K323.2 Temperature Limitations

The designer shall verify that materials that meet other requirements of this Chapter are suitable for service throughout the operating temperature range. Attention is directed to Note (4) in Appendix K, and para. K323.2.1 following.

(14) **K323.2.1 Upper Temperature Limits, Listed Materials.** A listed material shall not be used at a temperature above the maximum for which a stress value is shown in Appendix K, Table K-1, except as provided in Note (9) of that table.

K323.2.2 Lower Temperature Limits, Listed Materials

(a) The lowest permitted service temperature for a component or weld shall be the impact test temperature determined in accordance with para. K323.3.4(a), except as provided in (b) or (c) below.

(b) For a component or weld subjected to a longitudinal or circumferential stress ≤ 41 MPa (6 ksi), the lowest service temperature shall be the lower of −46°C (−50°F) or the impact test temperature determined in para. K323.3.4(a).

(c) For materials exempted from Charpy testing by Note (6) of Table K323.3.1, the service temperature shall not be lower than −46°C (−50°F).

K323.2.3 Temperature Limits, Unlisted Materials. (14) An unlisted material acceptable under para. K323.1.2 shall be qualified for service at all temperatures within a stated range from design minimum temperature to design (maximum) temperature, in accordance with para. K323.2.4. However, the upper temperature limit shall be less than the temperature for which an allowable stress, determined in accordance with para. 302.3.2, is governed by the creep or stress rupture provisions of that paragraph.

K323.2.4 Verification of Serviceability (14)

(a) When an unlisted material is used, or when otherwise required by Appendix K, Table K-1, Note (9), the designer is responsible for demonstrating the validity of the allowable stresses and other design limits, and of the approach taken in using the material, including the derivation of stress data and the establishment of temperature limits.

(b) Paragraph 323.2.4(b) applies except that allowable stress values shall be determined in accordance with para. K302.3.

K323.3 Impact Testing Methods and Acceptance Criteria

K323.3.1 General. Except as provided in Table K323.3.1, Note (6), piping components used in High Pressure Fluid Service shall be subjected to Charpy V-notch impact testing. The testing shall be performed in accordance with Table K323.3.1 on representative samples using the testing methods described in paras. K323.3.2, K323.3.3, and K323.3.4. Acceptance criteria are described in para. K323.3.5.

K323.3.2 Procedure. Paragraph 323.3.2 applies.

K323.3.3 Test Specimens

(a) Each set of impact test specimens shall consist of three specimen bars. Impact tests shall be made using standard 10 mm (0.394 in.) square cross section Charpy V-notch specimen bars oriented in the transverse direction.

(b) Where component size and/or shape does not permit specimens as specified in (a) above, standard 10 mm

Copyright © 2015 by the American Society of Mechanical Engineers.
No reproduction may be made of this material without written consent of ASME.

Table K323.3.1 Impact Testing Requirements

Test Characteristics		Column A Pipe, Tubes, and Components Made From Pipe or Tubes	Column B Other Components, Fittings, Etc.	Column C Bolts
Tests on Materials	Number of tests	As required by the material specification, or one test set per lot [see Note (1)], whichever is greater, except as permitted by Note (2).		
	Location and orientation of specimens [see Note (3)]	(a) Transverse to the longitudinal axis, with notch parallel to axis. [See Note (4).] (b) Where component size and/or shape does not permit specimens as specified in (a) above, paras. K323.3.3(b), (c), and (d) apply as needed.	(a) Transverse to the direction of maximum elongation during rolling or to direction of major working during forging. Notch shall be oriented parallel to direction of maximum elongation or major working. (b) If there is no single identifiable axis, e.g., for castings or triaxial forgings, specimens shall either meet the longitudinal values of Table K323.3.5, or three sets of orthogonal specimens shall be prepared, and the lowest impact values obtained from any set shall meet the transverse values of Table K323.3.5. (c) Where component size and/or shape does not permit specimens as specified in (a) or (b) above, paras. K323.3.3(c) and (d) apply as needed.	(a) Bolts ≤ 52 mm (2 in.) nominal size made in accordance with ASTM A 320 shall meet the impact requirements of that specification. (b) For all other bolts, longitudinal specimens shall be taken. The impact values obtained shall meet the transverse values of Table K323.3.5.
Tests on Welds in Fabrication or Assembly	Test pieces [see Note (5)]	Test pieces for preparation of impact specimens shall be made for each welding procedure, type of electrode, or filler metal (i.e., AWS E-XXXX classification) and each flux to be used. All test pieces shall be subject to heat treatment, including cooling rates and aggregate time at temperature or temperatures, essentially the same as the heat treatment which the finished component will have received.		
	Number of test pieces [see Note (6)]	(1) One test piece with a thickness T for each range of material thicknesses which can vary from $\frac{1}{2}T$ to T + 6 mm ($\frac{1}{4}$ in.). (2) Unless otherwise specified in this Chapter [see Note (4)] or the engineering design, test pieces need not be made from individual material lots, or from material for each job, provided welds in other certified material of the same thickness ranges and to the same specification (type and grade, not heat or lot) have been tested as required and the records of those tests are made available.		
	Location and orientation of specimens	(1) Weld metal impact specimens shall be taken across the weld with the notch in the weld metal. Each specimen shall be oriented so that the notch axis is normal to the surface of the material and one face of the specimen shall be within 1.5 mm ($\frac{1}{16}$ in.) of the surface of the material. (2) Heat affected zone impact specimens shall be taken across the weld and have sufficient length to locate the notch in the heat affected zone, after etching. The notch shall be cut approximately normal to the material surface in such a manner as to include as much heat affected zone material as possible in the resulting fracture. (3) The impact values obtained from both the weld metal and heat affected zone specimens shall be compared to the transverse values in Table K323.3.5 for the determination of acceptance criteria.		

Copyright © 2015 by the American Society of Mechanical Engineers.
No reproduction may be made of this material without written consent of ASME.

Table K323.3.1 Impact Testing Requirements (Cont'd)

NOTES:
(1) A lot shall consist of pipe or components of the same nominal size, made from the same heat of material, and heat treated together. If a continuous type furnace is used, pipe or components may be considered to have been heat treated together if they are processed during a single continuous time period at the same furnace conditions.
(2) Impact tests are not required when the maximum obtainable longitudinal Charpy specimen has a width along the notch less than 2.5 mm (0.098 in.). See para. K323.2.2(c).
(3) Impact tests shall be performed on a representative sample of material after completion of all heat treatment and forming operations involving plastic deformation, except that cold bends made in accordance with para. K304.2.1 need not be tested after bending.
(4) For longitudinally welded pipe, specimens shall be taken from the base metal, weld metal, and the heat affected zone.
(5) For welds in the fabrication or assembly of piping or components, including repair welds.
(6) The test piece shall be large enough to permit preparing the number of specimens required by para. K323.3. If this is not possible, additional test pieces shall be prepared.

Fig. K323.3.3 Example of an Acceptable Impact Test Specimen

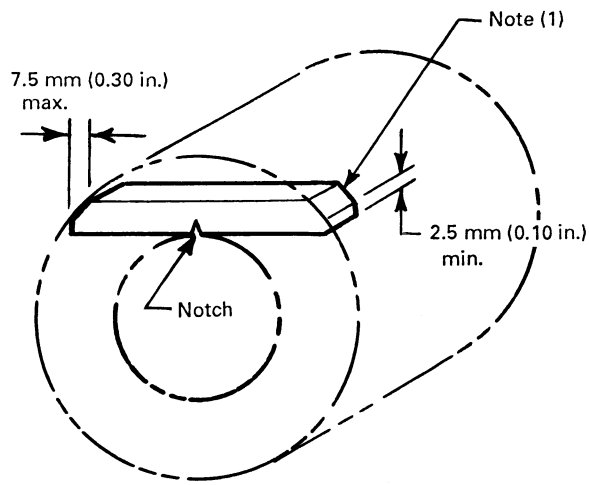

GENERAL NOTE: This Figure illustrates how an acceptable transverse Charpy specimen can be obtained from a tubing or component shape too small for a full length standard specimen in accordance with ASTM A370. The corners of a longitudinal specimen parallel to and on the side opposite the notch may be as shown.

NOTE:
(1) Corners of the Charpy specimen [see para. K323.3.3(d)] may follow the contour of the component within the dimension limits shown.

square cross-section longitudinal Charpy specimens may be prepared.

(c) Where component size and/or shape does not permit specimens as specified in (a) or (b) above, subsize longitudinal Charpy specimens may be prepared. Test temperature shall be reduced in accordance with Table 323.3.4. See also Table K323.3.1, Note (6).

(d) If necessary in (a), (b), or (c) above, corners of specimens parallel to and on the side opposite the notch may be as shown in Fig. K323.3.3.

K323.3.4 Test Temperatures. For all Charpy impact tests, the test temperature criteria in (a) or (b) below shall be observed.

(a) Charpy impact tests shall be conducted at a temperature no higher than the lower of the following:

(1) 20°C (70°F)

(2) the lowest metal temperature at which a piping component or weld will be subjected to a stress greater than 41 MPa (6 ksi). In specifying the lowest metal temperature, the following shall be considered:

(a) range of operating conditions

(b) upset conditions

(c) ambient temperature extremes

(d) required leak test temperature

(b) Where the largest possible test specimen has a width along the notch less than the lesser of 80% of the

Copyright © 2015 by the American Society of Mechanical Engineers.
No reproduction may be made of this material without written consent of ASME.

Table K323.3.5 Minimum Required Charpy V-Notch Impact Values

Specimen Orientation	Pipe Wall or Component Thickness, mm (in.)	No. of Specimens [Note (1)]	Energy, J (ft-lbf) [Note (2)] Specified Minimum Yield Strength, MPa (ksi) ≤ 932 (≤ 135)	> 932 (> 135)
Transverse	≤ 25 (≤ 1)	Average for 3	27 (20)	34 (25)
		Minimum for 1	20 (15)	27 (20)
	> 25 and ≤ 51 (> 1 and ≤ 2)	Average for 3	34 (25)	41 (30)
		Minimum for 1	27 (20)	33 (24)
	> 51 (> 2)	Average for 3	41 (30)	47 (35)
		Minimum for 1	33 (24)	38 (28)
Longitudinal	≤ 25 (≤ 1)	Average for 3	54 (40)	68 (50)
		Minimum for 1	41 (30)	54 (40)
	> 25 and ≤ 51 (> 1 and ≤ 2)	Average for 3	68 (50)	81 (60)
		Minimum for 1	54 (40)	65 (48)
	> 51 (> 2)	Average for 3	81 (60)	95 (70)
		Minimum for 1	65 (48)	76 (56)

NOTES:
(1) See para. K323.3.5(c) for permissible retests.
(2) Energy values in this Table are for standard size specimens. For subsize specimens, these values shall be multiplied by the ratio of the actual specimen width to that of a full-size specimen, 10 mm (0.394 in.).

material thickness or 8 mm (0.315 in.), the test shall be conducted at a reduced temperature in accordance with Table 323.3.4, considering the temperature as reduced below the test temperature required by (a) above.

K323.3.5 Acceptance Criteria

(a) Minimum Energy Requirements for Materials Other Than Bolting. The applicable minimum impact energy requirements for materials shall be those shown in Table K323.3.5. Lateral expansion shall be measured in accordance with ASTM A370 (for title see para. 323.3.2). The results shall be included in the impact test report.

(b) Minimum Energy Requirements for Bolting Materials. The applicable minimum energy requirements shall be those shown in Table K323.3.5 except as provided in Table K323.3.1.

(c) Weld Impact Test Requirements. Where two base metals having different required impact energy values are joined by welding, the impact test energy requirements shall equal or exceed the requirements of the base material having the lower required impact energy.

(d) Retests

(1) Retest for Absorbed Energy Criteria. When the average value of the three specimens equals or exceeds the minimum value permitted for a single specimen, and the value for more than one specimen is below the required average value, or when the value for one specimen is below the minimum value permitted for a single specimen, a retest of three additional specimens shall be made. The value for each of these retest specimens shall equal or exceed the required average value.

(2) Retest for Erratic Test Results. When an erratic result is caused by a defective specimen or uncertainty in the test, a retest will be allowed. The report giving test results shall specifically state why the original specimen was considered defective or which step of the test procedure was carried out incorrectly.

K323.4 Requirements for Materials

K323.4.1 General. Requirements in para. K323.4 apply to pressure-containing parts, not to materials used as supports, gaskets, packing, or bolting. See also Appendix F, para. F323.4.

K323.4.2 Specific Requirements

(a) Ductile iron and other cast irons are not permitted.

(b) Zinc-coated materials are not permitted for pressure containing components and may not be attached to pressure-containing components by welding.

K323.4.3 Metallic Clad and Lined Materials. Materials with metallic cladding or lining may be used in accordance with the following provisions:

(a) For metallic clad or lined piping components, the base metal shall be an acceptable material as defined in para. K323, and the thickness used in pressure design

Copyright © 2015 by the American Society of Mechanical Engineers.
No reproduction may be made of this material without written consent of ASME.

in accordance with para. K304 shall not include the thickness of the cladding or lining. The allowable stress used shall be that for the base metal at the design temperature. For such components, the cladding or lining may be any material that, in the judgment of the user, is suitable for the intended service and for the method of manufacture and assembly of the piping component.

(b) Fabrication by welding of clad or lined piping components and the inspection and testing of such components shall be done in accordance with applicable provisions of the BPV Code, Section VIII, Division 1, UCL-30 through UCL-52, and the provisions of this Chapter.

(c) If a metallic liner also serves as a gasket or as part of the flange facing, the requirements and limitations in para. K308.4 apply.

K323.5 Deterioration of Materials in Service

Paragraph 323.5 applies.

K325 MISCELLANEOUS MATERIALS

Paragraph 325 applies.

PART 8
STANDARDS FOR PIPING COMPONENTS

K326 REQUIREMENTS FOR COMPONENTS

K326.1 Dimensional Requirements

K326.1.1 Listed Piping Components. Dimensional standards for piping components are listed in Table K326.1. Dimensional requirements contained in specifications listed in Appendix K shall also be considered requirements of this Code.

K326.1.2 Unlisted Piping Components. Piping components not listed in Table K326.1 or Appendix K shall meet the pressure design requirements described in para. K302.2.3 and the mechanical strength requirements described in para. K303.

K326.1.3 Threads. The dimensions of piping connection threads not otherwise covered by a governing component standard or specification shall conform to the requirements of applicable standards listed in Table K326.1 or Appendix K.

K326.2 Ratings of Components

K326.2.1 Listed Components. The pressure–temperature ratings of components listed in Table K326.1 are accepted for pressure design in accordance with para. K303.

K326.2.2 Unlisted Components. The pressure–temperature ratings of unlisted piping components shall conform to the applicable provisions of para. K304.

K326.3 Reference Documents

The documents listed in Table K326.1 contain references to codes, standards, and specifications not listed in Table K326.1. Such unlisted codes, standards, and specifications shall be used only in the context of the listed documents in which they appear.

The design, materials, fabrication, assembly, examination, inspection, and testing requirements of this Chapter are not applicable to components manufactured in accordance with the documents listed in Table K326.1, unless specifically stated in this Chapter or in the listed document.

K326.4 Repair of Piping Components by Welding

A defect in a component listed in Table K326.1 or in an unlisted component in accordance with para. K302.2.3(a) may be repaired by welding, provided that all of the following criteria are met:

(a) The component specification provides for weld repair.

(b) The welding procedure and welders or welding operators are qualified as required by para. K328.2.

(c) The repair and its examination are performed in accordance with the component specification and with the owner's approval.

PART 9
FABRICATION, ASSEMBLY, AND ERECTION

K327 GENERAL

Piping materials and components are prepared for assembly and erection by one or more of the fabrication processes covered in paras. K328, K330, K331, K332, and K333. When any of these processes is used in assembly or erection, requirements are the same as for fabrication.

K328 WELDING

Welding that conforms to the requirements of para. K328 may be used in accordance with para. K311.

K328.1 Welding Responsibility

Each employer is responsible for the welding done by the personnel of his organization and shall conduct the tests required to qualify welding procedures, and to qualify and as necessary requalify welders and welding operators.

K328.2 Welding Qualifications

K328.2.1 Qualification Requirements. Qualification of the welding procedures to be used and of the performance of welders and welding operators shall comply with the requirements of the BPV Code, Section IX, except as modified herein.

(a) Impact tests shall be performed for all procedure qualifications in accordance with para. K323.3.

Copyright © 2015 by the American Society of Mechanical Engineers.
No reproduction may be made of this material without written consent of ASME.

Table K326.1 Component Standards

Standard or Specification	Designation
Bolting	
Square and Hex Bolts and Screws, Inch Series; Including Hex Cap Screws and Lag Screws	ASME B18.2.1
Square and Hex Nuts (Inch Series)	ASME B18.2.2
Metallic Fittings, Valves, and Flanges	
Pipe Flanges and Flanged Fittings [Note (1)]	ASME B16.5
Factory-Made Wrought Steel Buttwelding Fittings [Note (1)]	ASME B16.9
Forged Fittings, Socket Welding and Threaded [Note (1)]	ASME B16.11
Valves—Flanged, Threaded, and Welding End [Note (1)]	ASME B16.34
Line Blanks [Note (1)]	ASME B16.48
Standard Marking System for Valves, Fittings, Flanges, and Unions	MSS SP-25
High Pressure Chemical Industry Flanges and Threaded Stubs for Use with Lens Gaskets	MSS SP-65
Metallic Pipe and Tubes	
Welded and Seamless Wrought Steel Pipe [Note (1)]	ASME B36.10M
Stainless Steel Pipe [Note (1)]	ASME B36.19M
Miscellaneous	
Threading, Gauging, and Thread Inspection of Casing, Tubing, and Line Pipe Threads	API 5B
Unified Inch Screw Threads (UN and UNR Thread Form)	ASME B1.1
Pipe Threads, General Purpose (Inch)	ASME B1.20.1
Metallic Gaskets for Pipe Flanges	ASME B16.20
Buttwelding Ends	ASME B16.25
Surface Texture (Surface Roughness, Waviness, and Lay)	ASME B46.1

GENERAL NOTE: It is not practical to refer to a specific edition of each standard throughout the Code text. Instead, the approved edition references, along with the names and addresses of the sponsoring organizations, are shown in Appendix E.

NOTE:

(1) The use of components made in accordance with these standards is permissible provided they meet all of the requirements of this Chapter.

(b) Test weldments shall be made using the same specification and type or grade of base metal(s), and the same specification and classification of filler metal(s) as will be used in production welding.

(c) Test weldments shall be subjected to essentially the same heat treatment, including cooling rate and cumulative time at temperature, as the production welds.

(d) When tensile specimens are required by Section IX, the yield strength shall also be determined, using the method required for the base metal. The yield strength of each test specimen shall be not less than the specified minimum yield strength at room temperature (S_Y) for the base metals joined. Where two base metals having different S_Y values are joined by welding, the yield strength of each test specimen shall be not less than the lower of the two S_Y values.

(e) Mechanical testing is required for all performance qualification tests.

(f) Qualification on pipe or tubing shall also qualify for plate, but qualification on plate does not qualify for pipe or tubing.

(g) For thickness greater than 51 mm (2 in.), the procedure test coupon shall be at least 75% as thick as the thickest joint to be welded in production.

K328.2.2 Procedure Qualification by Others. Qualification of welding procedures by others is not permitted.

K328.2.3 Performance Qualification by Others. Welding performance qualification by others is not permitted.

K328.2.4 Qualification Records. Paragraph 328.2.4 applies.

K328.3 Materials

K328.3.1 Filler Metal. Filler metal shall be specified in the engineering design and shall conform to the

Copyright © 2015 by the American Society of Mechanical Engineers.
No reproduction may be made of this material without written consent of ASME.

requirements of the BPV Code, Section IX. A filler metal not yet incorporated in Section IX may be used with the owner's approval if a procedure qualification test, including an all-weld-metal test, is first successfully made.

K328.3.2 Weld Backing Material. Backing rings shall not be used.

K328.3.3 Consumable Inserts. Paragraph 328.3.3 applies, except that procedures shall be qualified as required by para. K328.2.

K328.4 Preparation for Welding

K328.4.1 Cleaning. Paragraph 328.4.1 applies.

K328.4.2 End Preparation

(a) General

(1) Butt weld end preparation is acceptable only if the surface is machined or ground to bright metal.

(2) Butt welding end preparation contained in ASME B16.25 or any other end preparation that meets the procedure qualification is acceptable. [For convenience, the basic bevel angles taken from B16.25, with some additional J-bevel angles, are shown in Fig. 328.4.2 sketches (a) and (b).]

(b) Circumferential Welds

(1) If components ends are trimmed as shown in Fig. 328.4.2 sketch (a) or (b) to accommodate consumable inserts, or as shown in Fig. K328.4.3 to correct internal misalignment, such trimming shall not result in a finished wall thickness before welding less than the required minimum wall thickness, t_m.

(2) It is permissible to size pipe ends of the same nominal size to improve alignment, if wall thickness requirements are maintained.

(3) Where necessary, weld metal may be deposited on the inside or outside of the component to permit alignment or provide for machining to ensure satisfactory seating of inserts.

(4) When a butt weld joins sections of unequal wall thickness and the thicker wall is more than 1½ times the thickness of the other, end preparation and geometry shall be in accordance with acceptable designs for unequal wall thickness in ASME B16.5.

K328.4.3 Alignment

(a) Girth Butt Welds

(1) Inside diameters of components at the ends to be joined shall be aligned within the dimensional limits in the welding procedure and the engineering design, except that no more than 1.5 mm (1/16 in.) misalignment is permitted as shown in Fig. K328.4.3.

(2) If the external surfaces of the two components are not aligned, the weld shall be tapered between the two surfaces with a slope not steeper than 1:4.

(b) Longitudinal Butt Joints. Preparation for longitudinal butt welds (not made in accordance with a standard listed in Table K-1 or Table K326.1) shall conform to the requirements of para. K328.4.3(a).

(c) Branch Connection Welds

(1) The dimension *m* in Fig. K328.5.4 shall not exceed ±1.5 mm (1/16 in.).

(2) The dimension *g* in Fig. K328.5.4 shall be specified in the engineering design and the welding procedure.

K328.5 Welding Requirements

K328.5.1 General. The requirements of paras. 328.5.1(b), (d), (e), and (f) apply in addition to the requirements specified below.

(a) All welds, including tack welds, repair welds, and the addition of weld metal for alignment [paras. K328.4.2(b)(3) and K328.4.3(c)(1)], shall be made by qualified welders or welding operators, in accordance with a qualified procedure.

(b) Tack welds at the root of the joint shall be made with filler metal equivalent to that used for the root pass. Tack welds shall be fused with the root pass weld, except that those that have cracked shall be removed. Bridge tacks (above the root) shall be removed.

K328.5.2 Fillet Welds. Fillet welds, where permitted (see para. K311.2.2), shall be fused with and shall merge smoothly into the component surfaces.

K328.5.3 Seal Welds. Seal welds are not permitted.

K328.5.4 Welded Branch Connections. Branch connection fittings (see para. 300.2), attached by smoothly contoured full penetration groove welds of a design that permits 100% interpretable radiographic examination are the only types acceptable.

Figure K328.5.4 shows acceptable details of welded branch connections. The illustrations are typical and are not intended to exclude acceptable types of construction not shown.

K328.5.5 Fabricated Laps. Fabricated laps are not permitted.

K328.6 Weld Repair

Paragraph 328.6 applies, except that procedures and performance shall be qualified as required by para. K328.2.1. See also para. K341.3.3.

K330 PREHEATING

K330.1 General (14)

Paragraph 330.1 applies, except that seal welds are not permitted in this Chapter.

K330.1.1 Requirements. Paragraph 330.1.1 applies.

Copyright © 2015 by the American Society of Mechanical Engineers.
No reproduction may be made of this material without written consent of ASME.

Fig. K328.4.3 Pipe Bored for Alignment: Trimming and Permitted Misalignment

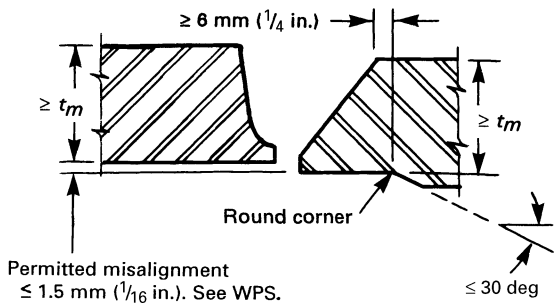

Fig. K328.5.4 Some Acceptable Welded Branch Connections Suitable for 100% Radiography

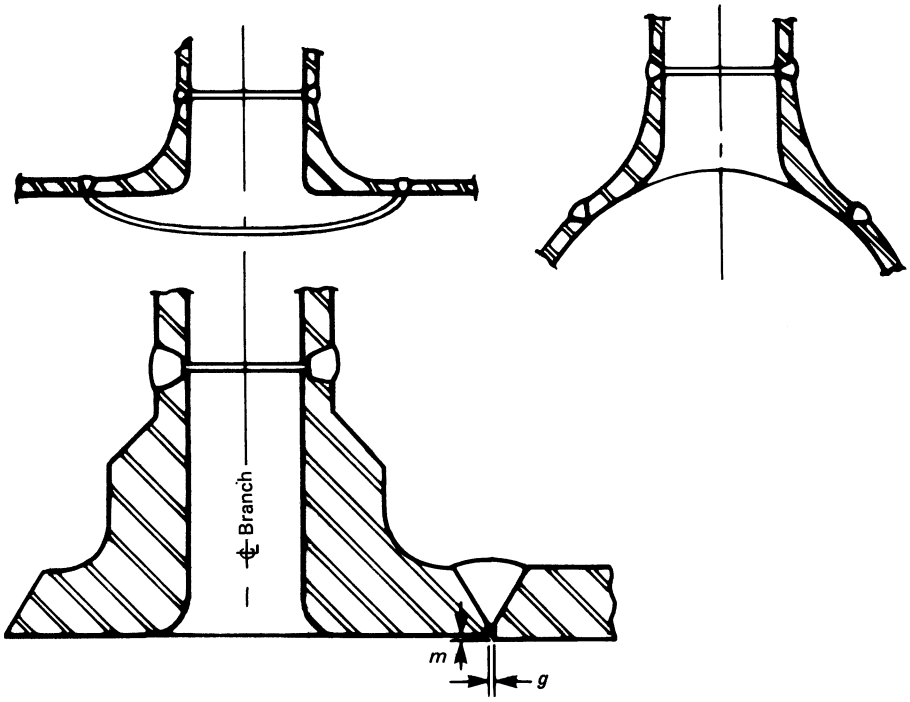

K330.1.2 Unlisted Materials. Paragraph 330.1.2 applies.

K330.1.3 Temperature Verification. Paragraph 330.1.3(a) applies. Temperature-indicating materials and techniques shall not be detrimental to the base metals.

K330.1.4 Preheat Zone. Paragraph 330.1.4 applies.

K330.2 Specific Requirements

Paragraph 330.2 applies in its entirety.

K331 HEAT TREATMENT

The text introducing para. 331 applies.

K331.1 General

K331.1.1 Heat Treatment Requirements. The provisions of para. 331 and Table 331.1.1 apply, except as specified below.

(a) Heat treatment is required for all thicknesses of P-Nos. 4 and 5 materials.

(b) For welds other than longitudinal in quenched and tempered materials, when heat treatment is required by the engineering design, the temperature shall not be higher than 28°C (50°F) below the tempering temperature of the material.

(c) Longitudinal welds in quenched and tempered material shall be heat treated in accordance with the applicable material specification.

Copyright © 2015 by the American Society of Mechanical Engineers.
No reproduction may be made of this material without written consent of ASME.

K331.1.3 Governing Thickness. When components are joined by welding, the thickness to be used in applying the heat treatment provisions of Table 331.1.1 shall be that of the thicker component measured at the joint, except as follows:

In the case of fillet welds used for attachment of external nonpressure parts, such as lugs or other pipe-supporting elements, heat treatment is required when the thickness through the weld and base metal in any plane is more than twice the minimum material thickness requiring heat treatment (even though the thickness of the components at the joint is less than that minimum thickness) except as follows:

(a) not required for P-No. 1 materials when weld throat thickness is 16 mm (5/8 in.) or less, regardless of base metal thickness.

(b) not required for P-Nos. 3, 4, 5, 10A, and 10B materials when weld throat thickness is 6 mm (1/4 in.) or less, regardless of base metal thickness, provided that not less than the recommended minimum preheat is applied and the specified minimum tensile strength of the base metal is less than 490 MPa (71 ksi).

(c) not required for ferritic materials when welds are made with filler metal that does not air harden. Austenitic welding materials may be used for welds to ferritic materials when the effects of service conditions, such as differential thermal expansion due to elevated temperature, or corrosion, will not adversely affect the weldment.

K331.1.4 Heating and Cooling. Paragraph 331.1.4 applies.

K331.1.6 Temperature Verification. Heat treatment temperature shall be checked by thermocouple pyrometers or other suitable methods to ensure that the WPS requirements are met. Temperature-indicating materials and techniques shall not be detrimental to the base metals.

K331.1.7 Hardness Tests. Paragraph 331.1.7 applies.

K331.2 Specific Requirements

Paragraph 331.2 applies in its entirety.

K332 BENDING AND FORMING

K332.1 General

Pipe shall be hot or cold bent in accordance with a written procedure to any radius that will result in surfaces free of cracks and free of buckles. The procedure shall address at least the following, as applicable:

(a) material specification and range of size and thickness

(b) range of bend radii and fiber elongation

(c) minimum and maximum metal temperature during bending

(d) method of heating and maximum hold time

(e) description of bending apparatus and procedure to be used

(f) mandrels or material and procedure used to fill the bore

(g) method for protection of thread and machined surfaces

(h) examination to be performed

(i) required heat treatment

(j) postheat treatment dimensional adjustment technique

K332.2 Bending

K332.2.1 Bend Flattening. The difference between the maximum and the minimum diameters at any cross section of a bend shall not exceed 8% of nominal outside diameter for internal pressure and 3% for external pressure.

K332.2.2 Bending Temperature. Paragraph 332.2.2 applies, except that in cold bending of quenched and tempered ferritic materials, the temperature shall be at least 28°C (50°F) below the tempering temperature.

K332.3 Forming

Piping components shall be formed in accordance with a written procedure. The temperature range shall be consistent with material characteristics, end use, and specified heat treatment. The thickness after forming shall be not less than required by design. The procedure shall address at least the following, as applicable:

(a) material specification and range of size and thickness

(b) maximum fiber elongation expected during forming

(c) minimum and maximum metal temperature during bending

(d) method of heating and maximum hold time

(e) description of forming apparatus and procedure to be used

(f) materials and procedures used to provide internal support during forming

(g) examination to be performed

(h) required heat treatment

K332.4 Required Heat Treatment

K332.4.1 Hot Bending and Forming. After hot bending and forming, heat treatment is required for all thicknesses of P-Nos. 3, 4, 5, 6, 10A, and 10B materials that are not quenched and tempered. Times and temperatures shall be in accordance with para. 331. Quenched and tempered materials shall be reheat treated to the original material specification.

K332.4.2 Cold Bending and Forming

(a) After cold bending and forming, heat treatment in accordance with (b) below is required, regardless of

Copyright © 2015 by the American Society of Mechanical Engineers.
No reproduction may be made of this material without written consent of ASME.

thickness, when specified in the engineering design or when the maximum calculated fiber elongation exceeds 5% strain or 50% of the basic minimum specified longitudinal elongation for the applicable specification, grade, and thickness for P-Nos. 1 through 6 materials (unless it has been demonstrated that the selection of the pipe and the procedure for making the components provide assurance that the most severely formed portion of the material has retained an elongation of not less than 10%).

(b) Heat treatment is required regardless of thickness and shall conform to the temperatures and durations given in Table 331.1.1, except that for quenched and tempered materials, the stress relieving temperature shall not exceed a temperature 28°C (50°F) below the tempering temperature of the material.

K333 BRAZING AND SOLDERING

Brazing shall be in accordance with para. 333. The owner shall specify examination requirements for brazed joints.

K335 ASSEMBLY AND ERECTION

K335.1 General

Paragraph 335.1 applies.

K335.2 Flanged Joints

Paragraph 335.2 applies, except that bolts shall extend completely through their nuts.

K335.3 Threaded Joints

Paragraph 335.3 applies, except that threaded joints shall not be seal welded.

K335.4 Special Joints

Special joints (as defined in para. K318) shall be installed and assembled in accordance with the manufacturer's instructions, as modified by the engineering design. Care shall be taken to ensure full engagement of joint members.

K335.5 Cleaning of Piping

See Appendix F, para. F335.9.

PART 10
INSPECTION, EXAMINATION, AND TESTING

K340 INSPECTION

Paragraphs 340.1 through 340.4 apply.

K341 EXAMINATION

Paragraphs 341.1 and 341.2 apply.

K341.3 Examination Requirements

K341.3.1 General. Prior to initial operation, each piping installation, including components and workmanship, shall be examined in accordance with para. K341.4 and the engineering design. If heat treatment is performed, examination shall be conducted after its completion.

K341.3.2 Acceptance Criteria. Acceptance criteria shall be as stated in the engineering design and shall at least meet the applicable requirements stated in (a) and (b) below, and elsewhere in this Chapter.

(a) Table K341.3.2 states acceptance criteria (limits on imperfections) for welds. See Fig. 341.3.2 for typical weld imperfections.

(b) Acceptance criteria for castings are specified in para. K302.3.3.

K341.3.3 Defective Components and Workmanship. (14)
Defects (imperfections of a type or magnitude not acceptable by the criteria specified in para. K341.3.2) shall be repaired, or the defective item or work shall be replaced.

Examination shall be as follows:

(a) When the defective item or work is repaired, the repaired portion of the item or work shall be examined. The examination shall use the same methods and acceptance criteria employed for the original examination. See also para. K341.3.1(a).

(b) When the defective item or work is replaced, the new item or work used to replace the defective item or work shall be examined. The examination shall use any method and applicable acceptance criteria that meet the requirements for the original examination. See also para. K341.3.1(a).

K341.4 Extent of Required Examination

Piping shall be examined to the extent specified herein or to any greater extent specified in the engineering design.

K341.4.1 Visual Examination

(a) The requirements of para. 341.4.1(a) apply with the following exceptions in regard to extent of examination:

(1) Materials and Components. 100%.

(2) Fabrication. 100%.

(3) Threaded, Bolted, and Other Joints. 100%.

(4) Piping Erection. All piping erection shall be examined to verify dimensions and alignment. Supports, guides, and points of cold spring shall be checked to ensure that movement of the piping under all conditions of startup, operation, and shutdown will be accommodated without undue binding or unanticipated constraint.

Copyright © 2015 by the American Society of Mechanical Engineers.
No reproduction may be made of this material without written consent of ASME.

(14)

Table K341.3.2 Acceptance Criteria for Welds

Type of Imperfection	Criteria (A–E) for Types of Welds, and for Required Examination Methods [Note (1)]					
	Methods		Type of Weld			
	Visual	Ultrasonics or Radiography	Girth Groove	Longitudinal Groove [Note (2)]	Fillet [Note (3)]	Branch Connection [Note (4)]
Crack	X	X	A	A	A	A
Lack of fusion	X	X	A	A	A	A
Incomplete penetration	X	X	A	A	A	A
Internal porosity	. . .	X	B	B	NA	B
Slag inclusion or elongated indication	. . .	X	C	C	NA	C
Undercutting	X	X	A	A	A	A
Surface porosity or exposed slag inclusion	X	. . .	A	A	A	A
Concave root surface (suck-up)	X	X	D	D	NA	D
Surface finish	X	. . .	E	E	E	E
Reinforcement or internal protrusion	X	. . .	F	F	F	F

GENERAL NOTE: X = required examination; NA = not applicable; . . . = not required.

Criterion Value Notes for Table K341.3.2

Criterion		
Symbol	Measure	Acceptable Value Limits [Note (5)]
A	Extent of imperfection	Zero (no evident imperfection)
B	Size and distribution of internal porosity	See BPV Code, Section VIII, Division 1, Appendix 4
C	Slag inclusion or elongated indication. Indications are unacceptable if the amplitude exceeds the reference level, or indications have lengths that exceed	
	Individual length	6 mm (1/4 in.) for $\overline{T}_w \leq$ 19 mm (3/4 in.) $\overline{T}_w$ /3 for 19 mm (3/4 in.) < $\overline{T}_w \leq$ 57 mm (2 1/4 in.) 19 mm (3/4 in.) for $\overline{T}_w >$ 57 mm (2 1/4 in.)
	Cumulative length	$\leq \overline{T}_w$ in any 12 $\overline{T}_w$ weld length
D	Depth of surface concavity	Wall Thickness, $\overline{T}_w$, mm (in.) / Depth of Surface Concavity, mm (in.) ≤ 13 (1/2) / ≤ 1.5 (1/16) > 13 (1/2) and ≤ 51 (2) / ≤ 3 (1/8) > 51 (2) / ≤ 4 (5/32) and total joint thickness including weld reinforcement $\geq \overline{T}_w$
E	Surface roughness	≤ 12.5 μm (500 μin.) R_a (see ASME B46.1 for definition of roughness average, R_a)
F	Height of reinforcement or internal protrusion [Note (6)] in any plane through the weld shall be within the limits of the applicable height value in the tabulation at the right. Weld metal shall be fused with and merge smoothly into the component surfaces.	Wall Thickness, $\overline{T}_w$, mm (in.) / External Weld Reinforcement or Internal Weld Protrusion, mm (in.) ≤ 13 (1/2) / ≤ 1.5 (1/16) > 13 (1/2) and ≤ 51 (2) / ≤ 3 (1/8) > 51 (2) / ≤ 4 (5/32)

NOTES:
(1) Criteria given are for required examination. More stringent criteria may be specified in the engineering design.
(2) Longitudinal welds include only those permitted in paras. K302.3.4 and K305. The criteria shall be met by all welds, including those made in accordance with a standard listed in Table K326.1 or in Appendix K.
(3) Fillet welds include only those permitted in para. K311.2.2.
(4) Branch connection welds include only those permitted in para. K328.5.4.
(5) Where two limiting values are given, the lesser measured value governs acceptance. $\overline{T}_w$ is the nominal wall thickness of the thinner of two components joined by a butt weld.
(6) For groove welds, height is the lesser of the measurements made from the surfaces of the adjacent components. For fillet welds, height is measured from the theoretical throat; internal protrusion does not apply. Required thickness t_m shall not include reinforcement or internal protrusion.

Copyright © 2015 by the American Society of Mechanical Engineers.
No reproduction may be made of this material without written consent of ASME.

(b) Pressure-Containing Threads. 100% examination for finish and fit is required. Items with visible imperfections in thread finish and/or the following defects shall be rejected:

(1) Tapered Threads. Failure to meet gaging requirements in API Spec 5B or ASME B1.20.1, as applicable.

(2) Straight Threads. Excessively loose or tight fit when gaged for light interference fit.

K341.4.2 Radiographic and Ultrasonic Examination

(a) All girth, longitudinal, and branch connection welds shall be 100% radiographically examined, except as permitted in (b) below.

(b) When specified in the engineering design and with the owner's approval, ultrasonic examination of welds may be substituted for radiographic examination where $\overline{T}_w \geq 13$ mm (½ in.).

(c) In-process examination (see para. 344.7) shall not be substituted for radiographic or ultrasonic examination of welds.

K341.4.3 Certifications and Records. Paragraph 341.4.1(c) applies.

K341.5 Supplementary Examination

Any of the examination methods described in para. K344 may be specified by the engineering design to supplement the examination required by para. K341.4. The extent of supplementary examination to be performed and any acceptance criteria that differ from those specified in para. K341.3.2 shall be specified in the engineering design.

K341.5.1 Hardness Tests. Paragraph 341.5.2 applies.

K341.5.2 Examinations to Resolve Uncertainty. Paragraph 341.5.3 applies.

K342 EXAMINATION PERSONNEL

Paragraph 342 applies, except that personnel performing and evaluating results of ultrasonic examination of welds shall be qualified and certified UT Level II or III in accordance with ASNT SNT-TC-1A, ACCP (ASNT Central Certification Program), or CP-189 (Qualification and Certification of Nondestructive Testing Personnel). Qualification of these personnel shall also be by written examination.

K343 EXAMINATION PROCEDURES

Paragraph 343 applies. See also para. 344.6.1.

K344 TYPES OF EXAMINATION

K344.1 General

Paragraphs 344.1.1 and 344.1.2 apply. In para. 344.1.3, terms other than "100% examination" apply only to supplementary examinations.

K344.2 Visual Examination

Paragraph 344.2 applies in its entirety.

K344.3 Magnetic Particle Examination

The method for magnetic particle examination shall be as specified in

(a) paragraph K302.3.3(b) for castings

(b) BPV Code, Section V, Article 7 for welds and other components

K344.4 Liquid Penetrant Examination

The method for liquid penetrant examination shall be as specified in

(a) paragraph K302.3.3(b) for castings

(b) BPV Code, Section V, Article 6 for welds and other components

K344.5 Radiographic Examination

The method for radiographic examination shall be as specified in

(a) paragraph K302.3.3(c) for castings

(b) BPV Code, Section V, Article 2 for welds and other components

K344.6 Ultrasonic Examination

K344.6.1 Castings. The method for ultrasonic examination of castings shall be as specified in para. K302.3.3(c).

K344.6.2 Pipe and Tubing

(a) Method. Pipe and tubing, required or selected in accordance with Table K305.1.2 to undergo ultrasonic examination, shall pass a 100% examination for longitudinal defects in accordance with ASTM E213, Ultrasonic Testing of Metal Pipe and Tubing. Longitudinal (axial) reference notches shall be introduced on the outer and inner surfaces of the calibration (reference) standard in accordance with Fig. 3(c) of ASTM E213 to a depth not greater than the larger of 0.1 mm (0.004 in.) or 4% of specimen thickness and a length not more than 10 times the notch depth.

(b) Acceptance Criteria. Any indication greater than that produced by the calibration notch represents a defect; defective pipe and tubing shall be rejected.

(c) Records. For pipe and tubing that passes this examination, a report shall be prepared that contains at least the information specified in 15.2.1 through 15.2.6 of ASTM E213.

K344.6.3 Welds. The method for ultrasonic examination of welds shall be as specified in the ASME BPV Code, Section V, Article 4 and Section VIII, Division 3, KE-301 and KE-302, except that

(a) Performance demonstration shall be required.

(b) The employer's written practice for UT personnel qualification shall meet ASNT SNT-TC-1A, ACCP, or

Copyright © 2015 by the American Society of Mechanical Engineers.
No reproduction may be made of this material without written consent of ASME.

CP-189. The recommended guidelines in SNT-TC-1A, ACCP, or CP-189 shall be required.

(c) Written procedure in accordance with Section V, T-421.1 shall be required.

(d) Procedure qualification in accordance with Section V, T-421.1 shall be required.

K344.7 In-Process Examination

Paragraph 344.7 applies in its entirety.

K344.8 Eddy Current Examination

K344.8.1 Method. The method for eddy current examination of pipe and tubing shall follow the general guidelines of the ASME BPV Code, Section V, Article 8, subject to the following specific requirements:

(a) Cold drawn austenitic stainless steel pipe and tubing, selected in accordance with Table K305.1.2 for eddy current examination, shall pass a 100% examination for longitudinal defects.

(b) A calibration (reference) standard shall be prepared from a representative sample. A longitudinal (axial) reference notch shall be introduced on the inner surface of the standard to a depth not greater than the larger of 0.1 mm (0.004 in.) or 5% of specimen thickness and a length not more than 6.4 mm (0.25 in.).

K344.8.2 Acceptance Criteria. Any indication greater than that produced by the calibration notch represents a defect; defective pipe or tubing shall be rejected.

K344.8.3 Records. For pipe and tubing that passes this examination, a report shall be prepared that includes at least the following information:

(a) material identification by type, size, lot, heat, etc.

(b) listing of examination equipment and accessories

(c) details of examination technique (including examination speed and frequency) and end effects, if any

(d) description of the calibration standard, including dimensions of the notch, as measured

(e) examination results

K345 LEAK TESTING

K345.1 Required Leak Test

Prior to initial operation, each piping system shall be leak tested.

(a) Each weld and each piping component, except bolting and individual gaskets to be used during final system assembly and pressure-relieving devices to be used during operation, shall be hydrostatically or pneumatically leak tested in accordance with para. K345.4 or K345.5, respectively. The organization conducting the test shall ensure that during the required leak testing of components and welds, adequate protection is provided to prevent injury to people and damage to property from missile fragments, shock waves, or other consequences of any failure that might occur in the pressurized system.

(b) In addition to the requirements of (a) above, a leak test of the installed piping system, excluding pressure-relieving devices to be used during operation, shall be conducted at a pressure not less than 110% of the design pressure to ensure tightness, except as provided in (c) or (d) below.

(c) If the leak test required in (a) above is conducted on the installed piping system, the additional test in (b) above is not required.

(d) With the owner's approval, pressure-relieving devices to be used during operation may be included in the leak test required in (b) above. The leak test pressure may be reduced to prevent the operation of, or damage to, the pressure-relieving devices, but shall not be less than 90% of the lowest set pressure of the pressure-relieving devices in the system.

(e) For closure welds, examination in accordance with para. K345.2.3(c) may be substituted for the leak test required in (a) above.

(f) None of the following leak tests may be used in lieu of the leak tests required in para. K345.1:

(1) initial service leak test (para. 345.7)

(2) sensitive leak test (para. 345.8)

(3) alternative leak test (para. 345.9)

K345.2 General Requirements for Leak Tests

Paragraphs 345.2.4 through 345.2.7 apply. See below for paras. K345.2.1, K345.2.2, and K345.2.3.

K345.2.1 Limitations on Pressure

(a) Through-Thickness Yielding. If the test pressure would produce stress (exclusive of stress intensification) in excess of S_{yt} at the outside surface of a component[10] at test temperature, as determined by calculation or by testing in accordance with para. K304.7.2(b), the test pressure may be reduced to the maximum pressure that will result in a stress (exclusive of stress intensification) at the outside surface that will not exceed S_{yt}.

(b) The provisions of paras. 345.2.1(b) and (c) apply.

K345.2.2 Other Test Requirements. Paragraph 345.2.2 applies. In addition, the minimum metal temperature during testing shall be not less than the impact test temperature (see para. K323.3.4).

K345.2.3 Special Provisions for Leak Testing. Paragraphs K345.2.3(a), (b), and (c) below apply only to the leak test specified in para. K345.1(a). They are not applicable to the installed piping system leak test specified in para. K345.1(b).

(a) Piping Components and Subassemblies. Piping components and subassemblies may be leak tested either separately or as assembled piping.

[10] See para. K304.1.2, footnote 4.

Copyright © 2015 by the American Society of Mechanical Engineers.
No reproduction may be made of this material without written consent of ASME.

(b) Flanged Joints. Flanged joints used to connect piping components that have previously been leak tested, and flanged joints at which a blank or blind flange is used to isolate equipment or other piping during the leak test, need not be leak tested.

(c) Closure Welds. Leak testing of the final weld connecting piping systems or components that have been successfully leak tested is not required, provided the weld is examined in-process in accordance with para. 344.7 and passes the required 100% radiographic examination in accordance with para. K341.4.2.

K345.3 Preparation for Leak Test

Paragraph 345.3 applies in its entirety.

K345.4 Hydrostatic Leak Test

Paragraph 345.4.1 applies. See paras. K345.4.2 and K345.4.3 below.

(14) **K345.4.2 Test Pressure for Components and Welds.** Except as provided in para. K345.4.3, the hydrostatic test pressure at every point in a metallic piping system shall be as follows:

(a) not less than 1.25 times the design pressure.

(b) when the design temperature is greater than the test temperature, the minimum test pressure, at the point under consideration, shall be calculated by eq. (38)

$$P_T = 1.25PS_T/S \tag{38}$$

where

P = internal design gage pressure

P_T = minimum test gage pressure

S = allowable stress at component design temperature for the prevalent pipe material; see Appendix K, Table K-1

S_T = allowable stress at test temperature for the prevalent pipe material; see Table K-1

(c) in those cases where the piping system may not include pipe itself, any other component in the piping system, other than pipe-supporting elements and bolting, may be used to determine the S_T/S ratio based on the applicable allowable stresses obtained from Table K-1. In those cases where the piping system may be made up of equivalent lengths of more than one material, the S_T/S ratio shall be based on the minimum calculated ratio of the included materials.

K345.4.3 Hydrostatic Test of Piping With Vessels as a System. Paragraph 345.4.3(a) applies.

K345.5 Pneumatic Leak Test

Paragraph 345.5 applies, except para. 345.5.4. See para. K345.5.4 below.

K345.5.4 Test Pressure. The pneumatic test pressure for components and welds shall be identical to that required for the hydrostatic test in accordance with para. K345.4.2.

K345.6 Hydrostatic-Pneumatic Leak Test for Components and Welds

If a combination hydrostatic-pneumatic leak test is used, the requirements of para. K345.5 shall be met, and the pressure in the liquid-filled part of the piping shall not exceed the limits stated in para. K345.4.2.

K346 RECORDS

K346.1 Responsibility

It is the responsibility of the piping designer, the manufacturer, the fabricator, and the erector, as applicable, to prepare the records required by this Chapter and by the engineering design.

K346.2 Required Records

At least the following records, as applicable, shall be provided to the owner or the Inspector by the person responsible for their preparation:

(a) the engineering design

(b) material certifications

(c) procedures used for fabrication, welding, heat treatment, examination, and testing

(d) repair records of materials and piping components listed in Table K326.1 or unlisted components in accordance with para. K302.2.3(a), including the welding procedure used for each, and location of repairs

(e) performance qualifications for welders and welding operators

(f) qualifications of examination personnel

(g) records of examination of pipe and tubing for longitudinal defects as specified in paras. K344.6.2(c) and K344.8.3, as applicable

K346.3 Retention of Records

The owner shall retain one set of the required records for at least 5 years after they are received.

Copyright © 2015 by the American Society of Mechanical Engineers.
No reproduction may be made of this material without written consent of ASME.

Chapter X
High Purity Piping

U300 GENERAL STATEMENTS

(a) Chapter X pertains to piping designated by the owner as being in High Purity Fluid Service. See also Appendix M.

(b) The organization, content, and paragraph designations of this Chapter correspond to those of the base Code (Chapters I through VI), Chapter VII, and Chapter VIII. The prefix U is used to designate Chapter X requirements.

(c) Provisions and requirements of the base Code, Chapter VII, and Chapter VIII apply only as stated in this Chapter.

(d) For piping not in High Purity Fluid Service, Code requirements are found in Chapters I through IX.

(e) *High Purity Piping.* Chapter X provides alternative rules for design and construction of piping designated by the owner as being High Purity Fluid Service.

(1) These rules apply only when specified by the owner, and only as a whole, not in part.

(2) Chapter X rules do not provide for High Pressure Fluid Service.

(3) Chapter VII applies to nonmetallic piping and piping lined with nonmetals in High Purity Fluid Service.

(f) Chapter I applies.

PART 1
CONDITIONS AND CRITERIA

Chapter II, Part 1 applies. See para. U301.3.2(b)(5).

U301 DESIGN CONDITIONS

U301.3 Design Temperature

U301.3.2 Uninsulated Components

(b)(5) compression, face seal, and hygienic clamped fittings and joints — 100% of the fluid temperature

PART 2
PRESSURE DESIGN OF PIPING COMPONENTS

Chapter II, Part 2 applies. See Fig. U304.5.3 for representative configuration for metal face seal blanks.

PART 3
FLUID SERVICE REQUIREMENTS FOR PIPING COMPONENTS

Chapter II, Part 3 applies. See paras. U306.6, U307.3, and U308.

U306 FITTINGS, BENDS, MITERS, LAPS, AND BRANCH CONNECTIONS

U306.6 Tube Fittings

(a) Tube fittings not listed in Table 326.1 or Appendix A shall meet the pressure design requirements described in para. 302.2.3 and the mechanical strength requirements described in para. 303.

(b) Compression-type tube fittings may be used in accordance with para. U315.2 provided that the type of fitting selected complies with the following:

(1) The gripping action of the fitting shall provide vibration resistance as demonstrated by exhibiting a stress intensity factor equal to or less than 1.5.

(2) Intermixing of components from different manufacturers is permitted only when specified in the engineering design.

(c) Face seal or hygienic clamped-type fittings in which the tightness of the joint is provided by a seating surface other than the threads (e.g., a metal face-seal fitting comprising internal and external threaded components, glands, and gasket or other constructions shown typically in Fig. U335.7.1) may be used.

U307 VALVES AND SPECIALTY COMPONENTS

U307.3 High Purity Fluid Service Valves

Valves such as ball, bellows, and diaphragm valves designed for High Purity Fluid Service that are not listed in Table 326.1 shall meet the pressure design requirements described in para. 302.2.2 and the mechanical strength requirements described in para. 303.

U308 FLANGES, BLANKS, FLANGE FACINGS, AND GASKETS

Flanges should be avoided whenever possible. When flanges are utilized, para. 308 applies, except expanded joint flanges described in para. 308.2.2 are not permitted.

Copyright © 2015 by the American Society of Mechanical Engineers.
No reproduction may be made of this material without written consent of ASME.

Fig. U304.5.3 Blanks

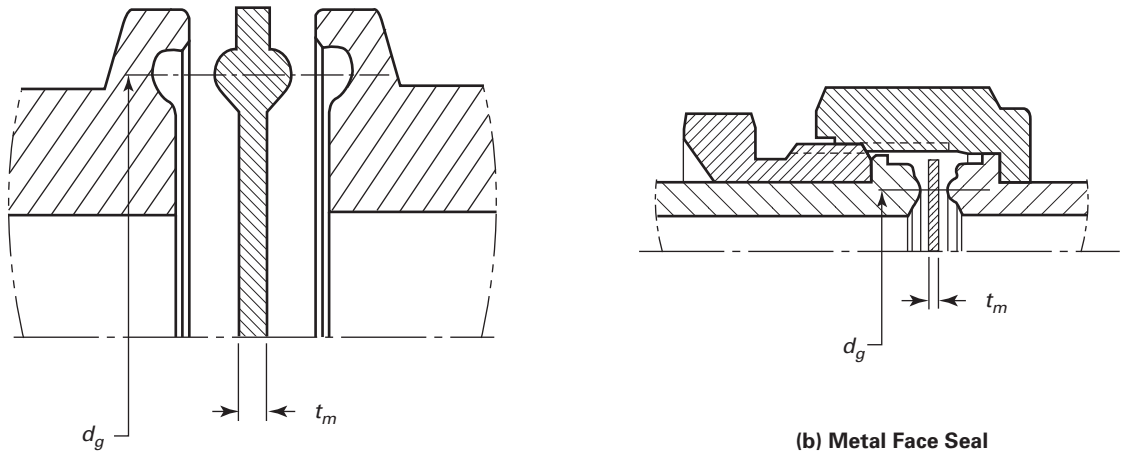

(a) Hygenic Clamp-Type Fitting

(b) Metal Face Seal

PART 4
FLUID SERVICE REQUIREMENTS FOR PIPING JOINTS

Chapter II, Part 4 applies, except expanded joints, flared tube fittings, and caulked joints, described in paras. 313, 315, and 316, respectively, are not permitted. See paras. U311, U311.1(c), U314, and U315.

U311 WELDED JOINTS

Paragraph 311 applies, except for para. 311.1(c). See para. U311.1(c).

U311.1 General

(c) Examination shall be in accordance with para. U341.4.1.

U314 THREADED JOINTS

Threaded joints should be avoided whenever possible. When threaded joints are utilized, para. 314 applies.

U315 TUBING JOINTS

Paragraph 315 applies. See paras. U315.1, U315.2(c), and U315.3.

(14) #### U315.1 General

In selecting and applying compression, face seal, and hygienic clamp-type tube fittings, the designer shall consider the possible adverse effects on the joints of such factors as assembly and disassembly, cyclic loading, vibration, shock, and thermal expansion and contraction. See para. FU315.

U315.2 Joints Conforming to Listed Standards

(c) Joints using compression, face seal, hygienic clamp, and automatic welding tube fittings covered by listed standards may be used.

U315.3 Joints Not Conforming to Listed Standards

(a) Compression-type tube fitting joints shall be fully gaugeable on initial installation to ensure sufficient tightening.

(b) Safeguarding is required for face seal or hygienic clamped-type joints used under severe cyclic conditions.

PART 5 (14)
FLEXIBILITY AND SUPPORT

Chapter II, Part 5 applies. See para. U319.3.6.

U319 PIPING FLEXIBILITY

U319.3 Properties for Flexibility Analysis

U319.3.6 Flexibility and Stress Intensification Factors. Paragraph 319.3.6 applies; however, piping components used in high-purity applications, e.g., multiport block valves, hygienic unions, crosses, and point-of-use and adaptor fittings, often do not have geometries similar to those in Table D300.

PART 6
SYSTEMS

Chapter II, Part 6 applies.

PART 7
METALLIC MATERIALS

The provisions and requirements in Chapter III for materials apply. Materials commonly used in high

Copyright © 2015 by the American Society of Mechanical Engineers.
No reproduction may be made of this material without written consent of ASME.

purity process piping systems include austenitic, ferritic, and duplex stainless steels, and nickel and nickel alloys.

PART 8
STANDARDS FOR PIPING COMPONENTS

Chapter IV applies.

PART 9
FABRICATION, ASSEMBLY, AND ERECTION

U327 GENERAL

Metallic piping materials and components are prepared for assembly and erection by one or more of the fabrication processes covered in paras. U328, U330, U331, and U332. When any of these processes is used in assembly or erection, requirements are the same as for fabrication.

(14) U328 WELDING

Paragraph 328 applies, except for paras. 328.3.2, 328.5.4, and 328.5.5. See paras. U328.2.1(g) and (h), U328.4, U328.4.4, and U328.5.1(g) for additional requirements.

U328.2 Welding and Brazing Qualification

U328.2.1 Qualification Requirements

(g) A change in the type or nominal composition of the backing (purge) gas shall require requalification.

(h) The welding process shall be orbital GTAW, except for tack welds. Tack welds made prior to orbital welding may be manual GTAW.

U328.4 Preparation for Welding

Paragraph 328.4.1 applies. Additionally, when weld coupon examination is specified in the engineering design, primary weld coupons shall be made in accordance with para. U328.4.4(b)(1) and examined in accordance with para. U344.8 prior to the start of production welding. This will demonstrate that the orbital welding equipment is set up properly and the weld program is sufficient to make repeatable welds in accordance with the qualified welding procedure specification (WPS).

U328.4.4 Preparation of Weld Coupons

(a) Weld coupons shall be made by qualified welding operators using the same qualified WPS and the same variables used for production welds.

(b) Methods

(1) Primary weld coupons shall be made from two short sections of tubing selected from the same diameter, wall thickness, and alloy as the material used for production. Sections shall be of sufficient length for fit up in the weld head allowing for attachment of inside diameter purge apparatus outside of the weld head. The sections shall be welded together in a square groove weld on a butt joint.

(2) Production weld coupons may be made in accordance with para. U328.4.4(b)(1) or, at the owner's discretion, may be cut from actual production welds. The weld coupons shall be selected to ensure that the work product of each welding operator doing the production welding is represented.

U328.5 Welding Requirements

U328.5.1 General

(g) Tack welds shall be fully consumed after completion of the weld. Tack welds shall be made by a qualified welder or welding operator.

U330 PREHEATING

Paragraph 330 applies.

U331 HEAT TREATMENT

Paragraph 331 applies.

U332 BENDING AND FORMING

Paragraph 332 applies in its entirety.

U333 BRAZING AND SOLDERING

Brazing and soldering are not permitted.

U335 ASSEMBLY AND ERECTION

Paragraph 335 applies, except for paras. 335.4.1, 335.5, and 335.6. See paras. U335.7 and U335.8.

U335.7 Face Seal Joints

U335.7.1 Metal Face Seal. Metal face seal joints shall be installed and assembled in accordance with manufacturer's instructions. See Fig. U335.7.1, drawing (a).

U335.7.2 Nonmetallic Face Seal. Nonmetallic face seal joints shall be installed and assembled in accordance with manufacturer's instructions. Care shall be taken to avoid distorting the seal when incorporating such joints into piping assemblies by welding. See Fig. U335.7.1, drawing (b).

U335.8 Hygienic Clamp Joint Assembly (14)

Hygienic clamp joint assembly components, e.g., those shown in Figs. U335.8A, U335.8B, and U335.8C, shall be installed and assembled in accordance with the manufacturer's instructions. Care shall be taken to avoid distorting the seal when incorporating such joints into piping assemblies by welding.

Copyright © 2015 by the American Society of Mechanical Engineers.
No reproduction may be made of this material without written consent of ASME.

Fig. U335.7.1 Face Seal Joints

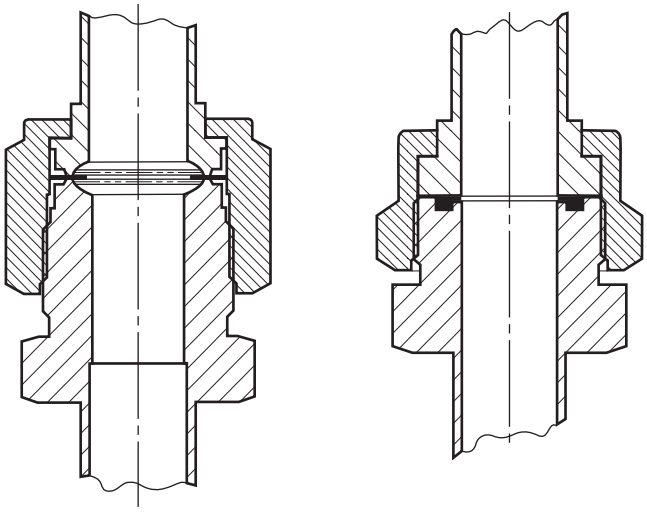

(a) Metal Face Seal (b) Nonmetallic Face Seal

Fig. U335.8A Hygienic Clamp Joint Assembly (14)

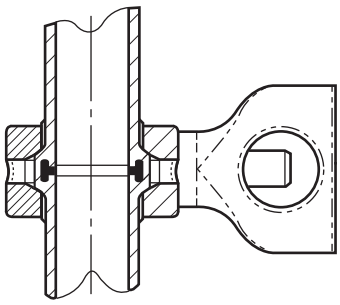

Copyright © 2015 by the American Society of Mechanical Engineers.
No reproduction may be made of this material without written consent of ASME.

(14) **Fig. U335.8B Hygienic Clamp Types**

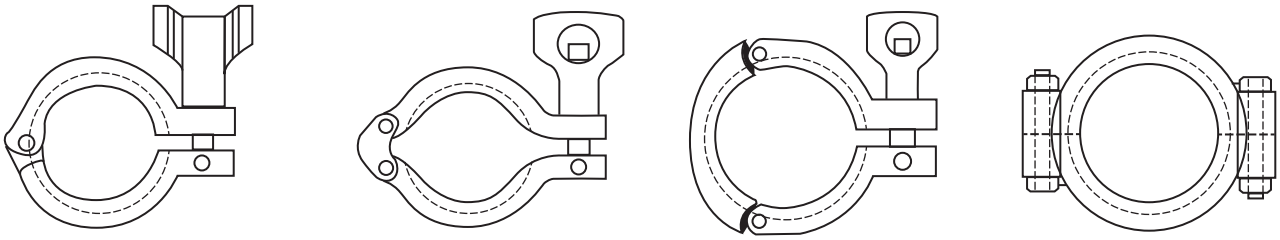

(1) Two-Piece Single Pin With Wing Nut

(2) Two-Piece Double Pin With Wing Nut

(3) Three-Piece Double Pin With Wing Nut

(4) Two-Bolt Heavy Duty

(14) **Fig. U335.8C Hygienic Ferrules**

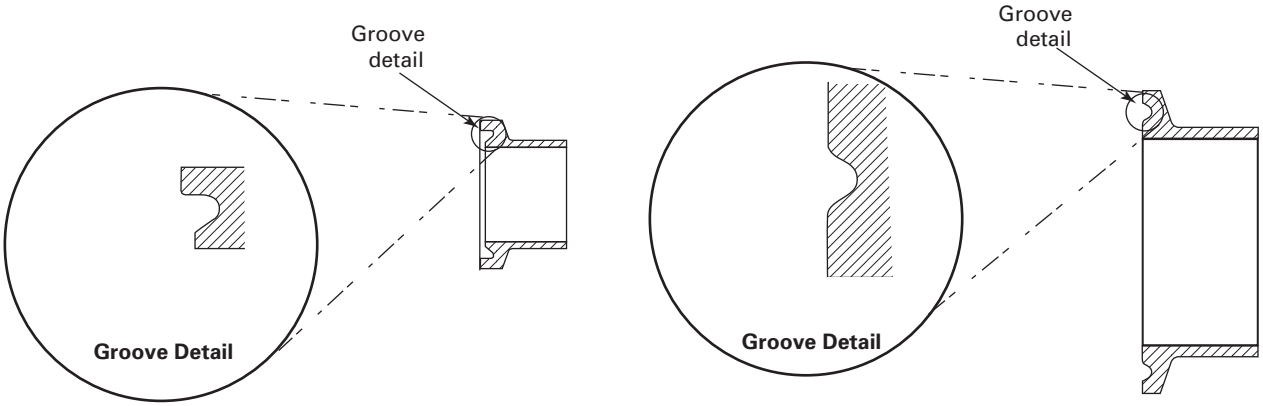

(1) Type A: O.D. Tube Sizes 1/4 in. Through 1 in.

(2) Type B: O.D. Tube Sizes 1 in. and Above

PART 10
INSPECTION, EXAMINATION, AND TESTING

U340 INSPECTION

Paragraph 340 applies in its entirety.

U341 EXAMINATION

Paragraph 341 applies. See paras. U341.3.2 and U341.4.1.

U341.3 Examination Requirements

U341.3.2 Acceptance Criteria. Where weld coupon examination is specified in the engineering design, acceptance criteria shall be as stated in the referencing Code or standard (e.g., ASME BPE or SEMI) and shall at least meet the applicable requirements in para. 341.3.2.

U341.4 Extent of Required Examination

U341.4.1 Examination. A weld coupon examination in accordance with para. U344.8 may be used in lieu of the 5% random radiography/ultrasonic examination required in para. 341.4.1(b)(1) when the following are employed in fabrication:

(a) autogenous automatic orbital welding

(b) automatic orbital welding with the use of consumable insert rings

U341.4.5 Weld Coupon Examination. Weld coupons shall be made and examined in accordance with para. U344.8 when any of the following conditions exist:

(a) beginning of shift

(b) change of purge source

(c) change of power supply

(d) change of equipment, e.g., weld head, weld-head extensions, tungsten

(e) anytime there is a weld defect

U342 EXAMINATION PERSONNEL

Paragraph 342 applies in its entirety. See para. U342.2(a).

Copyright © 2015 by the American Society of Mechanical Engineers.
No reproduction may be made of this material without written consent of ASME.

U342.2 Specific Requirement

(a) For weld coupon examination

(1) the examinations shall be performed by personnel other than those performing the production work or

(2) with the owner's approval, the personnel performing the production work shall be permitted to perform the examination, provided the personnel meet the personnel qualification and certification requirements in para. 342.1

U343 EXAMINATION PROCEDURES

Paragraph 343 applies.

U344 TYPES OF EXAMINATION

Paragraph 344 applies. See paras. U344.2 and U344.8.

U344.2 Visual Examination

Paragraph 344.2 applies, except in addition to the method described in para. 344.2.2, borescopic examination shall be acceptable.

(14) U344.8 Weld Coupon Examination

U344.8.1 Requirements. Weld coupon examination comprises examination of weld coupons for the following, as applicable:

(a) prior to welding of coupons made in accordance with para. U328.4.4(b)(1)

(1) joint preparation and cleanliness

(2) fit-up, collet or clamp grip, and alignment in the weld head

(3) variables in the orbital welding machine specified in the WPS

(b) after welding of coupons made in accordance with para. U328.4.4(b)(1), and for weld coupons made in accordance with para. U328.4.4(b)(2), for compliance with para. U341.3.2

(1) alignment

(2) weld penetration

(3) weld bead width variation

(4) weld bead meander

(5) discoloration

(6) weld defects, e.g., cracks, porosity, or sulfur stringers

To allow direct visual examination of the inside surfaces, the weld coupon may be cut or a suitable indirect visual examination method (e.g., borescopic examination) may be used.

U344.8.2 Method. A weld coupon shall be made to allow visual examination in accordance with para. U344.2, unless otherwise specified in the engineering design.

U345 TESTING

Paragraph 345 applies in its entirety. See paras. U345.1 and U345.8.

U345.1 Required Leak Test

Paragraph 345.1 applies, except the preferred test method is pneumatic.

(a) At the owner's option, a helium mass spectrometer test in accordance with para. U345.8.1 may be used in lieu of the pneumatic leak test described in para. 345.5.

U345.8 Sensitive Leak Test

Paragraph 345.8 applies, except the helium mass spectrometer test described in para. U345.8.1 is also an acceptable method.

U345.8.1 Helium Mass Spectrometer Test. The test shall be one of the following methods and performed in accordance with the following:

(a) For pressurized systems, the test shall be in accordance with BPV Code Section V, Article 10, Appendix IV (Helium Mass Spectrometer — Detector Probe Technique).

(1) The test pressure shall be the lesser of 105 kPa (15 psig) gage, or 25% of the design pressure.

(2) Prior to testing, the test pressure shall be held a minimum of 30 min.

(3) Unless otherwise specified in the engineering design, the system tested is acceptable when no leakage is detected that exceeds the allowable leakage rate of 1×10^{-4} std cc/s.

(b) For evacuated systems, the test shall be in accordance with BPV Code Section V, Article 10, Appendix V (Helium Mass Spectrometer Test — Tracer Probe Technique).

(1) The piping system shall be evacuated to an absolute pressure sufficient for connection of the helium mass spectrometer to the system.

(2) Unless otherwise specified in the engineering design, the system tested is acceptable when no leakage is detected that exceeds the allowable leakage rate of 1×10^{-5} std cc/s.

U345.9 Alternative Leak Test

Paragraph 345.9 applies, except welds may be examined by weld coupon examination method in accordance with para. U341.4.5 and the test method may be helium mass spectrometer test in accordance with para. U345.8.1.

U346 RECORDS

U346.2 Responsibility

It is the responsibility of the piping designer, the manufacturer, the fabricator, and the erector, as applicable, to

Copyright © 2015 by the American Society of Mechanical Engineers.
No reproduction may be made of this material without written consent of ASME.

prepare the records required by this Code, ASME BPE, SEMI, or other industry standard as specified in the engineering design.

U346.3 Retention of Records

Paragraph 346.3 applies.

PART 11
HIGH PURITY PIPING IN CATEGORY M FLUID SERVICE

UM300 GENERAL STATEMENTS

(a) Chapter X, Part 11 pertains to piping designated by the owner as being high purity piping in Category M Fluid Service. See also Appendix M.

(b) The organization, content, and paragraph designations of these Parts correspond to those of Chapter VIII. The prefix UM is used.

(c) Paragraphs M300(d), (e), and (f) apply.

(d) Provisions and requirements of Chapter VIII apply with the additional requirements in paras. UM307, UM307.2, UM322, UM322.3, UM328, UM335, UM335.3.3, UM341, UM341.4(b)(1) and (2), and UM345(b).

UM307 METALLIC VALVES AND SPECIALTY COMPONENTS

Paragraph M307 applies in its entirety. See para. UM307.2(c).

UM307.2 Specific Requirements

(c) Bellows or diaphragm sealed type valves shall be used.

UM322 SPECIFIC PIPING SYSTEMS

Paragraph M322 applies, except for para. M322.3(c). See para. UM322.3(c).

UM322.3 Instrument Piping

(c) joining methods shall conform to the requirements of para. U315

UM328 WELDING OF MATERIALS

Welding shall be in accordance with paras. M311.1 and U328, except examination shall be in accordance with UM341.

UM335 ASSEMBLY AND ERECTION OF METALLIC PIPING

Paragraph M335 applies, except for para. M335.3.3. See para. UM335.3.3.

UM335.3.3 Straight-Threaded Joints. The requirements of para. M335.3.3 are subject to the limitations in para. UM322.

UM341 EXAMINATION

Paragraph M341 applies. See paras. UM341.4(b)(1) and (2).

UM341.4 Extent of Required Examination

(b) Other Examination

(1) The 20% random radiography/ultrasonic examination required in para. M341.4(b)(1) applies.

(2) The in-process examination alternative permitted in M341.4(b)(2) applies, except a weld coupon examination in accordance with para. U344.8 is also an acceptable substitute when specified in the engineering design or by the Inspector.

UM345 TESTING

Paragraph M345(a) applies. See para. UM345(b).

(b) A sensitive leak test in accordance with para. U345.8 shall be included in the required leak test (para. U345.1).

Copyright © 2015 by the American Society of Mechanical Engineers.
No reproduction may be made of this material without written consent of ASME.

APPENDIX A
ALLOWABLE STRESSES AND QUALITY FACTORS FOR METALLIC PIPING AND BOLTING MATERIALS

Begins on the next page.

Copyright © 2015 by the American Society of Mechanical Engineers.
No reproduction may be made of this material without written consent of ASME.

(14)

Specification Index for Appendix A

Spec. No.	Title
ASTM	
A36	Carbon Structural Steel
A47	Ferritic Malleable Iron Castings
A48	Gray Iron Castings
A53	Pipe, Steel, Black and Hot-Dipped, Zinc Coated, Welded and Seamless
A105	Carbon Steel Forgings, for Piping Applications
A106	Seamless Carbon Steel Pipe for High-Temperature Service
A126	Gray Iron Castings for Valves, Flanges, and Pipe Fittings
A134	Pipe, Steel, Electric-Fusion (Arc)-Welded (Sizes NPS 16 and Over)
A135	Electric-Resistance-Welded Steel Pipe
A139	Electric-Fusion (Arc)-Welded Steel Pipe (NPS 4 and Over)
A167	Stainless and Heat-Resisting Chromium-Nickel Steel Plate, Sheet and Strip
A179	Seamless Cold-Drawn Low-Carbon Steel Heat-Exchanger and Condenser Tubes
A181	Carbon Steel Forgings for General Purpose Piping
A182	Forged or Rolled Alloy and Stainless Steel Pipe Flanges, Forged Fittings, and Valves and Parts for High Temperature Service
A193/A193M	Alloy-Steel and Stainless Steel Bolting Materials for High Temperature or High Pressure Service and Other Special Purpose Applications
A194/A194M	Carbon and Alloy Steel Nuts for Bolts for High Pressure or High Temperature Service, or Both
A197	Cupola Malleable Iron
A202	Pressure Vessel Plates, Alloy Steel, Chromium-Manganese-Silicon
A203	Pressure Vessel Plates, Alloy Steel, Nickel
A204	Pressure Vessel Plates, Alloy Steel, Molybdenum
A213	Seamless Ferritic and Austenitic Alloy-Steel Boiler, Superheater, and Heat-Exchanger Tubes
A216	Steel Castings, Carbon, Suitable for Fusion Welding for High-Temperature Service
A217	Steel Castings, Martensitic Stainless and Alloy, for Pressure-Containing Parts Suitable for High-Temperature Service
A234	Piping Fittings of Wrought Carbon Steel and Alloy Steel for Moderate and High Temperatures
A240	Chromium and Chromium-Nickel Stainless Steel Plate, Sheet, and Strip for Pressure Vessels
A268	Seamless and Welded Ferritic and Martensitic Stainless Steel Tubing for General Service
A269	Seamless and Welded Austenitic Stainless Steel Tubing for General Service
A278	Gray Iron Castings for Pressure-Containing Parts for Temperatures Up to 650°F (350°C)
A283	Low and Intermediate Tensile Strength Carbon Steel Plates
A285	Pressure Vessel Plates, Carbon Steel, Low- and Intermediate-Tensile Strength
ASTM (Cont'd)	
A299	Pressure Vessel Plates, Carbon Steel, Manganese-Silicon
A302	Pressure Vessel Plates, Alloy Steel, Manganese-Molybdenum and Manganese-Molybdenum-Nickel
A307	Carbon Steel Bolts and Studs, 60,000 PSI Tensile Strength
A312	Seamless, Welded, and Heavily Cold Worked Austenitic Stainless Steel Pipe
A320	Alloy-Steel and Stainless Steel Bolting Materials for Low-Temperature Service
A325	Structural Bolts, Steel, Heat Treated, 120/105 ksi Minimum Tensile Strength
A333	Seamless and Welded Steel Pipe for Low-Temperature Service
A334	Seamless and Welded Carbon and Alloy-Steel Tubes for Low-Temperature Service
A335	Seamless Ferritic Alloy Steel Pipe for High-Temperature Service
A350	Carbon and Low-Alloy Steel Forgings, Requiring Notch Toughness Testing for Piping Components
A351	Castings, Austenitic, for Pressure-Containing Parts
A352	Steel Castings, Ferritic and Martensitic, for Pressure-Containing Parts Suitable for Low-Temperature Service
A353	Pressure Vessel Plates, Alloy Steel, 9 Percent Nickel, Double Normalized and Tempered
A354	Quenched and Tempered Alloy Steel Bolts, Studs, and Other Externally Threaded Fasteners
A358	Electric-Fusion-Welded Austenitic Chromium-Nickel Alloy Stainless Steel Pipe for High-Temperature Service and General Applications
A369	Carbon and Ferritic Alloy Steel Forged and Bored Pipe for High-Temperature Service
A376	Seamless Austenitic Steel Pipe for High-Temperature Central-Station Service
A381	Metal-Arc-Welded Steel Pipe for Use with High-Pressure Transmission Systems
A387	Pressure Vessel Plates, Alloy Steel, Chromium-Molybdenum
A395	Ferritic Ductile Iron Pressure-Retaining Castings for Use at Elevated Temperatures
A403	Wrought Austenitic Stainless Steel Piping Fittings
A409	Welded Large Diameter Austenitic Steel Pipe for Corrosive or High-Temperature Service
A420	Piping Fittings of Wrought Carbon Steel and Alloy Steel for Low-Temperature Service
A426	Centrifugally Cast Ferritic Alloy Steel Pipe for High-Temperature Service
A437	Alloy-Steel Turbine-Type Bolting Material Specifically Heat Treated for High-Temperature Service
A451	Centrifugally Cast Austenitic Steel Pipe for High-Temperature Service
A453	High Temperature Bolting Materials, with Expansion Coefficients Comparable to Austenitic Stainless Steels

Copyright © 2015 by the American Society of Mechanical Engineers.
No reproduction may be made of this material without written consent of ASME.

Specification Index for Appendix A (Cont'd) (14)

Spec. No.	Title
ASTM (Cont'd)	
A479	Stainless Steel Bars and Shapes for Use in Boilers and Other Pressure Vessels
A487	Steel Castings Suitable for Pressure Service
A494	Castings, Nickel and Nickel Alloy
A515	Pressure Vessel Plates, Carbon Steel, for Intermediate- and Higher-Temperature Service
A516	Pressure Vessel Plates, Carbon Steel, for Moderate- and Lower-Temperature Service
A524	Seamless Carbon Steel Pipe for Atmospheric and Lower Temperatures
A537	Pressure Vessel Plates, Heat-Treated, Carbon-Manganese-Silicon Steel
A553	Pressure Vessel Plates, Alloy Steel, Quenched and Tempered 8 and 9 Percent Nickel
A563	Carbon and Alloy Steel Nuts
A570	Steel Sheet and Strip, Carbon Hot-Rolled
A571	Austenitic Ductile Iron Castings for Pressure-Containing Parts Suitable for Low-Temperature Service
A587	Electric-Resistance-Welded Low-Carbon Steel Pipe for the Chemical Industry
A645	Pressure Vessel Plates, Five Percent Nickel Alloy Steel, Specially Heat Treated
A671	Electric-Fusion-Welded Steel Pipe for Atmospheric and Lower Temperatures
A672	Electric-Fusion-Welded Steel Pipe for High-Pressure Service at Moderate Temperatures
A675	Steel Bars, Carbon, Hot-Wrought, Special Quality, Mechanical Properties
A691	Carbon and Alloy Steel Pipe, Electric Fusion-Welded for High-Pressure Service at High Temperatures
A696	Steel Bars, Carbon, Hot-Wrought or Cold-Finished, Special Quality, for Pressure Piping Components
A789	Seamless and Welded Ferritic/Austenitic Stainless Steel Tubing for General Service
A790	Seamless and Welded Ferritic/Austenitic Stainless Steel Pipe
A813	Single- or Double-Welded Austenitic Stainless Steel Pipe
A814	Cold-Worked Welded Austenitic Stainless Steel Pipe
A815	Wrought Ferritic, Ferritic/Austenitic, and Martensitic Stainless Steel Piping Fittings
A992	Structural Steel Shapes
A1010	Higher Strength Martensitic Stainless Steel Plate, Sheet, and Strip
A1053	Welded Ferritic-Martensitic Stainless Steel Pipe
B21	Naval Brass Rod, Bar, and Shapes
B26	Aluminum-Alloy Sand Castings
B42	Seamless Copper Pipe, Standard Sizes
B43	Seamless Red Brass Pipe, Standard Sizes
B61	Steam or Valve Bronze Castings
ASTM (Cont'd)	
B62	Composition Bronze or Ounce Metal Castings
B68	Seamless Copper Tube, Bright Annealed
B75	Seamless Copper Tube
B88	Seamless Copper Water Tube
B96	Copper-Silicon Alloy Plate, Sheet, Strip, and Rolled Bar for General Purposes and Pressure Vessels
B98	Copper-Silicon Alloy Rod, Bar and Shapes
B127	Nickel-Copper Alloy (UNS N04400) Plate, Sheet, and Strip
B133	Copper Rod, Bar and Shapes
B148	Aluminum-Bronze Sand Castings
B150	Aluminum-Bronze Rod, Bar and Shapes
B152	Copper Sheet, Strip, Plate and Rolled Bar
B160	Nickel Rod and Bar
B161	Nickel Seamless Pipe and Tube
B162	Nickel Plate, Sheet and Strip
B164	Nickel-Copper Alloy Rod, Bar and Wire
B165	Nickel-Copper Alloy (UNS N04400) Seamless Pipe and Tube
B166	Nickel-Chromium-Iron Alloys (UNS N06600, N06601, N06603, N06690, N06693, N06025, and N06045) and Nickel-Chromium-Cobalt-Molybdenum Alloy (UNS N06617) Rod, Bar, and Wire
B167	Nickel-Chromium-Iron Alloys (UNS N06600, N06601, N06603, N06690, N06693, N06025, and N06045) and Nickel-Chromium-Cobalt-Molybdenum Alloy (UNS N06617) Seamless Pipe and Tube
B168	Nickel-Chromium-Iron Alloys (UNS N06600, N06601, N06603, N06690, N06693, N06025, and N06045) and Nickel-Chromium-Cobalt-Molybdenum Alloy (UNS N06617) Plate, Sheet, and Strip
B169	Aluminum-Bronze Sheet, Strip, and Rolled Bar
B171	Copper-Alloy Plate and Sheet for Pressure Vessels, Condensers, and Heat Exchangers
B187	Copper, Bus Bar, Rod, and Shapes and General Purpose Rod, Bar, and Shapes
B209	Aluminum and Aluminum-Alloy Sheet and Plate
B210	Aluminum and Aluminum-Alloy Drawn Seamless Tubes
B211	Aluminum and Aluminum-Alloy Bars, Rods, and Wire
B221	Aluminum and Aluminum-Alloy Extruded Bars, Rods, Wire, Profiles, and Tubes
B241	Aluminum and Aluminum-Alloy Seamless Pipe and Seamless Extruded Tube
B247	Aluminum and Aluminum-Alloy Die Forgings, Hand Forgings, and Rolled Ring Forgings
B265	Titanium and Titanium Alloy Strip, Sheet, and Plate
B280	Seamless Copper Tube for Air Conditioning and Refrigeration Field Service
B283	Copper and Copper-Alloy Die Forgings (Hot-Pressed)
B333	Nickel-Molybdenum Alloy Plate, Sheet, and Strip
B335	Nickel-Molybdenum Alloy Rod

Copyright © 2015 by the American Society of Mechanical Engineers.
No reproduction may be made of this material without written consent of ASME.

(14)

Specification Index for Appendix A (Cont'd)

Spec. No.	Title
ASTM (Cont'd)	
B338	Seamless and Welded Titanium and Titanium Alloy Tubes for Condensers and Heat Exchangers
B345	Aluminum and Aluminum-Alloy Seamless Pipe and Seamless Extruded Tube for Gas and Oil Transmission and Distribution Piping Systems
B361	Factory-Made Wrought Aluminum and Aluminum-Alloy Welding Fittings
B363	Seamless and Welded Unalloyed Titanium and Titanium Alloy Welding Fittings
B366	Factory-Made Wrought Nickel and Nickel Alloy Fittings
B371	Copper-Zinc-Silicon Alloy Rod
B381	Titanium and Titanium Alloy Forgings
B407	Nickel-Iron-Chromium Alloy Seamless Pipe and Tube
B409	Nickel-Iron-Chromium Alloy Plate, Sheet, and Strip
B423	Nickel-Iron-Chromium-Molybdenum-Copper Alloy (UNS N08825 and N08221) Seamless Pipe and Tube
B424	Nickel-Iron-Chromium-Molybdenum-Copper Alloy (UNS N08825 and N08221) Plate, Sheet and Strip
B425	Nickel-Iron-Chromium-Molybdenum-Copper Alloy (UNS N08825 and N08221) Rod and Bar
B435	UNS N06022, UNS N06230, and UNS R30556 Plate, Sheet, and Strip
B443	Nickel-Chromium-Molybdenum-Columbium Alloy (UNS N06625) and Nickel-Chromium-Molybdenum-Silicon Alloy (UNS N06219) Plate, Sheet, and Strip
B444	Nickel-Chromium-Molybdenum-Columbium Alloys (UNS N06625 and UNS N06852) and Nickel-Chromium-Molybdenum-Silicon Alloy (UNS N06219) Pipe and Tube
B446	Nickel-Chromium-Molybdenum-Columbium Alloy (UNS N06625), Nickel-Chromium-Molybdenum-Silicon Alloy (UNS N06219), and Nickel-Chromium-Molybdenum-Tungsten Alloy (UNS N06650) Rod and Bar
B462	Forged or Rolled UNS N06030, UNS N06022, UNS N06035, UNS N06200, UNS N06059, UNS N06686, UNS N08020, UNS N08024. UNS N08026, UNS N08367, UNS N10276, UNS N10665, UNS N10675, UNS N10629, UNS N08031, UNS N06045, UNS N06025, and UNS R20033 Alloy Pipe Flanges, Forged Fittings, and Valves and Parts for Corrosive High-Temperature Service
B463	UNS N08020, UNS N08026, and UNS N08024 Alloy Plate, Sheet, and Strip
B464	Welded UNS N08020, N08024, and N08026 Alloy Pipe
B466	Seamless Copper-Nickel Pipe and Tube
B467	Welded Copper-Nickel Pipe
B491	Aluminum and Aluminum Alloy Extruded Round Tubes for General-Purpose Applications
B493	Zirconium and Zirconium Alloy Forgings
ASTM (Cont'd)	
B514	Welded Nickel-Iron-Chromium Alloy Pipe
B517	Welded Nickel-Chromium-Iron Alloy (UNS N06600, UNS N06603, UNS N06025, and UNS N06045) Pipe
B523	Seamless and Welded Zirconium and Zirconium Alloy Tubes
B547	Aluminum and Aluminum-Alloy Formed and Arc-Welded Round Tube
B550	Zirconium and Zirconium Alloy Bar and Wire
B551	Zirconium and Zirconium Alloy Strip, Sheet, and Plate
B564	Nickel Alloy Forgings
B574	Low-Carbon Nickel-Molybdenum-Chromium Alloy Rod
B575	Low-Carbon Nickel-Molybdenum-Chromium Alloy Plate, Sheet and Strip
B581	Nickel-Chromium-Iron-Molybdenum-Copper Alloy Rod
B582	Nickel-Chromium-Iron-Molybdenum-Copper Alloy Plate, Sheet and Strip
B584	Copper Alloy Sand Castings for General Applications
B619	Welded Nickel and Nickel-Cobalt Alloy Pipe
B620	Nickel-Iron-Chromium-Molybdenum Alloy (UNS N08320) Plate, Sheet and Strip
B621	Nickel-Iron-Chromium-Molybdenum Alloy (UNS N08320) Rod
B622	Seamless Nickel and Nickel-Cobalt Alloy Pipe and Tube
B625	Nickel Alloy Plate and Sheet
B626	Welded Nickel and Nickel-Cobalt Alloy Tube
B649	Ni-Fe-Cr-Mo-Cu Low Carbon Alloy (UNS N08904) and Ni-Fe-Cr-Mo-Cu-N Low Carbon Alloy UNS N08925, UNS N08031, and UNS N08926) Bar and Wire
B658	Seamless and Welded Zirconium and Zirconium Alloy Pipe
B668	UNS N08028 Seamless Pipe and Tube
B675	UNS N08366 and UNS N08367 Welded Pipe
B688	Chromium-Nickel-Molybdenum-Iron (UNS N08366 and UNS N08367) Plate, Sheet, and Strip
B690	Iron-Nickel-Chromium-Molybdenum Alloys (UNS N08366 and UNS N08367) Seamless Pipe and Tube
B705	Nickel-Alloy (UNS N06625 and N08825) Welded Pipe
B709	Iron-Nickel-Chromium-Molybdenum Alloy (UNS N08028) Plate, Sheet, and Strip
B725	Welded Nickel (UNS N02200/UNS N02201) and Nickel-Copper Alloy (UNS N04400) Pipe
B729	Seamless UNS N08020, UNS N08026, UNS N08024 Nickel-Alloy Pipe and Tube
B804	UNS N08367 Welded Pipe
B861	Titanium and Titanium Alloy Seamless Pipe
B862	Titanium and Titanium Alloy Welded Pipe
E112	Methods for Determining Average Grain Size
API	
5L	Line Pipe

GENERAL NOTE: It is not practical to refer to a specific edition of each standard throughout the Code text. Instead, the approved edition references, along with the names and addresses of the sponsoring organizations, are shown in Appendix E.

Copyright © 2015 by the American Society of Mechanical Engineers.
No reproduction may be made of this material without written consent of ASME.

NOTES FOR TABLES A-1, A-1M, A-1A, A-1B, A-2, AND A-2M (14)

GENERAL NOTES:

(a) The allowable stress values, P-Number assignments, weld joint and casting quality factors, and minimum temperatures in Tables A-1, A-1A, A-1B, and A-2, together with the referenced Notes in the stress tables, are requirements of this Code.

(b) Notes (1) through (7) are referenced in column headings and in body headings for material type and product form; Notes (8) and following are referenced in the Notes column for specific materials. Notes marked with an asterisk (*) restate requirements found in the text of the Code.

(c) At this time, metric equivalents are partly provided in Tables A-1M and A-2M. For this Edition, the metric values in Tables A-1M and A-2M are for information only. The values in Tables A-1 and A-2 are the required values. To convert stress values in Tables A-1 and A-2 to MPa at a given temperature in °C, determine the equivalent temperature in °F and interpolate to calculate the stress value in ksi at the given temperature. Multiply that value by 6.895 to determine basic allowable stress, *S*, in MPa at the given temperature.

(d) For copper and copper alloys, the following symbols are used in the Temper column: H = drawn; H01 = quarter hard; H02 = half hard; H06 = extra hard; H55 = light drawn; H58 = drawn, general purpose; H80 = hard drawn; HR50 = drawn, stress relieved; M20 = hot rolled; O25 = hot rolled, annealed; O50 = light annealed; O60 = soft annealed; O61 = annealed; WO50 = welded, annealed; and WO61 = welded, fully finished, annealed.

(e) For nickel and nickel alloys, the following abbreviations are used in the Class column: ann., annealed; C.D., cold worked; forg., forged; H.F., hot finished; H.R., hot rolled; H.W., hot worked; plt., plate; R., rolled; rel., relieved; sol., solution; str., stress; and tr., treated.

(f) In Table A-1M, the following abbreviations are used in the Product Form column: forg., forgings; ftg., fittings; pl., plate; shps., shapes; sht., sheet; smls., seamless; and wld., welded.

NOTES:

(1) *The stress values in Tables A-1 and A-1M, and the design stress values in Tables A-2 and A-2M, are basic allowable stresses in tension in accordance with para. 302.3.1(a). For pressure design, the stress values from Tables A-1 and A-1M are multiplied by the appropriate quality factor E (E_c from Table A-1A or E_j from Table A-1B). Stress values in shear and bearing are stated in para. 302.3.1(b); those in compression in para. 302.3.1(c).

(2) *The quality factors for castings E_c in Table A-1A are basic factors in accordance with para. 302.3.3(b). The quality factors for longitudinal weld joints E_j in Table A-1B are basic factors in accordance with para. 302.3.4(a). See paras. 302.3.3(c) and 302.3.4(b) for enhancement of quality factors. See also para. 302.3.1(a), footnote 1.

(3) The stress values for austenitic stainless steels in these Tables may not be applicable if the material has been given a final heat treatment other than that required by the material specification or by reference to Note (30) or (31).

(4a) *In Table A-1, stress values printed in *italics* exceed two-thirds of the expected yield strength at temperature. Stress values in **boldface** are equal to 90% of expected yield strength at temperature. See paras. 302.3.2(d)(3) and (e).

(4b) *In Table A-1M, stress values printed in *italics* are tensile-controlled values. Yield-controlled stress values are in normal font and time-dependent stress values are in **boldface.**

(5) *See para. 328.2.1(f) for description of P-Number groupings. P-Numbers are indicated by number or by a number followed by a letter (e.g., 8, 5B, or 11A).

(6) *The minimum temperature shown is that design minimum temperature for which the material is normally suitable without impact testing other than that required by the material specification. However, the use of a material at a design minimum temperature below −29°C (−20°F) is established by rules elsewhere in this Code, including para. 323.2.2(a) and other impact test requirements. For carbon steels with a letter designation in the Min. Temp. column, see para. 323.2.2(b) and the applicable curve and Notes in Fig. 323.2.2A.

(7) The letter "a" indicates alloys that are not recommended for welding and that, if welded, must be individually qualified. The letter "b" indicates copper base alloys that must be individually qualified.

(8) *There are restrictions on the use of this material in the text of the Code as follows:

(a) See para. 305.2.1; temperature limits are −29°C to 186°C (−20°F to 366°F).

(b) See para. 305.2.2; pipe shall be safeguarded when used outside the temperature limits in Note (8a).

(c) See Table 323.2.2, Section B-2.

(d) See para. 323.4.2(a).

(e) See para. 323.4.2(b).

(f) See para. 309.2.1.

(g) See para. 309.2.2.

(9) *For pressure-temperature ratings of components made in accordance with standards listed in Table 326.1, see para. 326.2.1. Stress values in Table A-1 may be used to calculate ratings for unlisted components, and special ratings for listed components, as permitted by para. 303.

(9a) Component standards listed in Table 326.1 impose the following restrictions on this material when used as a forging: composition, properties, heat treatment, and grain size shall conform to this specification: manufacturing procedures, tolerances, tests, certification, and markings shall be in accordance with ASTM B564.

(10) *This casting quality factor is applicable only when proper supplementary examination has been performed (see para. 302.3.3).

(11) *For use under this Code, radiography shall be performed after heat treatment.

(12) *Certain forms of this material, as stated in Table 323.2.2, must be impact tested to qualify for service below −29°C (−20°F). Alternatively, if provisions for impact testing are included in the material specification as supplementary requirements and are invoked, the material may be used

Copyright © 2015 by the American Society of Mechanical Engineers.
No reproduction may be made of this material without written consent of ASME.

down to the temperature at which the test was conducted in accordance with the specification.

(13) Properties of this material vary with thickness or size. Stress values are based on minimum properties for the thickness listed.

(14) For use in Code piping at the stated stress values, the required minimum tensile and yield properties must be verified by tensile test. If such tests are not required by the material specification, they shall be specified in the purchase order.

(15) These stress values are established from a consideration of strength only and will be satisfactory for average service. For bolted joints where freedom from leakage over a long period of time without retightening is required, lower stress values may be necessary as determined from the flexibility of the flange and bolts and corresponding relaxation properties.

(16) An E_j factor of 1.00 may be applied only if all welds, including welds in the base material, have passed 100% radiographic examination. Substitution of ultrasonic examination for radiography is not permitted for the purpose of obtaining an E_j of 1.00.

(17) Filler metal shall not be used in the manufacture of this pipe or tube.

(18) DELETED.

(19) *This specification includes requirements for random radiographic inspection for mill quality control. If the 0.90 joint factor is to be used, the welds shall meet the requirements of Table 341.3.2 for longitudinal butt welds with spot radiography in accordance with Table 302.3.4. This shall be a matter of special agreement between purchaser and manufacturer.

(20) For pipe sizes ≥ DN 200 (NPS 8) with wall thicknesses ≥ Sch 140, the specified minimum tensile strength is 483 MPa (70 ksi).

(21) For material thickness > 127 mm (5 in.), the specified minimum tensile strength is 483 MPa (70 ksi).

(21a) For material thickness > 127 mm (5 in.), the specified minimum tensile strength is 448 MPa (65 ksi).

(22) The minimum tensile strength for weld (qualification) and stress values shown shall be multiplied by 0.90 for pipe having an outside diameter less than 51 mm (2 in.) and a D/t value less than 15. This requirement may be waived if it can be shown that the welding procedure to be used will consistently produce welds that meet the listed minimum tensile strength of 165 MPa (24 ksi).

(23) DELETED.

(24) Yield strength is not stated in the material specification. The value shown is based on yield strengths of materials with similar characteristics.

(25) This steel may develop embrittlement after service at approximately 316°C (600°F) and higher temperature.

(26) This unstabilized grade of stainless steel increasingly tends to precipitate intergranular carbides as the carbon content increases above 0.03%. See also para. F323.4(c)(2).

(27) For temperatures above 427°C (800 °F), these stress values apply only when the carbon content is 0.04% or higher.

(28) For temperatures above 538°C (1,000°F), these stress values apply only when the carbon content is 0.04% or higher.

(29) The stress values above 538°C (1,000°F) listed here shall be used only when the steel's austenitic micrograin size, as defined in ASTM E112, is No. 6 or less (coarser grain). Otherwise, the lower stress values listed for the same material, specification, and grade shall be used.

(30) For temperatures above 538°C (1,000°F), these stress values may be used only if the material has been heat treated at a temperature of 1 093°C (2,000°F) minimum.

(31) For temperatures above 538°C (1,000°F), these stress values may be used only if the material has been heat treated by heating to a minimum temperature of 1 038°C (1,900°F) and quenching in water or rapidly cooling by other means.

(32) Stress values shown are for the lowest strength base material permitted by the specification to be used in the manufacture of this grade of fitting. If a higher strength base material is used, the higher stress values for that material may be used in design.

(33) For welded construction with work hardened grades, use the stress values for annealed material; for welded construction with precipitation hardened grades, use the special stress values for welded construction given in the Tables.

(34) If material is welded, brazed, or soldered, the allowable stress values for the annealed condition shall be used.

(35) This steel is intended for use at high temperatures; it may have low ductility and/or low impact properties at room temperature after being used above the temperature indicated by para. F323.4(c)(4).

(36) The specification permits this material to be furnished without solution heat treatment or with other than a solution heat treatment. When the material has not been solution heat treated, the minimum temperature shall be −29°C (−20°F) unless the material is impact tested in accordance with para. 323.3.

(37) Impact requirements for seamless fittings shall be governed by those listed in this Table for the particular base material specification in the grades permitted (A312, A240, and A182). When A276 materials are used in the manufacture of these fittings, the Notes, minimum temperatures, and allowable stresses for comparable grades of A240 materials shall apply.

(38) DELETED.

(39) This material when used below −29°C (−20°F) shall be impact tested if the carbon content is above 0.10%.

(40) *This casting quality factor can be enhanced by supplementary examination in accordance with para. 302.3.3(c) and Table 302.3.3C. The higher factor from Table 302.3.3C may be substituted for this factor in pressure design equations.

(41) Design stresses for the cold drawn temper are based on hot rolled properties until required data on cold drawn are submitted.

(42) This is a product specification. No design stresses are necessary. Limitations on metal temperature for materials covered by this specification are as follows:

Grade(s)	Metal Temperature, °C (°F)
1	−29 to 482 (−20 to 900)
2, 2H, and 2HM	−48 to 593 (−55 to 1,100)
3	−29 to 593 (−20 to 1,100)
4	−48 to 593 (−55 to 1,100)
4L	−101 to 593 (−150 to 1,100)
6	−29 to 427 (−20 to 800)
7	−48 to 593 (−55 to 1,100)
7L	−101 to 593 (−150 to 1,100)
7M	−48 to 593 (−55 to 1,100)
7ML	−73 to 593 (−100 to 1,100)
8FA [see Note (39)]	−29 to 427 (−20 to 800)
8MA and 8TA	−198 to 816 (−325 to 1,500)
8, 8A, and 8CA	−254 to 816 (−425 to 1,500)

Copyright © 2015 by the American Society of Mechanical Engineers.
No reproduction may be made of this material without written consent of ASME.

(42a) DELETED.

(42b) This is a product specification. No design stresses are necessary. For limitations on usage, see paras. 309.2.1 and 309.2.2.

(43) *The stress values given for this material are not applicable when either welding or thermal cutting is employed [see para. 323.4.2(c)].

(44) This material shall not be welded.

(45) Stress values shown are applicable for "die" forgings only.

(46) Lines of allowable stresses in Table A-1 for all materials in A312 include heavily cold worked (HCW) material as defined in A312 para. 6.1.4.

(47) If no welding is employed in fabrication of piping from these materials, the stress values may be increased to 230 MPa (33.3 ksi).

(48) The stress value to be used for this gray iron material at its upper temperature limit of 232°C (450°F) is the same as that shown in the 204°C (400°F) column.

(49) If the chemical composition of this Grade is such as to render it hardenable, qualification under P-No. 6 is required.

(50) This material is grouped in P-No. 7 because its hardenability is low.

(51) This material may require special consideration for welding qualification. See the BPV Code, Section IX, QW/QB-422. For use in this Code, a qualified WPS is required for each strength level of material.

(52) Copper-silicon alloys are not always suitable when exposed to certain media and high temperature, particularly above 100°C (212°F). The user should satisfy himself that the alloy selected is satisfactory for the service for which it is to be used.

(53) Stress relief heat treatment is required for service above 232°C (450°F).

(54) The maximum operating temperature is arbitrarily set at 260°C (500°F) because hard temper adversely affects design stress in the creep rupture temperature ranges.

(55) Pipe produced to this specification is not intended for high temperature service. The stress values apply to either nonexpanded or cold expanded material in the as-rolled, normalized, or normalized and tempered condition.

(56) Because of thermal instability, this material is not recommended for service above 427°C (800°F).

(57) Conversion of carbides to graphite may occur after prolonged exposure to temperatures over 427°C (800°F). See para. F323.4(b)(2).

(58) Conversion of carbides to graphite may occur after prolonged exposure to temperatures over 468°C (875°F). See para. F323.4(b)(3).

(59) For temperatures above 482°C (900°F), consider the advantages of killed steel. See para. F323.4(b)(4).

(60) For all design temperatures, the maximum hardness shall be Rockwell C35 immediately under the thread roots. The hardness shall be taken on a flat area at least 3 mm ($^1/_8$ in.) across, prepared by removing threads. No more material than necessary shall be removed to prepare the area. Hardness determination shall be made at the same frequency as tensile tests.

(61) Annealed at approximately 982°C (1,800°F).

(62) Annealed at approximately 1 121°C (2,050°F).

(63) For stress relieved tempers (T351, T3510, T3511, T451, T4510, T4511, T651, T6510, T6511), stress values for material in the listed temper shall be used.

(64) The minimum tensile strength of the reduced section tensile specimen in accordance with the BPV Code, Section IX, QW-462.1, shall not be less than 758 MPa (110.0 ksi).

(65) The minimum temperature shown is for the heaviest wall permissible by the specification. The minimum temperature for lighter walls shall be as shown in the following tabulation:

Impact Test Temperature (°C) for Plate Thicknesses Shown

Spec. No. and Grade	51 mm Max.	Over 51 mm to 76 mm
A203 A	−68	−59
A203 B	−68	−59
A203 D	−101	−87
A203 E	−101	−87

Impact Test Temperature (°F) for Plate Thicknesses Shown

Spec. No. and Grade	2 in. Max.	Over 2 in. to 3 in.
A203 A	−90	−75
A203 B	−90	−75
A203 D	−150	−125
A203 E	−150	−125

(66) Stress values shown are 90% of those for the corresponding core material.

(67) For use under this Code, the heat treatment requirements for pipe manufactured to A671, A672, and A691 shall be as required by para. 331 for the particular material being used.

(68) The tension test specimen from plate 12.7 mm ($^1/_2$ in.) and thicker is machined from the core and does not include the cladding alloy; therefore, the stress values listed are those for materials less than 12.7 mm.

(69) This material may be used only in nonpressure applications.

(70) Alloy 625 (UNS N06625) in the annealed condition is subject to severe loss of impact strength at room temperature after exposure in the range of 538°C to 760°C (1,000°F to 1,400°F).

(71) These materials are normally microalloyed with Cb, V, and/or Ti. Supplemental specifications agreed to by manufacturer and purchaser commonly establish chemistry more restrictive than the base specification, as well as plate rolling specifications and requirements for weldability (i.e., C-equivalent) and toughness.

(72) For service temperature > 454°C (850°F), weld metal shall have a carbon content > 0.05%.

(73) Heat treatment is required after welding for all products of zirconium Grade R60705. See Table 331.1.1.

(74) Mechanical properties of fittings made from forging stock shall meet the minimum tensile requirements of one of the bar, forging, or rod specifications listed in Table 2 of B366 for which tensile testing is required.

(75) Stress values shown are for materials in the normalized and tempered condition, or when the heat treatment is unknown. If material is annealed, use the following values above 510°C (950°F):

Temp., °C	538	566	593	621	649
S, MPa	55.1	39.3	26.2	16.5	9.6
Temp., °F	1,000	1,050	1,100	1,150	1,200
S, ksi	8.0	5.7	3.8	2.4	1.4

Copyright © 2015 by the American Society of Mechanical Engineers.
No reproduction may be made of this material without written consent of ASME.

(76) DELETED.

(77) The pipe grades listed below, produced in accordance with CSA (Canadian Standards Association) Z245.1, shall be considered as equivalents to API 5L and treated as listed materials.

Grade Equivalents

API 5L	CSA Z245.1
A25	172
A	207
B	241
X42	290
X46	317
X52	359
X56	386
X60	414
X65	448
X70	483
X80	550

(78) Not permitted for the P4 and P5 materials in Table 302.3.5 for Elevated Temperature Fluid Service.

Copyright © 2015 by the American Society of Mechanical Engineers.
No reproduction may be made of this material without written consent of ASME.

Table A-1 Basic Allowable Stresses in Tension for Metals (14)

Numbers in Parentheses Refer to Notes for Appendix A Tables; Specifications Are ASTM Unless Otherwise Indicated

Material	Spec. No.	Type/ Grade	UNS No.	Class/ Condition/ Temper	Notes	Min. Temp., °F (6)	Specified Min. Strength, ksi Tensile	Specified Min. Strength, ksi Yield	Basic Allowable Stress, *S*, ksi, at Metal Temperature, °F [Note (1)] Min. Temp. to 100	200	300	400	500	600	650
Iron															
Castings (2)															
Gray	A48	20	F11401	. . .	(8e)(48)	−20	20	. . .	2.0	2.0	2.0	2.0	. . .	. . .	. . .
Gray	A278	20	F11401	. . .	(8e)(48)	−20	20	. . .	2.0	2.0	2.0	2.0	. . .	. . .	. . .
Gray	A126	A	F11501	. . .	(8e)(9)(48)	−20	21	. . .	2.0	2.0	2.0	2.0	. . .	. . .	. . .
Gray	A48	25	F11701	. . .	(8e)(48)	−20	25	. . .	2.5	2.5	2.5	2.5	. . .	. . .	. . .
Gray	A278	25	F11701	. . .	(8e)(48)	−20	25	. . .	2.5	2.5	2.5	2.5	. . .	. . .	. . .
Gray	A48	30	F12101	. . .	(8e)(48)	−20	30	. . .	3.0	3.0	3.0	3.0	. . .	. . .	. . .
Gray	A278	30	F12101	. . .	(8e)(48)	−20	30	. . .	3.0	3.0	3.0	3.0	. . .	. . .	. . .
Gray	A126	B	F12102	. . .	(8e)(9)(48)	−20	31	. . .	3.0	3.0	3.0	3.0	. . .	. . .	. . .
Gray	A48	35	F12401	. . .	(8e)(48)	−20	35	. . .	3.5	3.5	3.5	3.5	. . .	. . .	. . .
Gray	A278	35	F12401	. . .	(8e)(48)	−20	35	. . .	3.5	3.5	3.5	3.5	. . .	. . .	. . .
Gray	A48	40	F12801	. . .	(8e)(9)(48)	−20	40	. . .	4.0	4.0	4.0	4.0	. . .	. . .	. . .
Gray	A126	C	F12802	. . .	(8e)(9)(48)	−20	41	. . .	4.0	4.0	4.0	4.0	. . .	. . .	. . .
Gray	A278	40	F12803	. . .	(8e)(9)(53)	−20	40	. . .	4.0	4.0	4.0	4.0	4.0	4.0	4.0
Gray	A48	45	F13101	. . .	(8e)(48)	−20	45	. . .	4.5	4.5	4.5	4.5	. . .	. . .	. . .
Gray	A48	50	F13501	. . .	(8e)(48)	−20	50	. . .	5.0	5.0	5.0	5.0	. . .	. . .	. . .
Gray	A278	50	F13502	. . .	(8e)(53)	−20	50	. . .	5.0	5.0	5.0	5.0	5.0	5.0	5.0
Gray	A48	55	F13801	. . .	(8e)(48)	−20	55	. . .	5.5	5.5	5.5	5.5	. . .	. . .	. . .
Gray	A48	60	F14101	. . .	(8e)(48)	−20	60	. . .	6.0	6.0	6.0	6.0	. . .	. . .	. . .
Gray	A278	60	F14102	. . .	(8e)(53)	−20	60	. . .	6.0	6.0	6.0	6.0	6.0	6.0	6.0
Cupola malleable	A197	. . .	F22000	. . .	(8e)(9)	−20	40	30	8.0	8.0	8.0	8.0	8.0	8.0	8.0
Malleable	A47	32510	F22200	. . .	(8e)(9)	−20	50	32.5	10.0	10.0	10.0	10.0	10.0	10.0	10.0
Ferritic ductile	A395	60-40-18	F32800	. . .	(8d)(9)	−20	60	40	20.0	19.0	17.9	16.9	15.9	14.9	14.1
Austenitic ductile	A571	D-2M	F43010	1	(8d)	−20	65	30	20.0	. . .	. . .	. . .	. . .	. . .	. . .

Copyright © 2015 by the American Society of Mechanical Engineers.
No reproduction may be made of this material without written consent of ASME.

(14) **Table A-1 Basic Allowable Stresses in Tension for Metals (Cont'd)**

Numbers in Parentheses Refer to Notes for Appendix A Tables; Specifications Are ASTM Unless Otherwise Indicated

Material	Spec. No.	Type/ Grade	UNS No.	Class/ Condition/ Temper	Size, in.	P-No. (5)	Notes	Min. Temp., °F (6)	Specified Min. Strength, ksi Tensile	Specified Min. Strength, ksi Yield	Min. Temp. to 100	200	300
Carbon Steel													
Pipes and Tubes (2)													
A285 Gr. A	A134	. . .	. . .	. . .	. . .	1	(8b)(57)	B	45	24	15.0	14.7	14.2
A285 Gr. A	A672	A45	K01700	. . .	. . .	1	(57)(59)(67)	B	45	24	15.0	14.7	14.2
Butt weld	API 5L	A25	. . .	. . .	. . .	1	(8a)(77)	−20	45	25	15.0	15.0	14.7
Smls & ERW	API 5L	A25	. . .	. . .	. . .	1	(57)(59)(77)	B	45	25	15.0	15.0	14.7
. . .	A179	. . .	K01200	. . .	. . .	1	(57)(59)	−20	47	26	15.7	15.7	15.3
Type F	A53	A	K02504	. . .	. . .	1	(8a)	20	48	30	16.0	16.0	16.0
. . .	A139	A	. . .	. . .	. . .	1	(8b)	A	48	30	16.0	16.0	16.0
. . .	A587	. . .	K11500	. . .	. . .	1	(57)(59)	−20	48	30	16.0	16.0	16.0
. . .	A53	A	K02504	. . .	. . .	1	(57)(59)	B	48	30	16.0	16.0	16.0
. . .	A106	A	K02501	. . .	. . .	1	(57)	B	48	30	16.0	16.0	16.0
. . .	A135	A	. . .	. . .	. . .	1	(57)(59)	B	48	30	16.0	16.0	16.0
. . .	A369	FPA	K02501	. . .	. . .	1	(57)	B	48	30	16.0	16.0	16.0
. . .	API 5L	A	. . .	. . .	. . .	1	(57)(59)(77)	B	48	30	16.0	16.0	16.0
A285 Gr. B	A134	. . .	. . .	. . .	. . .	1	(8b)(57)	B	50	27	16.7	16.5	15.9
A285 Gr. B	A672	A50	K02200	. . .	. . .	1	(57)(59)(67)	B	50	27	16.7	16.5	15.9
A285 Gr. C	A134	. . .	. . .	. . .	. . .	1	(8b)(57)	A	55	30	18.3	18.3	17.7
. . .	A524	II	K02104	. . .	. . .	1	(57)	−20	55	30	18.3	18.3	17.7
. . .	A333	1	K03008	. . .	. . .	1	(57)(59)	−50	55	30	18.3	18.3	17.7
. . .	A334	1	K03008	. . .	. . .	1	(57)(59)	−50	55	30	18.3	18.3	17.7
A285 Gr. C	A671	CA55	K02801	. . .	. . .	1	(59)(67)	A	55	30	18.3	18.3	17.7
A285 Gr. C	A672	A55	K02801	. . .	. . .	1	(57)(59)(67)	A	55	30	18.3	18.3	17.7
A516 Gr. 55	A672	C55	K01800	. . .	. . .	1	(57)(67)	C	55	30	18.3	18.3	17.7
A516 Gr. 60	A671	CC60	K02100	. . .	. . .	1	(57)(67)	C	60	32	20.0	19.5	18.9
A515 Gr. 60	A671	CB60	K02401	. . .	. . .	1	(57)(67)	B	60	32	20.0	19.5	18.9
A515 Gr. 60	A672	B60	K02401	. . .	. . .	1	(57)(67)	B	60	32	20.0	19.5	18.9
A516 Gr. 60	A672	C60	K02100	. . .	. . .	1	(57)(67)	C	60	32	20.0	19.5	18.9
. . .	A139	B	K03003	. . .	. . .	1	(8b)	A	60	35	20.0	20.0	20.0
. . .	A135	B	K03018	. . .	. . .	1	(57)(59)	B	60	35	20.0	20.0	20.0
. . .	A524	I	K02104	. . .	. . .	1	(57)	−20	60	35	20.0	20.0	20.0
. . .	A53	B	K03005	. . .	. . .	1	(57)(59)	B	60	35	20.0	20.0	20.0
. . .	A106	B	K03006	. . .	. . .	1	(57)	B	60	35	20.0	20.0	20.0
. . .	A333	6	K03006	. . .	. . .	1	(57)	−50	60	35	20.0	20.0	20.0
. . .	A334	6	K03006	. . .	. . .	1	(57)	−50	60	35	20.0	20.0	20.0
. . .	A369	FPB	K03006	. . .	. . .	1	(57)	−20	60	35	20.0	20.0	20.0
. . .	A381	Y35	. . .	. . .	. . .	1	. . .	A	60	35	20.0	20.0	20.0
. . .	API 5L	B	. . .	. . .	. . .	1	(57)(59)(77)	B	60	35	20.0	20.0	20.0

Copyright © 2015 by the American Society of Mechanical Engineers.
No reproduction may be made of this material without written consent of ASME.

Table A-1 Basic Allowable Stresses in Tension for Metals (Cont'd)

Numbers in Parentheses Refer to Notes for Appendix A Tables; Specifications Are ASTM Unless Otherwise Indicated

Basic Allowable Stress, *S*, ksi, at Metal Temperature, °F [Note (1)]														
400	500	600	650	700	750	800	850	900	950	1,000	1,050	1,100	Type/ Grade	Spec. No.
														Carbon Steel Pipes and Tubes (2)
13.7	13.0	12.3	11.9	11.5	10.7	9.2	7.9	5.9	. . .	. . .	. . .	. . .	. . .	A134
13.7	13.0	12.3	11.9	11.5	10.7	9.2	7.9	5.9	4.0	2.5	1.6	1.0	A45	A672
14.2	. . .	. . .	. . .	. . .	. . .	. . .	. . .	. . .	. . .	. . .	. . .	. . .	A25	API 5L
14.2	. . .	. . .	. . .	. . .	. . .	. . .	. . .	. . .	. . .	. . .	. . .	. . .	A25	API 5L
14.8	14.1	13.3	12.8	12.4	10.7	9.2	7.9	5.9	4.0	2.5	1.6	1.0	. . .	A179
16.0	. . .	. . .	. . .	. . .	. . .	. . .	. . .	. . .	. . .	. . .	. . .	. . .	A	A53
. . .	. . .	. . .	. . .	. . .	. . .	. . .	. . .	. . .	. . .	. . .	. . .	. . .	A	A139
16.0	16.0	15.3	14.6	12.5	10.7	9.2	7.9	. . .	. . .	. . .	. . .	. . .	. . .	A587
16.0	16.0	15.3	14.6	12.5	10.7	9.2	7.9	5.9	4.0	2.5	1.6	1.0	A	A53
16.0	16.0	15.3	14.6	12.5	10.7	9.2	7.9	5.9	4.0	2.5	1.6	1.0	A	A106
16.0	16.0	15.3	14.6	12.5	10.7	9.2	7.9	5.9	4.0	2.5	1.6	1.0	A	A135
16.0	16.0	15.3	14.6	12.5	10.7	9.2	7.9	5.9	4.0	2.5	1.6	1.0	FPA	A369
16.0	16.0	15.3	14.6	12.5	10.7	9.2	7.9	5.9	4.0	2.5	1.6	1.0	A	API 5L
15.4	14.7	13.8	13.3	12.5	10.7	9.2	7.9	5.9	. . .	. . .	. . .	. . .	. . .	A134
15.4	14.7	13.8	13.3	12.5	10.7	9.2	7.9	5.9	4.0	2.5	1.6	1.0	A50	A672
17.1	16.3	15.3	14.8	14.3	13.0	10.8	8.7	5.9	. . .	. . .	. . .	. . .	. . .	A134
17.1	16.3	15.3	14.8	14.3	13.0	10.8	8.7	5.9	4.0	2.5	. . .	. . .	II	A524
17.1	16.3	15.3	14.8	14.3	13.0	10.8	8.7	5.9	4.0	2.5	1.6	1.0	1	A333
17.1	16.3	15.3	14.8	14.3	13.0	10.8	8.7	5.9	4.0	2.5	1.6	1.0	1	A334
17.1	16.3	15.3	14.8	14.3	13.0	10.8	8.7	5.9	4.0	2.5	1.6	1.0	CA55	A671
17.1	16.3	15.3	14.8	14.3	13.0	10.8	8.7	5.9	4.0	2.5	1.6	1.0	A55	A672
17.1	16.3	15.3	14.8	14.3	13.0	10.8	8.7	5.9	4.0	2.5	1.6	1.0	C55	A672
18.2	17.4	16.4	15.8	15.3	13.9	11.4	8.7	5.9	4.0	2.5	. . .	. . .	CC60	A671
18.2	17.4	16.4	15.8	15.3	13.9	11.4	8.7	5.9	4.0	2.5	1.6	1.0	CB60	A671
18.2	17.4	16.4	15.8	15.3	13.9	11.4	8.7	5.9	4.0	2.5	1.6	1.0	B60	A672
18.2	17.4	16.4	15.8	15.3	13.9	11.4	8.7	5.9	4.0	2.5	1.6	1.0	C60	A672
. . .	. . .	. . .	. . .	. . .	. . .	. . .	. . .	. . .	. . .	. . .	. . .	. . .	B	A139
19.9	19.0	17.9	17.3	16.7	13.9	11.4	8.7	5.9	4.0	2.5	. . .	. . .	B	A135
19.9	19.0	17.9	17.3	16.7	13.9	11.4	8.7	5.9	4.0	2.5	. . .	. . .	I	A524
19.9	19.0	17.9	17.3	16.7	13.9	11.4	8.7	5.9	4.0	2.5	1.6	1.0	B	A53
19.9	19.0	17.9	17.3	16.7	13.9	11.4	8.7	5.9	4.0	2.5	1.6	1.0	B	A106
19.9	19.0	17.9	17.3	16.7	13.9	11.4	8.7	5.9	4.0	2.5	1.6	1.0	6	A333
19.9	19.0	17.9	17.3	16.7	13.9	11.4	8.7	5.9	4.0	2.5	1.6	1.0	6	A334
19.9	19.0	17.9	17.3	16.7	13.9	11.4	8.7	5.9	4.0	2.5	1.6	1.0	FPB	A369
19.9	19.0	17.9	17.3	16.7	13.9	11.4	8.7	5.9	4.0	2.5	1.6	1.0	Y35	A381
19.9	19.0	17.9	17.3	16.7	13.9	11.4	8.7	5.9	4.0	2.5	1.6	1.0	B	API 5L

Copyright © 2015 by the American Society of Mechanical Engineers.
No reproduction may be made of this material without written consent of ASME.

(14) **Table A-1 Basic Allowable Stresses in Tension for Metals (Cont'd)**

Numbers in Parentheses Refer to Notes for Appendix A Tables; Specifications Are ASTM Unless Otherwise Indicated

Material	Spec. No.	Type/ Grade	UNS No.	Class/ Condition/ Temper	Size, in.	P-No. (5)	Notes	Min. Temp., °F (6)	Specified Min. Strength, ksi Tensile	Specified Min. Strength, ksi Yield	Min. Temp. to 100	200	300
Carbon Steel (Cont'd)													
Pipes and Tubes (2) (Cont'd)													
. . .	A139	C	K03004	. . .	. . .	1	(8b)	A	60	42	20.0	20.0	20.0
. . .	A139	D	K03010	. . .	. . .	1	(8b)	A	60	46	20.0	20.0	20.0
. . .	API 5L	X42	. . .	. . .	. . .	1	(55)(77)	A	60	42	20.0	20.0	20.0
. . .	A381	Y42	. . .	. . .	. . .	1	. . .	A	60	42	20.0	20.0	20.0
. . .	A381	Y48	. . .	. . .	. . .	1	. . .	A	62	48	20.7	20.7	20.7
. . .	API 5L	X46	. . .	. . .	. . .	1	(55)(77)	A	63	46	21.0	21.0	21.0
. . .	A381	Y46	. . .	. . .	. . .	1	. . .	A	63	46	21.0	21.0	21.0
. . .	A381	Y50	. . .	. . .	. . .	1	. . .	A	64	50	21.3	21.3	21.3
A516 Gr. 65	A671	CC65	K02403	. . .	. . .	1	(57)(67)	B	65	35	21.7	21.4	20.6
A515 Gr. 65	A671	CB65	K02800	. . .	. . .	1	(57)(67)	A	65	35	21.7	21.4	20.6
A515 Gr. 65	A672	B65	K02800	. . .	. . .	1	(57)(67)	A	65	35	21.7	21.4	20.6
A516 Gr. 65	A672	C65	K02403	. . .	. . .	1	(57)(67)	B	65	35	21.7	21.4	20.6
. . .	A139	E	K03012	. . .	. . .	1	(8b)	A	66	52	22.0	22.0	22.0
. . .	API 5L	X52	. . .	. . .	. . .	1	(55)(77)	A	66	52	22.0	22.0	22.0
. . .	A381	Y52	. . .	. . .	. . .	1	. . .	A	66	52	22.0	22.0	22.0
A516 Gr. 70	A671	CC70	K02700	. . .	. . .	1	(57)(67)	B	70	38	23.3	23.2	22.4
A515 Gr. 70	A671	CB70	K03101	. . .	. . .	1	(57)(67)	A	70	38	23.3	23.2	22.4
A515 Gr. 70	A672	B70	K03101	. . .	. . .	1	(57)(67)	A	70	38	23.3	23.2	22.4
A516 Gr. 70	A672	C70	K02700	. . .	. . .	1	(57)(67)	B	70	38	23.3	23.2	22.4
. . .	A106	C	K03501	. . .	. . .	1	(57)	B	70	40	23.3	23.3	23.3
A537 Cl. 1	A671	CD70	K12437	. . .	≤ 2½ thk.	1	(67)	D	70	50	23.3	23.3	22.8
A537 Cl. 1	A672	D70	K12437	. . .	≤ 2½ thk.	1	(67)	D	70	50	23.3	23.3	22.8
A537 Cl. 1	A691	CMSH-70	K12437	. . .	≤ 2½ thk.	1	(67)	D	70	50	23.3	23.3	22.8
. . .	API 5L	X56	. . .	. . .	. . .	1	(51)(55)(71)(77)	A	71	56	23.7	23.7	23.7
. . .	A381	Y56	. . .	. . .	. . .	1	(51)(55)(71)	A	71	56	23.7	23.7	23.7
A299 Gr. A	A671	CK75	K02803	. . .	> 1 thk.	1	(57)(67)	A	75	40	25.0	24.4	23.6
A299 Gr. A	A672	N75	K02803	. . .	> 1 thk.	1	(57)(67)	A	75	40	25.0	24.4	23.6
A299 Gr. A	A691	CMS-75	K02803	. . .	> 1 thk.	1	(57)(67)	A	75	40	25.0	24.4	23.6
A299 Gr. A	A671	CK75	K02803	. . .	≤ 1 thk.	1	(57)(67)	A	75	42	25.0	25.0	24.8
A299 Gr. A	A672	N75	K02803	. . .	≤ 1 thk.	1	(57)(67)	A	75	42	25.0	25.0	24.8
A299 Gr. A	A691	CMS-75	K02803	. . .	≤ 1 thk.	1	(57)(67)	A	75	42	25.0	25.0	24.8

Copyright © 2015 by the American Society of Mechanical Engineers.
No reproduction may be made of this material without written consent of ASME.

Table A-1 Basic Allowable Stresses in Tension for Metals (Cont'd)

Numbers in Parentheses Refer to Notes for Appendix A Tables; Specifications Are ASTM Unless Otherwise Indicated

Basic Allowable Stress, *S*, ksi, at Metal Temperature, °F [Note (1)]														
400	500	600	650	700	750	800	850	900	950	1,000	1,050	1,100	Type/ Grade	Spec. No.
													Carbon Steel (Cont'd) Pipes and Tubes (2) (Cont'd)	
...	...	...	...	...	...	...	...	...	...	...	...	...	C	A139
...	...	...	...	...	...	...	...	...	...	...	...	...	D	A139
20.0	...	...	...	...	...	...	...	...	...	...	...	...	X42	API 5L
20.0	...	...	...	...	...	...	...	...	...	...	...	...	Y42	A381
20.7	20.7	20.7	18.7	...	...	...	...	...	...	...	...	...	Y48	A381
21.0	...	...	...	...	...	...	...	...	...	...	...	...	X46	API 5L
21.0	...	...	...	...	...	...	...	...	...	...	...	...	Y46	A381
21.3	21.3	21.3	18.7	...	...	...	...	...	...	...	...	...	Y50	A381
19.9	19.0	17.9	17.3	16.7	13.9	11.4	9.0	6.3	4.0	2.5	...	...	CC65	A671
19.9	19.0	17.9	17.3	16.7	13.9	11.4	9.0	6.3	4.0	2.5	1.6	1.0	CB65	A671
19.9	19.0	17.9	17.3	16.7	13.9	11.4	9.0	6.3	4.0	2.5	1.6	1.0	B65	A672
19.9	19.0	17.9	17.3	16.7	13.9	11.4	9.0	6.3	4.0	2.5	1.6	1.0	C65	A672
...	...	...	...	...	...	...	...	...	...	...	...	...	E	A139
22.0	...	...	...	...	...	...	...	...	...	...	...	...	X52	API 5L
22.0	...	...	...	...	...	...	...	...	...	...	...	...	Y52	A381
21.6	20.6	19.4	18.8	18.1	14.8	12.0	9.3	6.7	4.0	2.5	...	...	CC70	A671
21.6	20.6	19.4	18.8	18.1	14.8	12.0	9.3	6.7	4.0	2.5	1.6	1.0	CB70	A671
21.6	20.6	19.4	18.8	18.1	14.8	12.0	9.3	6.7	4.0	2.5	1.6	1.0	B70	A672
21.6	20.6	19.4	18.8	18.1	14.8	12.0	9.3	6.7	4.0	2.5	1.6	1.0	C70	A672
22.8	21.7	20.4	19.8	18.3	14.8	12.0	...	...	...	...	...	...	C	A106
22.7	22.7	22.4	21.9	18.3	...	...	...	...	...	...	...	...	CD70	A671
22.7	22.7	22.4	21.9	18.3	...	...	...	...	...	...	...	...	D70	A672
22.7	22.7	22.4	21.9	18.3	...	...	...	...	...	...	...	...	CMSH-70	A691
23.7	...	...	...	...	...	...	...	...	...	...	...	...	X56	API 5L
23.7	...	...	...	...	...	...	...	...	...	...	...	...	Y56	A381
22.8	21.7	20.4	19.8	19.1	15.7	12.6	9.3	6.7	4.0	2.5	1.6	1.0	CK75	A671
22.8	21.7	20.4	19.8	19.1	15.7	12.6	9.3	6.7	4.0	2.5	1.6	1.0	N75	A672
22.8	21.7	20.4	19.8	19.1	15.7	12.6	9.3	6.7	4.0	2.5	1.6	1.0	CMS-75	A691
23.9	22.8	21.5	20.8	19.6	...	...	...	...	...	...	...	...	CK75	A671
23.9	22.8	21.5	20.8	19.6	...	...	...	...	...	...	...	...	N75	A672
23.9	22.8	21.5	20.8	19.6	...	...	...	...	...	...	...	...	CMS-75	A691

Copyright © 2015 by the American Society of Mechanical Engineers.
No reproduction may be made of this material without written consent of ASME.

(14) **Table A-1 Basic Allowable Stresses in Tension for Metals (Cont'd)**

Numbers in Parentheses Refer to Notes for Appendix A Tables; Specifications Are ASTM Unless Otherwise Indicated

Material	Spec. No.	Type/ Grade	UNS No.	Class/ Condition/ Temper	Size, in.	P-No. (5)	Notes	Min. Temp., °F (6)	Specified Min. Strength, ksi Tensile	Specified Min. Strength, ksi Yield	Min. Temp. to 100	200	300
Carbon Steel (Cont'd)													
Pipes and Tubes (2) (Cont'd)													
. . .	API 5L	X60	. . .	. . .	. . .	1	(51)(55)(71)(77)	A	75	60	25.0	25.0	25.0
. . .	API 5L	X65	. . .	. . .	. . .	1	(51)(55)(71)(77)	A	77	65	25.7	25.7	25.7
. . .	API 5L	X70	. . .	. . .	. . .	1	(51)(55)(71)(77)	A	82	70	27.3	27.3	27.3
. . .	API 5L	X80	. . .	. . .	. . .	1	(51)(55)(71)(77)	A	90	80	30.0	30.0	30.0
. . .	A381	Y60	. . .	. . .	. . .	1	(51)(71)	A	75	60	25.0	25.0	25.0
Pipes (Structural Grade) (2)													
A283 Gr. A	A134	. . .	. . .	. . .	. . .	1	(8a)(8c)	−20	45	24	15.0	14.7	14.2
A1011 Gr. 30	A134	. . .	. . .	. . .	. . .	1	(8a)(8c)	−20	49	30	16.3	16.3	16.3
A283 Gr. B	A134	. . .	. . .	. . .	. . .	1	(8a)(8c)	−20	50	27	16.7	16.5	15.9
A1011 Gr. 33	A134	. . .	. . .	. . .	. . .	1	(8a)(8c)	−20	52	33	17.3	17.3	17.3
A1011 Gr. 36	A134	. . .	. . .	. . .	. . .	1	(8a)(8c)	−20	53	36	17.7	17.7	17.7
A1011 Gr. 40	A134	. . .	. . .	. . .	. . .	1	(8a)(8c)	−20	55	40	18.3	18.3	18.3
A36	A134	. . .	. . .	. . .	. . .	1	(8a)(8c)	−20	58	36	19.3	19.3	19.3
A283 Gr. D	A134	. . .	. . .	. . .	. . .	1	(8a)(8c)	−20	60	33	20.0	20.0	19.5
A1011 Gr. 45	A134	. . .	. . .	. . .	. . .	1	(8a)(8c)	−20	60	45	20.0	20.0	20.0
A1011 Gr. 50	A134	. . .	. . .	. . .	. . .	1	(8a)(8c)	−20	65	50	21.7	21.7	21.7
Plates, Bars, Shapes, and Sheets													
. . .	A285	A	K01700	. . .	. . .	1	(57)(59)	B	45	24	15.0	14.7	14.2
. . .	A285	B	K02200	. . .	. . .	1	(57)(59)	B	50	27	16.7	16.5	15.9
. . .	A516	55	K01800	. . .	. . .	1	(57)	C	55	30	18.3	18.3	17.7
. . .	A285	C	K02801	. . .	. . .	1	(57)(59)	A	55	30	18.3	18.3	17.7
. . .	A516	60	K02100	. . .	. . .	1	(57)	C	60	32	20.0	19.5	18.9
. . .	A515	60	K02401	. . .	. . .	1	(57)	B	60	32	20.0	19.5	18.9
. . .	A696	B	K03200	. . .	. . .	1	(57)	A	60	35	20.0	20.0	20.0
. . .	A516	65	K02403	. . .	. . .	1	(57)	B	65	35	21.7	21.4	20.6
. . .	A515	65	K02800	. . .	. . .	1	(57)	A	65	35	21.7	21.4	20.6
. . .	A516	70	K02700	. . .	. . .	1	(57)	B	70	38	23.3	23.2	22.4
. . .	A515	70	K03101	. . .	. . .	1	(57)	A	70	38	23.3	23.2	22.4
. . .	A696	C	K03200	. . .	. . .	1	(57)	A	70	40	23.3	23.3	23.3
. . .	A537	. . .	K12437	1	≤ $2\frac{1}{2}$ thk.	1	. . .	D	70	50	23.3	23.3	22.8
. . .	A299	A	K02803	. . .	> 1 thk.	1	(57)	A	75	40	25.0	24.4	23.6
. . .	A299	A	K02803	. . .	≤ 1 thk.	1	(57)	A	75	42	25.0	25.0	24.8

Copyright © 2015 by the American Society of Mechanical Engineers.
No reproduction may be made of this material without written consent of ASME.

Table A-1 Basic Allowable Stresses in Tension for Metals (Cont'd) (14)

Numbers in Parentheses Refer to Notes for Appendix A Tables; Specifications Are ASTM Unless Otherwise Indicated

Basic Allowable Stress, *S*, ksi, at Metal Temperature, °F [Note (1)]														
400	500	600	650	700	750	800	850	900	950	1,000	1,050	1,100	Type/ Grade	Spec. No.
														Carbon Steel (Cont'd)
														Pipes and Tubes (2) (Cont'd)
25.0	...	...	...	...	...	...	...	...	...	...	...	...	X60	API 5L
25.7	...	...	...	...	...	...	...	...	...	...	...	...	X65	API 5L
27.3	...	...	...	...	...	...	...	...	...	...	...	...	X70	API 5L
30.0	...	...	...	...	...	...	...	...	...	...	...	...	X80	API 5L
25.0	...	...	...	...	...	...	...	...	...	...	...	...	Y60	A381
														Pipes (Structural Grade) (2)
13.7	...	...	...	...	...	...	...	...	...	...	...	...	...	A134
16.3	...	...	...	...	...	...	...	...	...	...	...	...	...	A134
...	...	...	...	...	...	...	...	...	...	...	...	...	...	A134
17.3	...	...	...	...	...	...	...	...	...	...	...	...	...	A134
17.7	...	...	...	...	...	...	...	...	...	...	...	...	...	A134
18.3	...	...	...	...	...	...	...	...	...	...	...	...	...	A134
19.3	...	...	...	...	...	...	...	...	...	...	...	...	...	A134
...	...	...	...	...	...	...	...	...	...	...	...	...	...	A134
20.0	...	...	...	...	...	...	...	...	...	...	...	...	...	A134
21.7	...	...	...	...	...	...	...	...	...	...	...	...	...	A134
														Plates, Bars, Shapes, and Sheets
13.7	13.0	12.3	11.9	11.5	10.7	9.2	7.9	5.9	4.0	2.5	1.6	1.0	A	A285
15.4	14.7	13.8	13.3	12.5	10.7	9.2	7.9	5.9	4.0	2.5	1.6	1.0	B	A285
17.1	16.3	15.3	14.8	14.3	13.0	10.8	8.7	...	...	...	...	...	55	A516
17.1	16.3	15.3	14.8	14.3	13.0	10.8	8.7	5.9	4.0	2.5	1.6	1.0	C	A285
18.2	17.4	16.4	15.8	15.3	13.9	11.4	8.7	...	...	...	...	...	60	A516
18.2	17.4	16.4	15.8	15.3	13.9	11.4	8.7	5.9	4.0	2.5	...	...	60	A515
19.9	19.0	17.9	17.3	15.6	...	...	...	...	...	...	...	...	B	A696
19.9	19.0	17.9	17.3	16.7	13.9	11.4	9.0	...	...	...	...	...	65	A516
19.9	19.0	17.9	17.3	16.7	13.9	11.4	9.0	6.3	4.0	2.5	...	...	65	A515
21.6	20.6	19.4	18.8	18.1	14.8	12.0	9.3	...	...	...	...	...	70	A516
21.6	20.6	19.4	18.8	18.1	14.8	12.0	9.3	6.7	4.0	2.5	...	...	70	A515
22.8	21.7	20.5	19.7	18.3	...	...	...	...	...	...	...	...	C	A696
22.7	22.7	22.4	21.9	18.3	...	...	...	...	...	...	...	...	Cl. 1	A537
22.8	21.7	20.4	19.8	19.1	15.7	12.6	9.3	6.7	4.0	2.5	1.6	1.0	A	A299
23.9	22.8	21.5	20.8	19.6	15.7	12.6	9.3	6.7	4.0	2.5	1.6	1.0	A	A299

Copyright © 2015 by the American Society of Mechanical Engineers.
No reproduction may be made of this material without written consent of ASME.

Table A-1 Basic Allowable Stresses in Tension for Metals (Cont'd)

Numbers in Parentheses Refer to Notes for Appendix A Tables; Specifications Are ASTM Unless Otherwise Indicated

Material	Spec. No.	Type/ Grade	UNS No.	Class/ Condition/ Temper	Size, in.	P-No. (5)	Notes	Min. Temp., °F (6)	Specified Min. Strength, ksi Tensile	Specified Min. Strength, ksi Yield	Min. Temp. to 100	200	300
Carbon Steel (Cont'd)													
Plates, Bars, Shapes, and Sheets (Structural)													
. . .	A283	A	K01400	. . .	. . .	1	(8c)(57)	A	45	24	15.0	14.7	14.2
. . .	A1011	30	K02502	. . .	. . .	1	(8c)(57)	A	49	30	16.3	16.3	16.3
. . .	A283	B	K01702	. . .	. . .	1	(8c)(57)	A	50	27	16.7	16.5	15.9
. . .	A1011	33	K02502	. . .	. . .	1	(8c)(57)	A	52	33	17.3	17.3	17.3
. . .	A1011	36	K02502	. . .	. . .	1	(8c)(57)	A	53	36	17.7	17.7	17.7
. . .	A283	C	K02401	. . .	. . .	1	(8c)(57)	A	55	30	18.3	18.3	17.7
. . .	A1011	40	K02502	. . .	. . .	1	(8c)(57)	A	55	40	18.3	18.3	18.3
. . .	A36	. . .	K02600	. . .	. . .	1	(8c)	A	58	36	19.3	19.3	19.3
. . .	A283	D	K02702	. . .	. . .	1	(8c)(57)	A	60	33	20.0	20.0	19.5
. . .	A1011	45	K02507	. . .	. . .	1	(8c)(57)	A	60	45	20.0	20.0	20.0
. . .	A1011	50	K02507	. . .	. . .	1	(8c)(57)	A	65	50	21.7	21.7	21.7
. . .	A992	. . .	. . .	. . .	. . .	1	(8c)(57)	A	65	50	19.9	19.9	19.9
Forgings and Fittings (2)													
. . .	A350	LF1	K03009	. . .	. . .	1	(9)(57)(59)	−20	60	30	20.0	18.3	17.7
. . .	A181	. . .	K03502	60	. . .	1	(9)(57)(59)	A	60	30	20.0	18.3	17.7
. . .	A420	WPL6	K03006	. . .	. . .	1	(57)	−50	60	35	20.0	20.0	20.0
. . .	A234	WPB	K03006	. . .	. . .	1	(57)(59)	B	60	35	20.0	20.0	20.0
. . .	A350	LF2	K03011	1	. . .	1	(9)(57)	−50	70	36	23.3	22.0	21.2
. . .	A350	LF2	K03011	2	. . .	1	(9)(57)	0	70	36	23.3	22.0	21.2
. . .	A105	. . .	K03504	. . .	. . .	1	(9)(57)(59)	−20	70	36	23.3	22.0	21.2
. . .	A181	. . .	K03502	70	. . .	1	(9)(57)(59)	A	70	36	23.3	22.0	21.2
. . .	A234	WPC	K03501	. . .	. . .	1	(57)(59)	B	70	40	23.3	23.3	23.3
Castings (2)													
. . .	A216	WCA	J02502	. . .	. . .	1	(57)	−20	60	30	20.0	18.3	17.7
. . .	A352	LCB	J03003	. . .	. . .	1	(9)(57)	−50	65	35	21.7	21.4	20.6
. . .	A352	LCC	J02505	. . .	. . .	1	(9)	−50	70	40	23.3	23.3	23.3
. . .	A216	WCB	J03002	. . .	. . .	1	(9)(57)	−20	70	36	23.3	22.0	21.2
. . .	A216	WCC	J02503	. . .	. . .	1	(9)(57)	−20	70	40	23.3	23.3	23.3

Copyright © 2015 by the American Society of Mechanical Engineers.
No reproduction may be made of this material without written consent of ASME.

Table A-1 Basic Allowable Stresses in Tension for Metals (Cont'd)

Numbers in Parentheses Refer to Notes for Appendix A Tables; Specifications Are ASTM Unless Otherwise Indicated

Basic Allowable Stress, *S*, ksi, at Metal Temperature, °F [Note (1)]														
400	500	600	650	700	750	800	850	900	950	1,000	1,050	1,100	Type/ Grade	Spec. No.
														Carbon Steel (Cont'd)
													Plates, Bars, Shapes, and Sheets (Structural)	
13.7	13.0	12.3	11.9	11.5	10.7	. . .	. . .	. . .	. . .	. . .	. . .	. . .	A	A283
16.3	16.3	15.3	14.6	12.5	10.7	. . .	. . .	. . .	. . .	. . .	. . .	. . .	30	A1011
15.4	14.7	13.8	13.3	12.5	10.7	. . .	. . .	. . .	. . .	. . .	. . .	. . .	B	A283
17.3	17.3	16.9	14.6	12.5	10.7	. . .	. . .	. . .	. . .	. . .	. . .	. . .	33	A1011
17.7	17.7	17.7	14.6	12.5	10.7	. . .	. . .	. . .	. . .	. . .	. . .	. . .	36	A1011
17.1	16.3	15.3	14.8	14.3	13.0	. . .	. . .	. . .	. . .	. . .	. . .	. . .	C	A283
18.3	18.3	18.3	18.3	15.6	13.0	. . .	. . .	. . .	. . .	. . .	. . .	. . .	40	A1011
19.3	19.3	18.4	17.8	15.6	. . .	. . .	. . .	. . .	. . .	. . .	. . .	. . .	. . .	A36
18.8	17.9	16.9	16.3	15.8	13.9	. . .	. . .	. . .	. . .	. . .	. . .	. . .	D	A283
20.0	20.0	20.0	20.0	16.9	13.9	. . .	. . .	. . .	. . .	. . .	. . .	. . .	45	A1011
21.7	21.7	21.7	20.5	16.9	13.9	. . .	. . .	. . .	. . .	. . .	. . .	. . .	50	A1011
19.9	19.9	19.9	18.9	15.5	12.8	10.5	. . .	. . .	. . .	. . .	. . .	. . .	. . .	A992
													Forgings and Fittings (2)	
17.1	16.3	15.3	14.8	14.3	13.8	11.4	8.7	5.9	4.0	2.5	. . .	. . .	LF1	A350
17.1	16.3	15.3	14.8	14.3	13.8	11.4	8.7	5.9	4.0	2.5	1.6	1.0	Cl. 60	A181
19.9	19.0	17.9	17.3	16.7	13.9	11.4	8.7	5.9	4.0	2.5	. . .	. . .	WPL6	A420
19.9	19.0	17.9	17.3	16.7	13.9	11.4	8.7	5.9	4.0	2.5	1.6	1.0	WPB	A234
20.5	19.6	18.4	17.8	17.2	14.8	12.0	9.3	6.7	4.0	2.5	. . .	. . .	LF2 Cl. 1	A350
20.5	19.6	18.4	17.8	17.2	14.8	12.0	9.3	6.7	4.0	2.5	. . .	. . .	LF2 Cl. 2	A350
20.5	19.6	18.4	17.8	17.2	14.8	12.0	9.3	6.7	4.0	2.5	1.6	1.0	. . .	A105
20.5	19.6	18.4	17.8	17.2	14.8	12.0	9.3	6.7	4.0	2.5	1.6	1.0	Cl. 70	A181
22.8	21.7	20.4	19.8	18.3	14.8	12.0	. . .	. . .	. . .	. . .	. . .	. . .	WPC	A234
													Castings (2)	
17.1	16.3	15.3	14.8	14.3	13.8	11.4	8.7	5.9	4.0	2.5	1.6	1.0	WCA	A216
19.9	19.0	17.9	17.3	16.7	13.9	11.4	9.0	6.3	4.0	2.5	1.6	1.0	LCB	A352
22.8	21.7	20.4	19.8	19.2	. . .	. . .	. . .	. . .	. . .	. . .	. . .	. . .	LCC	A352
20.5	19.6	18.4	17.8	17.2	14.8	12.0	9.3	6.7	4.0	2.5	1.6	1.0	WCB	A216
22.8	21.7	20.4	19.8	18.3	14.8	12.0	9.3	6.7	4.0	2.5	. . .	. . .	WCC	A216

Copyright © 2015 by the American Society of Mechanical Engineers.
No reproduction may be made of this material without written consent of ASME.

Table A-1 Basic Allowable Stresses in Tension for Metals (Cont'd)

Numbers in Parentheses Refer to Notes for Appendix A Tables; Specifications Are ASTM Unless Otherwise Indicated

Nominal Composition	Spec. No.	Type/ Grade	UNS No.	Class/ Condition/ Temper	Size, in.	P-No. (5)	Notes	Min. Temp., °F (6)	Specified Min. Strength, ksi Tensile	Specified Min. Strength, ksi Yield	Min. Temp. to 100	Min. Temp. 200
Low and Intermediate Alloy Steel												
Pipes (2)												
½Cr–½Mo	A335	P2	K11547	. . .	. . .	3	. . .	−20	55	30	18.3	18.3
½Cr–½Mo	A691	½CR	K12143	. . .	. . .	3	(11)(67)	−20	55	33	18.3	18.3
A387 Gr. 2 Cl. 1												
C–½Mo	A335	P1	K11522	. . .	. . .	3	(58)	−20	55	30	18.3	18.3
C–½Mo	A369	FP1	K11522	. . .	. . .	3	(58)	−20	55	30	18.3	18.3
½Cr–½Mo	A369	FP2	K11547	. . .	. . .	3	. . .	−20	55	30	18.3	18.3
1Cr–½Mo	A691	1CR	K11757	. . .	. . .	4	(11)(67)	−20	55	33	18.3	18.3
A387 Gr. 12 Cl. 1												
½Cr–½Mo	A426	CP2	J11547	. . .	. . .	3	(10)	−20	60	30	18.4	17.7
1½Si–½Mo	A335	P15	K11578	. . .	. . .	3	. . .	−20	60	30	18.8	18.2
1½Si–½Mo	A426	CP15	J11522	. . .	. . .	3	(10)	−20	60	30	18.8	18.2
1Cr–½Mo	A426	CP12	J11562	. . .	. . .	4	(10)	−20	60	30	18.8	18.3
5Cr–½Mo–1½Si	A426	CP5b	J51545	. . .	. . .	5B	(10)	−20	60	30	18.8	17.9
3Cr–Mo	A426	CP21	J31545	. . .	. . .	5A	(10)	−20	60	30	18.8	18.1
¾Cr–¾Ni–Cu–Al	A333	4	K11267	. . .	. . .	4	. . .	−150	60	35	20.0	19.1
2Cr–½Mo	A369	FP3b	K21509	. . .	. . .	4	. . .	−20	60	30	20.0	18.5
1Cr–½Mo	A335	P12	K11562	. . .	. . .	4	. . .	−20	60	32	20.0	18.7
1Cr–½Mo	A369	FP12	K11562	. . .	. . .	4	. . .	−20	60	32	20.0	18.7
1¼Cr–½Mo	A335	P11	K11597	. . .	. . .	4	. . .	−20	60	30	20.0	18.7
1¼Cr–½Mo	A369	FP11	K11597	. . .	. . .	4	. . .	−20	60	30	20.0	18.7
1¼Cr–½Mo	A691	1¼CR	K11789	. . .	. . .	4	(11)(67)	−20	60	35	20.0	20.0
A387 Gr. 11 Cl. 1												
5Cr–½Mo	A691	5CR	K41545	. . .	. . .	5B	(11)(67)	−20	60	30	20.0	18.1
A387 Gr. 5 Cl. 1												
5Cr–½Mo	A335	P5	K41545	. . .	. . .	5B	. . .	−20	60	30	20.0	18.1
5Cr–½Mo–Si	A335	P5b	K51545	. . .	. . .	5B	. . .	−20	60	30	20.0	18.1
5Cr–½Mo–Ti	A335	P5c	K41245	. . .	. . .	5B	. . .	−20	60	30	20.0	18.1
5Cr–½Mo	A369	FP5	K41545	. . .	. . .	5B	. . .	−20	60	30	20.0	18.1
9Cr–1Mo	A335	P9	K90941	. . .	. . .	5B	. . .	−20	60	30	20.0	18.1
9Cr–1Mo	A369	FP9	K90941	. . .	. . .	5B	. . .	−20	60	30	20.0	18.1
9Cr–1Mo	A691	9CR	K90941	. . .	. . .	5B	. . .	−20	60	30	20.0	18.1
A387 Gr. 9 Cl. 1												
3Cr–1Mo	A335	P21	K31545	. . .	. . .	5A	. . .	−20	60	30	20.0	18.7
3Cr–1Mo	A369	FP21	K31545	. . .	. . .	5A	. . .	−20	60	30	20.0	18.7
3Cr–1Mo	A691	3CR	K31545	. . .	. . .	5A	(11)(67)	−20	60	30	20.0	18.5
A387 Gr. 21 Cl. 1												

Copyright © 2015 by the American Society of Mechanical Engineers.
No reproduction may be made of this material without written consent of ASME.

Table A-1 Basic Allowable Stresses in Tension for Metals (Cont'd)

Numbers in Parentheses Refer to Notes for Appendix A Tables; Specifications Are ASTM Unless Otherwise Indicated

Basic Allowable Stress, *S*, ksi, at Metal Temperature, °F [Note (1)]																	
300	400	500	600	650	700	750	800	850	900	950	1,000	1,050	1,100	1,150	1,200	Type/ Grade	Spec. No.
																Low and Intermediate Alloy Steel Pipes (2)	
17.5	16.9	16.3	15.7	15.4	15.1	13.8	13.5	13.2	12.8	9.2	5.9	. . .	. . .	. . .	. . .	P2	A335
18.3	18.3	17.9	17.3	16.9	16.6	13.8	13.8	13.4	12.8	9.2	5.9	. . .	. . .	. . .	. . .	½CR	A691
17.5	16.9	16.3	15.7	15.4	15.1	13.8	13.5	13.2	12.7	8.2	4.8	4.0	2.4	. . .	. . .	P1	A335
17.5	16.9	16.3	15.7	15.4	15.1	13.8	13.5	13.2	12.7	8.2	4.8	4.0	2.4	. . .	. . .	FP1	A369
17.5	16.9	16.3	15.7	15.4	15.1	13.8	13.5	13.2	12.8	9.2	5.9	4.0	2.4	. . .	. . .	FP2	A369
18.3	18.3	17.9	17.3	16.9	16.6	16.3	15.9	15.4	14.0	11.3	7.2	4.5	2.8	1.8	1.1	1CR	A691
17.0	16.3	15.6	14.9	14.6	14.2	13.9	13.5	13.2	12.5	10.0	6.3	4.0	2.4	. . .	. . .	CP2	A426
17.6	17.0	16.5	15.9	15.6	15.3	15.0	14.4	13.8	12.5	10.0	6.3	4.0	2.4	. . .	. . .	P15	A335
17.6	17.0	16.5	15.9	15.6	15.3	15.0	14.4	13.8	12.5	10.0	6.3	4.0	2.4	. . .	. . .	CP15	A426
17.6	17.1	16.5	15.9	15.7	15.4	15.1	14.8	14.2	13.1	11.3	7.2	4.5	2.8	1.8	1.1	CP12	A426
17.1	16.2	15.4	14.5	14.1	13.7	13.3	12.8	12.4	10.9	9.0	5.5	3.5	2.5	1.8	1.2	CP5b	A426
17.4	16.8	16.1	15.5	15.2	14.8	14.5	13.9	13.2	12.0	9.0	7.0	5.5	4.0	2.7	1.5	CP21	A426
18.2	17.3	16.4	15.5	15.0	. . .	. . .	. . .	. . .	. . .	. . .	. . .	. . .	. . .	. . .	. . .	4	A333
17.5	16.4	16.3	15.7	15.4	15.1	13.9	13.5	13.1	12.5	10.0	6.2	4.2	2.6	1.4	1.0	FP3b	A369
18.0	17.5	17.2	16.7	16.2	15.6	15.2	15.0	14.5	12.8	11.3	7.2	4.5	2.8	1.8	1.1	P12	A335
18.0	17.5	17.2	16.7	16.2	15.6	15.2	15.0	14.5	12.8	11.3	7.2	4.5	2.8	1.8	1.1	FP12	A369
18.0	17.5	17.2	16.7	16.2	15.6	15.2	15.0	14.5	12.8	9.3	6.3	4.2	2.8	1.9	1.2	P11	A335
18.0	17.5	17.2	16.7	16.2	15.6	15.2	15.0	14.5	12.8	9.3	6.3	4.2	2.8	1.9	1.2	FP11	A369
20.0	19.7	18.9	18.3	18.0	17.6	17.3	16.8	16.3	15.0	9.9	6.3	4.2	2.8	1.9	1.2	1¼CR	A691
17.4	17.2	17.1	16.8	16.6	16.3	13.2	12.8	12.1	10.9	8.0	5.8	4.2	2.8	2.0	1.3	5CR	A691
17.4	17.2	17.1	16.8	16.6	16.3	13.2	12.8	12.1	10.9	8.0	5.8	4.2	2.9	1.8	1.0	P5	A335
17.4	17.2	17.1	16.8	16.6	16.3	13.2	12.8	12.1	10.9	8.0	5.8	4.2	2.9	1.8	1.0	P5b	A335
17.4	17.2	17.1	16.8	16.6	16.3	13.2	12.8	12.1	10.9	8.0	5.8	4.2	2.9	1.8	1.0	P5c	A335
17.4	17.2	17.1	16.8	16.6	16.3	13.2	12.8	12.1	10.9	8.0	5.8	4.2	2.9	1.8	1.0	FP5	A369
17.4	17.2	17.1	16.8	16.6	16.3	13.2	12.8	12.1	11.4	10.6	7.4	5.0	3.3	2.2	1.5	P9	A335
17.4	17.2	17.1	16.8	16.6	16.3	13.2	12.8	12.1	11.4	10.6	7.4	5.0	3.3	2.2	1.5	FP9	A369
17.4	17.2	17.1	16.8	16.6	16.3	13.2	12.8	12.1	11.4	10.6	7.4	5.0	3.3	2.2	1.5	9CR	A691
18.0	17.5	17.2	16.7	16.2	15.6	15.2	15.0	14.0	12.0	9.0	7.0	5.5	4.0	2.7	1.5	P21	A335
18.0	17.5	17.2	16.7	16.2	15.6	15.2	15.0	14.0	12.0	9.0	7.0	5.5	4.0	2.7	1.5	FP21	A369
18.1	17.9	17.9	17.9	17.9	17.9	17.9	17.8	14.0	12.0	9.0	7.0	5.5	4.0	2.7	1.5	3CR	A691

Copyright © 2015 by the American Society of Mechanical Engineers.
No reproduction may be made of this material without written consent of ASME.

Table A-1 Basic Allowable Stresses in Tension for Metals (Cont'd)

Numbers in Parentheses Refer to Notes for Appendix A Tables; Specifications Are ASTM Unless Otherwise Indicated

Nominal Composition	Spec. No.	Type/ Grade	UNS No.	Class/ Condition/ Temper	Size, in.	P-No. (5)	Notes	Min. Temp., °F (6)	Specified Min. Strength, ksi Tensile	Specified Min. Strength, ksi Yield	Min. Temp. to 100	Min. Temp. 200
Low and Intermediate Alloy Steel (Cont'd)												
Pipes (2) (Cont'd)												
2¼Cr–1Mo	A691	2¼CR	K21590	. . .	. . .	5A	(11)(67)(72)(75)	−20	60	30	20.0	18.5
A387 Gr. 22 Cl. 1												
2¼Cr–1Mo	A369	FP22	K21590	. . .	. . .	5A	(72)(75)	−20	60	30	20.0	18.5
2¼Cr–1Mo	A335	P22	K21590	. . .	. . .	5A	(72)(75)	−20	60	30	20.0	18.5
2Ni–1Cu	A333	9	K22035	. . .	. . .	9A	. . .	−100	63	46	21.0	. . .
2Ni–1Cu	A334	9	K22035	. . .	. . .	9A	. . .	−100	63	46	21.0	. . .
2¼Ni	A333	7	K21903	. . .	. . .	9A	. . .	−100	65	35	21.7	19.6
2¼Ni	A334	7	K21903	. . .	. . .	9A	. . .	−100	65	35	21.7	19.6
3½Ni	A333	3	K31918	. . .	. . .	9B	. . .	−150	65	35	21.7	19.6
3½Ni	A334	3	K31918	. . .	. . .	9B	. . .	−150	65	35	21.7	19.6
C–½Mo	A426	CP1	J12521	. . .	. . .	3	(10)(58)	−20	65	35	21.7	21.7
C–Mo A204 Gr. A	A672	L65	K11820	. . .	. . .	3	(11)(58)(67)	−20	65	37	21.7	21.7
C–Mo A204 Gr. A	A691	CM65	K11820	. . .	. . .	3	(11)(58)(67)	−20	65	37	21.7	21.7
2¼Ni A203 Gr. B	A671	CF70	K22103	. . .	. . .	9A	(11)(65)(67)	−20	70	40	23.3	. . .
3½Ni A203 Gr. E	A671	CF71	K32018	. . .	. . .	9B	(11)(65)(67)	−20	70	40	23.3	. . .
C–Mo A204 Gr. B	A672	L70	K12020	. . .	. . .	3	(11)(58)(67)	−20	70	40	23.3	23.3
C–Mo A204 Gr. B	A691	CM70	K12020	. . .	. . .	3	(11)(58)(67)	−20	70	40	23.3	23.3
1¼Cr–½Mo	A426	CP11	J12072	. . .	. . .	4	(10)	−20	70	40	23.3	23.3
2¼Cr–1Mo	A426	CP22	J21890	. . .	. . .	5A	(10)(72)	−20	70	40	23.3	23.3
C–Mo A204 Gr. C	A672	L75	K12320	. . .	. . .	3	(11)(58)(67)	−20	75	43	25.0	25.0
C–Mo A204 Gr. C	A691	CM75	K12320	. . .	. . .	3	(11)(58)(67)	−20	75	43	25.0	25.0
9Cr–1Mo–V	A335	P91	K90901	. . .	≤ 3 thk.	15E	. . .	−20	85	60	28.3	28.3
9Cr–1Mo–V	A691	P91	K90901	. . .	≤ 3 thk.	15E	. . .	−20	85	60	28.3	28.3
5Cr–½Mo	A426	CP5	J42045	. . .	. . .	5B	(10)	−20	90	60	30.0	28.0
9Cr–1Mo	A426	CP9	J82090	. . .	. . .	5B	(10)	−20	90	60	30.0	22.5
9Ni	A333	8	K81340	. . .	. . .	11A	(47)	−320	100	75	31.7	31.7
9Ni	A334	8	K81340	. . .	. . .	11A	. . .	−320	100	75	31.7	31.7
Plates												
½Cr–½Mo	A387	2	K12143	1	. . .	3	. . .	−20	55	33	18.3	18.3
1Cr–½Mo	A387	12	K11757	1	. . .	4	. . .	−20	55	33	18.3	18.3
9Cr–1Mo	A387	9	K90941	1	. . .	5	. . .	−20	60	30	20.0	18.1

Copyright © 2015 by the American Society of Mechanical Engineers.
No reproduction may be made of this material without written consent of ASME.

Table A-1 Basic Allowable Stresses in Tension for Metals (Cont'd)

Numbers in Parentheses Refer to Notes for Appendix A Tables; Specifications Are ASTM Unless Otherwise Indicated

Basic Allowable Stress, *S*, ksi, at Metal Temperature, °F [Note (1)]																	
300	400	500	600	650	700	750	800	850	900	950	1,000	1,050	1,100	1,150	1,200	Type/ Grade	Spec. No.
																Low and Intermediate Alloy Steel (Cont'd) Pipes (2) (Cont'd)	
18.0	17.9	17.9	17.9	17.9	17.9	17.9	17.8	14.5	12.8	10.8	7.8	5.1	3.2	2.0	1.6	$2\frac{1}{4}$CR	A691
18.0	17.9	17.9	17.9	17.9	17.9	17.9	17.8	14.5	12.8	10.8	7.8	5.1	3.2	2.0	1.6	FP22	A369
18.0	17.9	17.9	17.9	17.9	17.9	17.9	17.8	14.5	12.8	10.8	7.8	5.1	3.2	2.0	1.6	P22	A335
...	...	...	...	...	...	...	...	...	...	...	...	...	...	...	...	9	A333
...	...	...	...	...	...	...	...	...	...	...	...	...	...	...	...	9	A334
19.6	18.7	17.6	16.8	16.3	15.5	13.9	11.4	9.0	6.5	4.5	2.5	1.6	1.0	...	...	7	A333
19.6	18.7	17.6	16.8	16.3	15.5	13.9	11.4	9.0	6.5	4.5	2.5	1.6	1.0	...	...	7	A334
19.6	18.7	17.8	16.8	16.3	15.5	13.9	11.4	9.0	6.5	4.5	2.5	1.6	1.0	...	...	3	A333
19.6	18.7	17.8	16.8	16.3	15.5	13.9	11.4	9.0	6.5	4.5	2.5	1.6	1.0	...	...	3	A334
21.7	21.7	21.3	20.7	20.4	20.0	16.3	15.7	14.4	12.5	10.0	6.3	4.0	2.4	...	...	CP1	A426
21.7	20.7	20.0	19.3	19.0	18.6	16.3	15.8	15.3	13.7	8.2	4.8	4.0	2.4	...	...	L65	A672
21.7	20.7	20.0	19.3	19.0	18.6	16.3	15.8	15.3	13.7	8.2	4.8	4.0	2.4	...	...	CM65	A691
...	...	...	...	...	...	...	...	...	...	...	...	...	...	...	...	CF70	A671
...	...	...	...	...	...	...	...	...	...	...	...	...	...	...	...	CF71	A671
23.3	22.5	21.7	20.9	20.5	20.1	17.5	17.5	17.1	13.7	8.2	4.8	4.0	2.4	...	...	L70	A672
23.3	22.5	21.7	20.9	20.5	20.1	17.5	17.5	17.1	13.7	8.2	4.8	4.0	2.4	...	...	CM70	A691
23.3	23.3	22.9	22.3	21.6	20.9	15.5	15.0	14.4	13.7	9.3	6.3	4.2	2.8	1.9	1.2	CP11	A426
23.3	23.3	22.9	22.3	21.6	20.9	17.5	17.5	16.0	14.0	11.0	7.8	5.1	3.2	2.0	1.2	CP22	A426
25.0	24.1	23.3	22.5	22.1	21.7	18.8	18.8	18.3	13.7	8.2	4.8	4.0	2.4	...	...	L75	A672
25.0	24.1	23.3	22.5	22.1	21.7	18.8	18.8	18.3	13.7	8.2	4.8	4.0	2.4	...	...	CM75	A691
28.3	28.2	28.1	27.7	27.3	26.7	25.9	24.9	23.7	22.3	20.7	18.0	14.0	10.3	7.0	4.3	P91	A335
28.3	28.2	28.1	27.7	27.3	26.7	25.9	24.9	23.7	22.3	20.7	18.0	14.0	10.3	7.0	4.3	P91	A691
26.1	24.1	22.1	20.1	19.0	17.5	16.0	14.5	12.8	10.4	7.6	5.6	4.2	3.1	1.8	1.0	CP5	A426
22.5	22.5	22.5	22.5	22.5	22.0	21.0	19.4	17.3	15.0	10.7	8.5	5.5	3.3	2.2	1.5	CP9	A426
...	...	...	...	...	...	...	...	...	...	...	...	...	...	...	...	8	A333
...	...	...	...	...	...	...	...	...	...	...	...	...	...	...	...	8	A334
																	Plates
18.3	18.3	17.9	17.3	16.9	16.6	13.8	13.8	13.4	12.8	9.2	5.9	...	...	...	...	2 Cl. 1	A387
18.3	18.3	17.9	17.3	16.9	16.6	16.3	15.9	15.4	14.0	11.3	7.2	4.5	2.8	1.8	1.1	12 Cl. 1	A387
17.4	17.2	17.1	16.8	16.6	16.3	13.2	12.8	12.1	11.4	10.6	7.4	5.0	3.3	2.2	1.5	9 Cl. 1	A387

Copyright © 2015 by the American Society of Mechanical Engineers.
No reproduction may be made of this material without written consent of ASME.

(14) **Table A-1 Basic Allowable Stresses in Tension for Metals (Cont'd)**

Numbers in Parentheses Refer to Notes for Appendix A Tables; Specifications Are ASTM Unless Otherwise Indicated

Nominal Composition	Spec. No.	Type/ Grade	UNS No.	Class/ Condition/ Temper	Size, in.	P-No. (5)	Notes	Min. Temp., °F (6)	Specified Min. Strength, ksi Tensile	Specified Min. Strength, ksi Yield	Min. Temp. to 100	Min. Temp. 200
Low and Intermediate Alloy Steel (Cont'd)												
Plates (Cont'd)												
1¼Cr–½Mo	A387	11	K11789	1	. . .	4	. . .	–20	60	35	20.0	20.0
5Cr–½Mo	A387	5	K41545	1	. . .	5B	. . .	–20	60	30	20.0	18.1
3Cr–1Mo	A387	21	K31545	1	. . .	5A	. . .	–20	60	30	20.0	18.5
2¼Cr–1Mo	A387	22	K21590	1	. . .	5A	(72)	–20	60	30	20.0	18.5
2¼Ni	A203	A	K21703	. . .	. . .	9A	(12)(65)	–20	65	37	21.7	19.6
3½Ni	A203	D	K31718	. . .	. . .	9B	(12)(65)	–20	65	37	21.7	19.6
C–½Mo	A204	A	K11820	. . .	. . .	3	(58)	–20	65	37	21.7	21.7
1Cr–½Mo	A387	12	K11757	2	. . .	4	. . .	–20	65	40	21.7	21.7
2¼Ni	A203	B	K22103	. . .	. . .	9A	(12)(65)	–20	70	40	23.3	21.1
3½Ni	A203	E	K32018	. . .	. . .	9B	(12)(65)	–20	70	40	23.3	21.1
½Cr–½Mo	A387	2	K12143	2	. . .	3	. . .	–20	70	45	23.3	17.5
C–½Mo	A204	B	K12020	. . .	. . .	3	(58)	–20	70	40	23.3	23.3
Cr–Mn–Si	A202	A	K11742	. . .	. . .	4	. . .	–20	75	45	25.0	23.9
Mn–Mo	A302	A	K12021	. . .	. . .	3	. . .	–20	75	45	25.0	25.0
C–½Mo	A204	C	K12320	. . .	. . .	3	(58)	–20	75	43	25.0	25.0
1¼Cr–½Mo	A387	11	K11789	2	. . .	4	. . .	–20	75	45	25.0	25.0
5Cr–½Mo	A387	5	K41545	2	. . .	5B	. . .	–20	75	45	25.0	24.9
3Cr–½Mo	A387	21	K31545	2	. . .	5A	. . .	–20	75	45	25.0	25.0
2¼Cr–1Mo	A387	22	K21590	2	. . .	5A	(72)	–20	75	45	25.0	25.0
Mn–Mo	A302	B	K12022	. . .	. . .	3	. . .	–20	80	50	26.7	26.7
Mn–Mo–Ni	A302	C	K12039	. . .	. . .	3	. . .	–20	80	50	26.7	26.7
Mn–Mo–Ni	A302	D	K12054	. . .	. . .	3	. . .	–20	80	50	26.7	26.7
Cr–Mn–Si	A202	B	K12542	. . .	. . .	4	. . .	–20	85	47	28.4	27.1
9Cr–1Mo–V	A387	91	K90901	2	≤ 3 thk.	15E	. . .	–20	85	60	28.3	28.3
8Ni	A553	II	K71340	. . .	. . .	11A	(47)	–275	100	85	31.7	. . .
5Ni	A645	A	K41583	. . .	. . .	11A	. . .	–275	95	65	31.7	31.6
9Ni	A553	I	K81340	. . .	. . .	11A	(47)	–320	100	85	31.7	31.7
9Ni	A353	. . .	K81340	. . .	. . .	11A	(47)	–320	100	75	31.7	31.7
Forgings and Fittings (2)												
C–½Mo	A234	WP1	K12821	. . .	. . .	3	(58)	–20	55	30	18.3	18.3
1Cr–½Mo	A182	F12	K11562	1	. . .	4	(9)	–20	60	32	20.0	19.3
1Cr–½Mo	A234	WP12	K12062	1	. . .	4	. . .	–20	60	32	20.0	19.3
1¼Cr–½Mo	A182	F11	K11597	1	. . .	4	(9)	–20	60	30	20.0	18.7
1¼Cr–½Mo	A234	WP11	K11597	1	. . .	4	. . .	–20	60	30	20.0	18.7

Copyright © 2015 by the American Society of Mechanical Engineers.
No reproduction may be made of this material without written consent of ASME.

Table A-1 Basic Allowable Stresses in Tension for Metals (Cont'd) (14)

Numbers in Parentheses Refer to Notes for Appendix A Tables; Specifications Are ASTM Unless Otherwise Indicated

Basic Allowable Stress, *S*, ksi, at Metal Temperature, °F [Note (1)]																	
300	400	500	600	650	700	750	800	850	900	950	1,000	1,050	1,100	1,150	1,200	Type/ Grade	Spec. No.
																Low and Intermediate Alloy Steel (Cont'd) Plates (Cont'd)	
20.0	19.7	18.9	18.3	18.0	17.6	17.3	16.8	16.3	13.7	9.3	6.3	4.2	2.8	1.9	1.2	11 Cl. 1	A387
17.4	17.2	17.1	16.8	16.6	16.3	13.2	12.8	12.1	10.9	8.0	5.8	4.2	2.9	1.8	1.0	5 Cl. 1	A387
18.1	17.9	17.9	17.9	17.9	17.9	17.9	17.8	14.0	12.0	9.0	7.0	5.5	4.0	2.7	1.5	21 Cl. 1	A387
18.0	17.9	17.9	17.9	17.9	17.9	17.9	17.8	14.5	12.8	10.8	8.0	5.7	3.8	2.4	1.4	22 Cl. 1	A387
19.6	16.3	16.3	16.3	16.3	15.5	13.9	11.4	9.0	6.5	4.5	2.5	. . .	. . .	. . .	. . .	A	A203
19.6	16.3	16.3	16.3	16.3	15.5	13.9	11.4	9.0	6.5	4.5	2.5	. . .	. . .	. . .	. . .	D	A203
21.7	20.7	20.0	19.3	19.0	18.6	16.3	15.8	15.3	13.7	8.2	4.8	4.0	2.4	. . .	. . .	A	A204
21.7	21.7	21.7	20.9	20.5	20.1	19.7	19.2	18.7	18.0	11.3	7.2	4.5	2.8	1.8	1.1	12 Cl. 2	A387
21.1	17.5	17.5	17.5	17.5	16.6	14.8	12.0	9.3	6.5	4.5	2.5	. . .	. . .	. . .	. . .	B	A203
21.1	17.5	17.5	17.5	17.5	16.6	14.8	12.0	9.3	6.5	4.5	2.5	. . .	. . .	. . .	. . .	E	A203
17.5	17.5	17.5	17.5	17.5	17.5	17.5	17.5	16.8	14.5	10.0	6.3	. . .	. . .	. . .	. . .	2 Cl. 2	A387
23.3	22.5	21.7	20.9	20.5	20.1	17.5	17.5	17.1	13.7	8.2	4.8	4.0	2.4	. . .	. . .	B	A204
22.8	21.6	20.5	19.3	18.8	17.7	15.7	12.0	7.8	5.0	3.0	1.5	. . .	. . .	. . .	. . .	A	A202
25.0	25.0	25.0	25.0	25.0	25.0	18.3	17.7	16.8	13.7	8.2	4.8	. . .	. . .	. . .	. . .	A	A302
25.0	24.1	23.3	22.5	22.1	21.7	18.8	18.8	18.3	13.7	8.2	4.8	4.0	2.4	. . .	. . .	C	A204
25.0	25.0	24.3	23.5	23.1	22.7	22.2	21.6	21.1	13.7	9.3	6.3	4.2	2.8	1.9	1.2	11 Cl. 2	A387
24.2	24.1	23.9	23.6	23.2	22.8	16.5	16.0	15.1	10.9	8.0	5.8	4.2	2.9	1.8	1.0	5 Cl. 2	A387
24.5	24.1	23.9	23.8	23.6	23.4	23.0	22.5	19.0	13.1	9.5	6.8	4.9	3.2	2.4	1.3	21 Cl. 2	A387
24.5	24.1	23.9	23.8	23.6	23.4	23.0	22.5	21.8	17.0	11.4	7.8	5.1	3.2	2.0	1.2	22 Cl. 2	A387
26.7	26.7	26.7	26.7	26.7	26.7	19.6	18.8	17.9	13.7	8.2	4.8	. . .	. . .	. . .	. . .	B	A302
26.7	26.7	26.7	26.7	26.7	26.7	19.6	18.8	17.9	13.7	8.2	4.8	. . .	. . .	. . .	. . .	C	A302
26.7	26.7	26.7	26.7	26.7	26.7	19.6	18.8	17.9	13.7	8.2	4.8	. . .	. . .	. . .	. . .	D	A302
25.8	24.5	23.2	21.9	21.3	19.8	17.7	12.0	7.8	5.0	3.0	1.5	. . .	. . .	. . .	. . .	B	A202
28.3	28.2	28.1	27.7	27.3	26.7	25.9	24.9	23.7	22.3	20.7	18.0	14.0	10.3	7.0	4.3	91 Cl. 2	A387
. . .	. . .	. . .	. . .	. . .	. . .	. . .	. . .	. . .	. . .	. . .	. . .	. . .	. . .	. . .	. . .	II	A553
. . .	. . .	. . .	. . .	. . .	. . .	. . .	. . .	. . .	. . .	. . .	. . .	. . .	. . .	. . .	. . .	A	A645
. . .	. . .	. . .	. . .	. . .	. . .	. . .	. . .	. . .	. . .	. . .	. . .	. . .	. . .	. . .	. . .	I	A553
. . .	. . .	. . .	. . .	. . .	. . .	. . .	. . .	. . .	. . .	. . .	. . .	. . .	. . .	. . .	. . .	. . .	A353
																Forgings and Fittings (2)	
17.5	16.9	16.3	15.7	15.4	15.1	13.8	13.5	13.2	12.7	8.2	4.8	4.0	2.4	. . .	. . .	WP1	A234
18.1	17.3	16.7	16.3	16.0	15.8	15.5	15.3	14.9	14.5	11.3	7.2	4.5	2.8	1.8	1.1	F12 Cl. 1	A182
18.1	17.3	16.7	16.3	16.0	15.8	15.5	15.3	14.9	14.5	11.3	7.2	4.5	2.8	1.8	1.1	WP12 Cl. 1	A234
18.0	17.5	17.2	16.7	16.2	15.6	15.2	15.0	14.5	12.8	9.3	6.3	4.2	2.8	1.9	1.2	F11 Cl. 1	A182
18.0	17.5	17.2	16.7	16.2	15.6	15.2	15.0	14.5	12.8	9.3	6.3	4.2	2.8	1.9	1.2	WP11 Cl. 1	A234

Copyright © 2015 by the American Society of Mechanical Engineers.
No reproduction may be made of this material without written consent of ASME.

Table A-1 Basic Allowable Stresses in Tension for Metals (Cont'd)

Numbers in Parentheses Refer to Notes for Appendix A Tables; Specifications Are ASTM Unless Otherwise Indicated

Nominal Composition	Spec. No.	Type/ Grade	UNS No.	Class/ Condition/ Temper	Size, in.	P-No. (5)	Notes	Min. Temp., °F (6)	Specified Min. Strength, ksi Tensile	Specified Min. Strength, ksi Yield	Min. Temp. to 100	Min. Temp. 200
Low and Intermediate Alloy Steel (Cont'd)												
Forgings and Fittings (2) (Cont'd)												
2¼Cr–1Mo	A182	F22	K21590	1	. . .	5A	(9)(72)(75)	−20	60	30	20.0	18.5
2¼Cr–1Mo	A234	WP22	K21590	1	. . .	5A	(72)	−20	60	30	20.0	18.5
5Cr–½Mo	A234	WP5	K41545	. . .	. . .	5B	. . .	−20	60	30	20.0	18.1
9Cr–1Mo	A234	WP9	K90941	. . .	. . .	5B	. . .	−20	60	30	20.0	18.1
3½Ni	A420	WPL3	K31918	. . .	. . .	9B	. . .	−150	65	35	21.7	. . .
3½Ni	A350	LF3	K32025	. . .	. . .	9B	(9)	−150	70	37.5	23.3	. . .
½Cr–½Mo	A182	F2	K12122	. . .	. . .	3	(9)	−20	70	40	23.3	23.3
C–½Mo	A182	F1	K12822	. . .	. . .	3	(9)(58)	−20	70	40	23.3	23.3
1Cr–½Mo	A182	F12	K11564	2	. . .	4	(9)	−20	70	40	23.3	23.3
1Cr–½Mo	A234	WP12	K12062	2	. . .	4	. . .	−20	70	40	23.3	23.3
1¼Cr–½Mo	A182	F11	K11572	2	. . .	4	(9)	−20	70	40	23.3	23.3
1¼Cr–½Mo	A234	WP11	K11572	2	. . .	4	. . .	−20	70	40	23.3	23.3
5Cr–½Mo	A182	F5	K41545	. . .	. . .	5B	(9)	−20	70	40	23.3	23.3
3Cr–1Mo	A182	F21	K31545	. . .	. . .	5A	(9)	−20	75	45	25.0	25.0
2¼Cr–1Mo	A182	F22	K21590	3	. . .	5A	(9)(72)	−20	75	45	25.0	25.0
2¼Cr–1Mo	A234	WP22	K21590	3	. . .	5A	(72)	−20	75	45	25.0	25.0
9Cr–1Mo	A182	F9	K90941	. . .	. . .	5B	(9)	−20	85	55	28.3	28.3
9Cr–1Mo–V	A182	F91	K90901	. . .	≤ 3 thk.	15E	. . .	−20	85	60	28.3	28.3
9Cr–1Mo–V	A234	WP91	K90901	. . .	≤ 3 thk.	15E	. . .	−20	85	60	28.3	28.3
5Cr–½Mo	A182	F5a	K42544	. . .	. . .	5B	(9)	−20	90	65	30.0	29.9
9Ni	A420	WPL8	K81340	. . .	. . .	11A	(47)	−320	100	75	33.3	33.3
Castings (2)												
C–½Mo	A352	LC1	J12522	. . .	. . .	3	(9)(58)	−75	65	35	21.7	21.5
C–½Mo	A217	WC1	J12524	. . .	. . .	3	(9)(58)	−20	65	35	21.7	21.5
2½Ni	A352	LC2	J22500	. . .	. . .	9A	(9)	−100	70	40	23.3	17.5
3½Ni	A352	LC3	J31550	. . .	. . .	9B	(9)	−150	70	40	23.3	17.5
Ni–Cr–½Mo	A217	WC4	J12082	. . .	. . .	4	(9)	−20	70	40	23.3	23.3
Ni–Cr–1Mo	A217	WC5	J22000	. . .	. . .	4	(9)	−20	70	40	23.3	23.3
1¼Cr–½Mo	A217	WC6	J12072	. . .	. . .	4	(9)	−20	70	40	23.3	23.3
2¼Cr–1Mo	A217	WC9	J21890	. . .	. . .	5A	(9)	−20	70	40	23.3	23.3
5Cr–½Mo	A217	C5	J42045	. . .	. . .	5B	(9)	−20	90	60	30.0	29.9
9Cr–1Mo	A217	C12	J82090	. . .	. . .	5B	(9)	−20	90	60	30.0	29.9

Copyright © 2015 by the American Society of Mechanical Engineers.
No reproduction may be made of this material without written consent of ASME.

Table A-1 Basic Allowable Stresses in Tension for Metals (Cont'd)

Numbers in Parentheses Refer to Notes for Appendix A Tables; Specifications Are ASTM Unless Otherwise Indicated

Basic Allowable Stress, *S*, ksi, at Metal Temperature, °F [Note (1)]																	
300	400	500	600	650	700	750	800	850	900	950	1,000	1,050	1,100	1,150	1,200	Type/ Grade	Spec. No.
																Low and Intermediate Alloy Steel (Cont'd)	
																Forgings and Fittings (2) (Cont'd)	
18.0	17.9	17.9	17.9	17.9	17.9	17.9	17.8	14.5	12.8	10.8	7.8	5.1	3.2	2.0	1.2	F22 Cl. 1	A182
18.0	17.9	17.9	17.9	17.9	17.9	17.9	17.8	14.5	12.8	10.8	7.8	5.1	3.2	2.0	1.2	WP22 Cl. 1	A234
17.4	17.2	17.1	16.8	16.6	16.3	13.2	12.8	12.1	10.9	8.0	5.8	4.2	2.9	1.8	1.0	WP5	A234
17.4	17.2	17.1	16.8	16.6	16.3	13.2	12.8	12.1	11.4	10.6	7.4	5.0	3.3	2.2	1.5	WP9	A234
...	...	...	...	...	...	...	...	...	...	...	...	...	...	...	...	WPL3	A420
...	...	...	...	...	...	...	...	...	...	...	...	...	...	...	...	LF3	A350
23.3	22.5	21.7	20.9	20.5	20.1	17.5	17.5	17.1	15.0	9.2	5.9	...	...	...	...	F2	A182
23.3	22.5	21.7	20.9	20.5	20.1	17.5	17.5	17.1	13.7	8.2	4.8	4.0	2.4	...	...	F1	A182
23.3	22.5	21.7	20.9	20.5	20.1	19.7	19.2	18.7	18.0	11.3	7.2	4.5	2.8	1.8	1.1	F12 Cl. 2	A182
23.3	22.5	21.7	20.9	20.5	20.1	19.7	19.2	18.7	18.0	11.3	7.2	4.5	2.8	1.8	1.1	WP12 Cl. 2	A234
23.3	22.5	21.7	20.9	20.5	20.1	19.7	19.2	18.7	13.7	9.3	6.3	4.2	2.8	1.9	1.2	F11 Cl. 2	A182
23.3	22.5	21.7	20.9	20.5	20.1	19.7	19.2	18.7	13.7	9.3	6.3	4.2	2.8	1.9	1.2	WP11 Cl. 2	A234
22.6	22.4	22.4	22.0	21.7	21.3	15.4	14.8	14.1	10.9	8.0	5.8	4.2	2.9	1.8	1.0	F5	A182
24.5	24.1	23.9	23.8	23.6	23.4	23.0	22.5	19.0	13.1	9.5	6.8	4.9	3.2	2.4	1.3	F21	A182
24.5	24.1	23.9	23.8	23.6	23.4	23.0	22.5	21.8	17.0	11.4	7.8	5.1	3.2	2.0	1.2	F22 Cl. 3	A182
24.5	24.1	23.9	23.8	23.6	23.4	23.0	22.5	21.8	17.0	11.4	7.8	5.1	3.2	2.0	1.2	WP22 Cl. 3	A234
27.5	27.2	27.1	26.8	26.3	25.8	18.7	18.1	17.1	16.2	11.0	7.4	5.0	3.3	2.2	1.5	F9	A182
28.3	28.2	28.1	27.7	27.3	26.7	25.9	24.9	23.7	22.3	20.7	18.0	14.0	10.3	7.0	4.3	F91	A182
28.3	28.2	28.1	27.7	27.3	26.7	25.9	24.9	23.7	22.3	20.7	18.0	14.0	10.3	7.0	4.3	WP91	A234
29.1	28.9	28.7	28.3	27.9	27.3	19.8	19.1	14.3	10.9	8.0	5.8	4.2	2.9	1.8	1.0	F5a	A182
...	...	...	...	...	...	...	...	...	...	...	...	...	...	...	...	WPL8	A420
																	Castings (2)
20.5	19.7	18.9	18.3	18.0	17.6	...	...	...	...	...	...	...	...	...	...	LC1	A352
20.5	19.7	18.9	18.3	18.0	17.6	16.2	15.8	15.3	13.7	8.2	4.8	4.0	2.4	...	...	WC1	A217
17.5	17.5	17.5	17.5	17.5	...	...	...	...	...	...	...	...	...	...	...	LC2	A352
17.5	17.5	17.5	17.5	17.5	...	...	...	...	...	...	...	...	...	...	...	LC3	A352
23.3	22.5	21.7	20.9	20.5	20.1	17.5	17.5	17.1	15.0	9.2	5.9	...	...	...	...	WC4	A217
23.3	22.5	21.7	20.9	20.5	20.1	17.5	17.5	17.1	16.3	11.0	6.9	4.6	2.8	...	...	WC5	A217
23.3	22.5	21.7	20.9	20.5	20.1	19.7	19.2	18.7	14.5	11.0	6.9	4.6	2.8	2.5	1.3	WC6	A217
23.1	22.5	22.4	22.4	22.2	21.9	21.5	21.0	19.8	17.0	11.4	7.8	5.1	3.2	2.0	1.2	WC9	A217
29.1	28.9	28.7	28.3	27.9	27.3	19.8	19.1	14.3	10.9	8.0	5.8	4.2	2.9	1.8	1.0	C5	A217
29.1	28.9	28.7	28.3	27.9	27.3	19.8	19.1	18.2	16.5	11.0	7.4	5.0	3.3	2.2	1.5	C12	A217

Copyright © 2015 by the American Society of Mechanical Engineers.
No reproduction may be made of this material without written consent of ASME.

(14)

Table A-1 Basic Allowable Stresses in Tension for Metals (Cont'd)

Numbers in Parentheses Refer to Notes for Appendix A Tables; Specifications Are ASTM Unless Otherwise Indicated

Material	Product Form	Spec. No.	Type/ Grade	UNS No.	Class/ Condition/ Temper	Size, in.	P-No. (5)	Notes	Min. Temp., °F (6)	Specified Min. Strength, ksi Tensile	Specified Min. Strength, ksi Yield	Min. Temp. to 100	200	300	400
Stainless Steel (3)(4a)															
Pipes and Tubes (2)															
18Cr–10Ni–Ti	Smls. pipe	A312	TP321	S32100	. . .	> 3/8 thk.	8	(30)(36)	−425	70	25	16.7	*16.7*	*16.7*	**16.7**
18Cr–10Ni–Ti	Pipe	A376	TP321	S32100	. . .	> 3/8 thk.	8	(30)(36)	−425	70	25	16.7	*16.7*	*16.7*	**16.7**
18Cr–8Ni	Tube	A213	TP304L	S30403	. . .	. . .	8	(14)(36)	−425	70	25	16.7	*16.7*	*16.7*	**15.8**
18Cr–8Ni	Tube	A269	TP304L	S30403	. . .	. . .	8	(14)(36)	−425	70	25	16.7	*16.7*	*16.7*	**15.8**
18Cr–8Ni	Pipe	A312	TP304L	S30403	. . .	. . .	8	. . .	−425	70	25	16.7	*16.7*	*16.7*	**15.8**
A240 Type 304L	Pipe	A358	304L	S30403	. . .	. . .	8	(36)	−425	70	25	16.7	*16.7*	*16.7*	**15.8**
16Cr–12Ni–2Mo	Tube	A213	TP316L	S31603	. . .	. . .	8	(14)(36)	−425	70	25	16.7	*16.7*	*16.7*	**15.7**
16Cr–12Ni–2Mo	Tube	A269	TP316L	S31603	. . .	. . .	8	(14)(36)	−425	70	25	16.7	*16.7*	*16.7*	**15.7**
16Cr–12Ni–2Mo	Pipe	A312	TP316L	S31603	. . .	. . .	8	. . .	−425	70	25	16.7	*16.7*	*16.7*	**15.7**
A240 Type 316L	Pipe	A358	316L	S31603	. . .	. . .	8	(36)	−425	70	25	16.7	*16.7*	*16.7*	**15.7**
16Cr–12Ni–2Mo–Ti	Tube	A213	TP316Ti	S31635	. . .	. . .	8	(30)	−325	75	30	20.0	*20.0*	*20.0*	**19.3**
18Cr–10Ni–Ti	Smls. pipe	A312	TP321	S32100	. . .	> 3/8 thk.	8	(28)(30)(36)	−425	70	25	16.7	*16.7*	*16.7*	**16.7**
18Cr–10Ni–Ti	Pipe	A376	TP321	S32100	. . .	> 3/8 thk.	8	(28)(30)(36)	−425	70	25	16.7	*16.7*	*16.7*	**16.7**
18Cr–10Ni–Ti	Smls. pipe	A312	TP321H	S32109	. . .	> 3/8 thk.	8	(30)(36)	−325	70	25	16.7	*16.7*	*16.7*	**16.7**
18Cr–10Ni–Ti	Pipe	A376	TP321H	S32109	. . .	> 3/8 thk.	8	. . .	−325	70	25	16.7	*16.7*	*16.7*	**16.7**
23Cr–13Ni	. . .	A451	CPH8	J93400	. . .	. . .	8	(26)(28)(35)	−325	65	28	18.7	*18.7*	*18.5*	*18.0*
25Cr–20Ni	. . .	A451	CPK20	J94202	. . .	. . .	8	(12)(28)(35)(39)	−325	65	28	18.7	*18.7*	*18.5*	*18.0*
11Cr–Ti	Tube	A268	TP409	S40900	. . .	. . .	7	(35)	−20	60	30	20.0	. . .	. . .	. . .
18Cr–Ti	Tube	A268	TP430Ti	S43036	. . .	. . .	7	(35)(49)	−20	60	40	20.0	. . .	. . .	. . .
15Cr–13Ni–2Mo–Cb	. . .	A451	CPF10MC	. . .	. . .	. . .	8	(28)	−325	70	30	20.0	. . .	. . .	. . .
16Cr–8Ni–2Mo	Pipe	A376	16-8-2H	S16800	. . .	. . .	8	(26)(31)(35)	−325	75	30	20.0	. . .	. . .	. . .
12Cr–Al	Tube	A268	TP405	S40500	. . .	. . .	7	(35)	−20	60	30	20.0	20.0	19.6	19.3
13Cr	Tube	A268	TP410	S41000	. . .	. . .	6	(35)	−20	60	30	20.0	20.0	19.6	19.3
16Cr	Tube	A268	TP430	S43000	. . .	. . .	7	(35)(49)	−20	60	35	20.0	20.0	19.6	19.3
18Cr–13Ni–3Mo	Pipe	A312	TP317L	S31703	. . .	. . .	8	. . .	−325	75	30	20.0	*20.0*	*20.0*	**18.9**
25Cr–20Ni	Pipe	A312	TP310	. . .	. . .	. . .	8	(28)(35)(39)	−325	75	30	20.0	*20.0*	*20.0*	*20.0*
A240 Type 310S	. . .	A358	310S	S31008	. . .	. . .	8	(28)(31)(35)(36)	−325	75	30	20.0	*20.0*	*20.0*	*20.0*
25Cr–20Ni	Pipe	A409	TP310	S31000	. . .	. . .	8	(28)(31)(35)(36)(39)	−325	75	30	20.0	*20.0*	*20.0*	*20.0*
18Cr–10Ni–Ti	Smls. & wld. pipe	A312	TP321	S32100	. . .	≤ 3/8 thk.	8	(30)	−425	75	30	20.0	*20.0*	*20.0*	*20.0*
18Cr–10Ni–Ti	Pipe	A358	321	S32100	. . .	. . .	8	(30)(36)	−425	75	30	20.0	*20.0*	*20.0*	*20.0*
18Cr–10Ni–Ti	Pipe	A376	TP321	S32100	. . .	≤ 3/8 thk.	8	(30)(36)	−425	75	30	20.0	*20.0*	*20.0*	*20.0*
18Cr–10Ni–Ti	Pipe	A409	TP321	S32100	. . .	. . .	8	(30)(36)	−425	75	30	20.0	*20.0*	*20.0*	*20.0*
23Cr–12Ni	Pipe	A312	TP309	. . .	. . .	. . .	8	(28)(35)(39)	−325	75	30	20.0	*20.0*	*20.0*	*20.0*
A240 Type 309S	. . .	A358	309S	S30908	. . .	. . .	8	(28)(31)(35)(36)	−325	75	30	20.0	*20.0*	*20.0*	*20.0*
23Cr–12Ni	Pipe	A409	TP309	S30900	. . .	. . .	8	(28)(31)(35)(36)(39)	−325	75	30	20.0	*20.0*	*20.0*	*20.0*
18Cr–8Ni	. . .	A451	CPF8	J92600	. . .	. . .	8	(26)(28)	−425	70	30	20.0	*20.0*	*20.0*	**18.6**

Copyright © 2015 by the American Society of Mechanical Engineers.
No reproduction may be made of this material without written consent of ASME.

Table A-1 Basic Allowable Stresses in Tension for Metals (Cont'd) (14)

Numbers in Parentheses Refer to Notes for Appendix A Tables; Specifications Are ASTM Unless Otherwise Indicated

Basic Allowable Stress, *S*, ksi, at Metal Temperature, °F [Note (1)]																					
500	600	650	700	750	800	850	900	950	1,000	1,050	1,100	1,150	1,200	1,250	1,300	1,350	1,400	1,450	1,500	Type/ Grade	Spec. No.
																				Stainless Steel (3)(4a) Pipes and Tubes (2)	
16.1	15.2	14.9	14.6	14.3	14.1	13.9	13.8	13.6	13.5	9.6	6.9	5.0	3.6	2.6	1.7	1.1	0.8	0.5	0.3	TP321	A312
16.1	15.2	14.9	14.6	14.3	14.1	13.9	13.8	13.6	13.5	9.6	6.9	5.0	3.6	2.6	1.7	1.1	0.8	0.5	0.3	TP321	A376
14.7	14.0	13.7	13.5	13.3	13.0	12.8	12.6	12.3	12.0	6.3	5.1	4.0	3.2	2.6	2.1	1.7	1.1	1.0	0.9	TP304L	A213
14.7	14.0	13.7	13.5	13.3	13.0	12.8	12.6	12.3	12.0	6.3	5.1	4.0	3.2	2.6	2.1	1.7	1.1	1.0	0.9	TP304L	A269
14.7	14.0	13.7	13.5	13.3	13.0	12.8	12.6	12.3	12.0	6.3	5.1	4.0	3.2	2.6	2.1	1.7	1.1	1.0	0.9	TP304L	A312
14.7	14.0	13.7	13.5	13.3	13.0	12.8	12.6	12.3	12.0	6.3	5.1	4.0	3.2	2.6	2.1	1.7	1.1	1.0	0.9	304L	A358
14.8	14.0	13.7	13.5	13.2	12.9	12.7	12.4	12.1	11.8	11.6	11.4	8.8	6.4	4.7	3.5	2.5	1.8	1.3	1.0	TP316L	A213
14.8	14.0	13.7	13.5	13.2	12.9	12.7	12.4	12.1	11.8	11.6	11.4	8.8	6.4	4.7	3.5	2.5	1.8	1.3	1.0	TP316L	A269
14.8	14.0	13.7	13.5	13.2	12.9	12.7	12.4	12.1	11.8	11.6	11.4	8.8	6.4	4.7	3.5	2.5	1.8	1.3	1.0	TP316L	A312
14.8	14.0	13.7	13.5	13.2	12.9	12.7	12.4	12.1	11.8	11.6	11.4	8.8	6.4	4.7	3.5	2.5	1.8	1.3	1.0	316L	A358
17.8	16.8	16.5	16.2	16.1	15.9	15.8	15.7	15.5	15.3	15.1	12.3	9.8	7.4	5.5	4.1	3.1	2.3	1.7	1.3	TP316Ti	A213
16.1	15.2	14.9	14.6	14.3	14.1	13.9	13.8	13.6	13.5	12.3	9.1	6.9	5.4	4.1	3.2	2.5	1.9	1.5	1.1	TP321	A312
16.1	15.2	14.9	14.6	14.3	14.1	13.9	13.8	13.6	13.5	12.3	9.1	6.9	5.4	4.1	3.2	2.5	1.9	1.5	1.1	TP321	A376
16.1	15.2	14.9	14.6	14.3	14.1	13.9	13.8	13.6	13.5	12.3	9.1	6.9	5.4	4.1	3.2	2.5	1.9	1.5	1.1	TP321H	A312
16.1	15.2	14.9	14.6	14.3	14.1	13.9	13.8	13.6	13.5	12.3	9.1	6.9	5.4	4.1	3.2	2.5	1.9	1.5	1.1	TP321H	A376
17.7	17.1	16.7	16.3	15.9	15.4	14.9	14.4	13.9	11.1	8.5	6.5	5.0	3.8	2.9	2.3	1.8	1.3	0.9	0.8	CPH8	A451
17.7	17.1	16.7	16.3	15.9	15.4	14.9	14.4	13.9	11.3	9.8	8.5	7.3	6.0	4.8	3.5	2.4	1.6	1.1	0.8	CPK20	A451
...	...	...	...	...	...	...	...	...	...	...	...	...	...	...	...	...	...	...	...	TP409	A268
...	...	...	...	...	...	...	...	...	...	...	...	...	...	...	...	...	...	...	...	TP430Ti	A268
...	...	...	...	...	...	...	...	...	...	...	...	...	...	...	...	...	...	...	...	CPF10MC	A451
...	...	...	...	...	...	...	...	...	...	...	...	...	...	...	...	...	...	...	...	16-8-2H	A376
19.0	18.5	18.1	17.7	17.1	16.4	15.6	14.3	8.4	4.0	...	...	...	...	...	...	...	...	...	...	TP405	A268
19.0	18.5	18.1	17.7	17.1	16.4	15.6	12.3	8.8	6.4	4.4	2.9	1.8	1.0	...	...	...	...	...	...	TP410	A268
19.0	18.5	18.1	17.7	17.1	16.4	15.6	12.0	9.2	6.5	4.5	3.2	2.4	1.8	...	...	...	...	...	...	TP430	A268
17.7	16.9	16.5	16.2	15.8	15.5	15.2	...	...	...	...	...	...	...	...	...	...	...	...	...	TP317L	A312
19.3	18.5	18.2	17.9	17.7	17.4	17.2	16.9	15.9	9.9	7.1	5.0	3.6	2.5	1.5	0.8	0.5	0.4	0.3	0.2	TP310	A312
19.3	18.5	18.2	17.9	17.7	17.4	17.2	16.9	15.9	9.9	7.1	5.0	3.6	2.5	1.5	0.8	0.5	0.4	0.3	0.2	310S	A358
19.3	18.5	18.2	17.9	17.7	17.4	17.2	16.9	15.9	9.9	7.1	5.0	3.6	2.5	1.5	0.8	0.5	0.4	0.3	0.2	TP310	A409
19.3	18.3	17.9	17.5	17.2	16.9	16.7	16.5	16.4	16.2	9.6	6.9	5.0	3.6	2.6	1.7	1.1	0.8	0.5	0.3	TP321	A312
19.3	18.3	17.9	17.5	17.2	16.9	16.7	16.5	16.4	16.2	9.6	6.9	5.0	3.6	2.6	1.7	1.1	0.8	0.5	0.3	321	A358
19.3	18.3	17.9	17.5	17.2	16.9	16.7	16.5	16.4	16.2	9.6	6.9	5.0	3.6	2.6	1.7	1.1	0.8	0.5	0.3	TP321	A376
19.3	18.3	17.9	17.5	17.2	16.9	16.7	16.5	16.4	16.2	9.6	6.9	5.0	3.6	2.6	1.7	1.1	0.8	0.5	0.3	TP321	A409
19.4	18.8	18.5	18.2	18.0	17.7	17.5	17.2	16.9	13.8	10.3	7.6	5.5	4.0	3.0	2.2	1.7	1.3	1.0	0.8	TP309	A312
19.4	18.8	18.5	18.2	18.0	17.7	17.5	17.2	16.9	13.8	10.3	7.6	5.5	4.0	3.0	2.2	1.7	1.3	1.0	0.8	309S	A358
19.4	18.8	18.5	18.2	18.0	17.7	17.5	17.2	16.9	13.8	10.3	7.6	5.5	4.0	3.0	2.2	1.7	1.3	1.0	0.8	TP309	A409
17.5	16.6	16.2	15.8	15.5	15.2	14.9	14.6	14.3	12.2	9.5	7.5	6.0	4.8	3.9	3.3	2.7	2.3	2.0	1.7	CPF8	A451

Copyright © 2015 by the American Society of Mechanical Engineers.
No reproduction may be made of this material without written consent of ASME.

Table A-1 Basic Allowable Stresses in Tension for Metals (Cont'd)

Numbers in Parentheses Refer to Notes for Appendix A Tables; Specifications Are ASTM Unless Otherwise Indicated

Material	Product Form	Spec. No.	Type/ Grade	UNS No.	Class/ Condition/ Temper	Size, in.	P-No. (5)	Notes	Min. Temp., °F (6)	Specified Min. Strength, ksi Tensile	Specified Min. Strength, ksi Yield	Min. Temp. to 100	200	300	400
Stainless Steel (3)(4a) (Cont'd)															
Pipes and Tubes (2) (Cont'd)															
18Cr–10Ni–Cb	Pipe	A312	TP347	S34700	...	...	8	...	–425	75	30	20.0	*20.0*	*20.0*	*20.0*
A240 Type 347	Pipe	A358	347	S34700	...	...	8	(30)(36)	–425	75	30	20.0	*20.0*	*20.0*	*20.0*
18Cr–10Ni–Cb	Pipe	A376	TP347	S34700	...	...	8	(30)(36)	–425	75	30	20.0	*20.0*	*20.0*	*20.0*
18Cr–10Ni–Cb	Pipe	A409	TP347	S34700	...	...	8	(30)(36)	–425	75	30	20.0	*20.0*	*20.0*	*20.0*
18Cr–10Ni–Cb	Pipe	A312	TP348	S34800	...	...	8	...	–325	75	30	20.0	*20.0*	*20.0*	*20.0*
A240 Type 348	Pipe	A358	348	S34800	...	...	8	(30)(36)	–325	75	30	20.0	*20.0*	*20.0*	*20.0*
18Cr–10Ni–Cb	Pipe	A376	TP348	S34800	...	...	8	(30)(36)	–325	75	30	20.0	*20.0*	*20.0*	*20.0*
18Cr–10Ni–Cb	Pipe	A409	TP348	S34800	...	...	8	(30)(36)	–325	75	30	20.0	*20.0*	*20.0*	*20.0*
23Cr–13Ni	...	A451	CPH10	J93402	...	...	8	(12)(14)(28)(35)(39)	–325	70	30	20.0	*20.0*	*19.9*	*19.4*
23Cr–13Ni	...	A451	CPH20	J93402	...	...	8	(12)(14)(28)(35)(39)	–325	70	30	20.0	*20.0*	*19.9*	*19.4*
25Cr–20Ni	Pipe	A312	TP310	...	...	...	8	(28)(29)(35)(39)	–325	75	30	20.0	*20.0*	*20.0*	*20.0*
A240 Type 310S	Pipe	A358	310S	S31008	...	...	8	(28)(29)(31)(35)(36)	–325	75	30	20.0	*20.0*	*20.0*	*20.0*
18Cr–10Ni–Cb	...	A451	CPF8C	J92710	...	...	8	(28)	–325	70	30	20.0	*20.0*	*20.0*	*18.6*
18Cr–10Ni–Ti	Smls. & wld. pipe	A312	TP321	S32100	...	≤ 3/8 thk.	8	(28)(30)	–425	75	30	20.0	*20.0*	*20.0*	*20.0*
A240 Type 321	Pipe	A358	321	S32100	...	...	8	(28)(30)(36)	–425	75	30	20.0	*20.0*	*20.0*	*20.0*
18Cr–10Ni–Ti	Pipe	A376	TP321	S32100	...	≤ 3/8 thk.	8	(28)(30)(36)	–425	75	30	20.0	*20.0*	*20.0*	*20.0*
18Cr–10Ni–Ti	Pipe	A409	TP321	S32100	...	...	8	(28)(30)(36)	–425	75	30	20.0	*20.0*	*20.0*	*20.0*
18Cr–10Ni–Ti	Pipe	A376	TP321H	S32109	...	≤ 3/8 thk.	8	(30)(36)	–325	75	30	20.0	*20.0*	*20.0*	*20.0*
18Cr–10Ni–Ti	Smls. & wld. pipe	A312	TP321H	S32109	...	≤ 3/8 thk.	8	...	–325	75	30	20.0	*20.0*	*20.0*	*20.0*
16Cr–12Ni–2Mo	Tube	A213	TP316	S31600	...	...	8	(14)(26)(28)(31)(36)	–425	75	30	20.0	*20.0*	*20.0*	**19.3**
16Cr–12Ni–Mo	Tube	A269	TP316	S31600	...	...	8	(14)(26)(28)(31)(36)	–425	75	30	20.0	*20.0*	*20.0*	**19.3**
16Cr–12Ni–2Mo	Pipe	A312	TP316	S31600	...	...	8	(26)(28)	–425	75	30	20.0	*20.0*	*20.0*	**19.3**
A240 Type 316	Pipe	A358	316	S31600	...	...	8	(26)(28)(31)(36)	–425	75	30	20.0	*20.0*	*20.0*	**19.3**
16Cr–12Ni–2Mo	Pipe	A376	TP316	S31600	...	...	8	(26)(28)(31)(36)	–425	75	30	20.0	*20.0*	*20.0*	**19.3**
16Cr–12Ni–2Mo	Pipe	A409	TP316	S31600	...	...	8	(26)(28)(31)(36)	–425	75	30	20.0	*20.0*	*20.0*	**19.3**
18Cr–3Ni–3Mo	Pipe	A312	TP317	S31700	...	...	8	(26)(28)	–325	75	30	20.0	*20.0*	*20.0*	**19.3**
18Cr–3Ni–3Mo	Pipe	A409	TP317	S31700	...	...	8	(26)(28)(31)(36)	–325	75	30	20.0	*20.0*	*20.0*	**19.3**
16Cr–12Ni–2Mo	Pipe	A376	TP316H	S31609	...	...	8	(26)(31)(36)	–325	75	30	20.0	*20.0*	*20.0*	**19.3**
16Cr–12Ni–2Mo	Pipe	A312	TP316H	S31609	...	...	8	(26)	–325	75	30	20.0	*20.0*	*20.0*	**19.3**
18Cr–10Ni–Cb	Pipe	A376	TP347H	S34709	...	...	8	(30)(36)	–325	75	30	20.0	*20.0*	*20.0*	*20.0*
18Cr–10Ni–Cb	Pipe	A312	TP347	S34700	...	...	8	(28)	–425	75	30	20.0	*20.0*	*20.0*	*20.0*
A240 Type 347	Pipe	A358	347	S34700	...	...	8	(28)(30)(36)	–425	75	30	20.0	*20.0*	*20.0*	*20.0*
18Cr–10Ni–Cb	Pipe	A376	TP347	S34700	...	...	8	(28)(30)(36)	–425	75	30	20.0	*20.0*	*20.0*	*20.0*
18Cr–10Ni–Cb	Pipe	A409	TP347	S34700	...	...	8	(28)(30)(36)	–425	75	30	20.0	*20.0*	*20.0*	*20.0*
18Cr–10Ni–Cb	Pipe	A312	TP348	S34800	...	...	8	(28)	–325	75	30	20.0	*20.0*	*20.0*	*20.0*
A240 Type 348	Pipe	A358	348	S34800	...	...	8	(28)(30)(36)	–325	75	30	20.0	*20.0*	*20.0*	*20.0*
18Cr–10Ni–Cb	Pipe	A376	TP348	S34800	...	...	8	(28)(30)(36)	–325	75	30	20.0	*20.0*	*20.0*	*20.0*
18Cr–10Ni–Cb	Pipe	A409	TP348	S34800	...	...	8	(28)(30)(36)	–325	75	30	20.0	*20.0*	*20.0*	*20.0*
18Cr–10Ni–Cb	Pipe	A312	TP347H	S34709	...	...	8	...	–325	75	30	20.0	*20.0*	*20.0*	*20.0*
18Cr–10Ni–Cb	Pipe	A312	TP348H	S34809	...	...	8	...	–325	75	30	20.0	*20.0*	*20.0*	*20.0*

Copyright © 2015 by the American Society of Mechanical Engineers.
No reproduction may be made of this material without written consent of ASME.

Table A-1 Basic Allowable Stresses in Tension for Metals (Cont'd)

Numbers in Parentheses Refer to Notes for Appendix A Tables; Specifications Are ASTM Unless Otherwise Indicated

Basic Allowable Stress, *S*, ksi, at Metal Temperature, °F [Note (1)]																					
500	600	650	700	750	800	850	900	950	1,000	1,050	1,100	1,150	1,200	1,250	1,300	1,350	1,400	1,450	1,500	Type/ Grade	Spec. No.
																				Stainless Steel (3)(4a) (Cont'd)	
																				Pipes and Tubes (2) (Cont'd)	
20.0	19.3	19.0	18.7	18.5	18.3	*18.2*	*18.1*	*18.1*	*16.0*	*12.1*	9.1	6.1	4.4	3.3	2.2	1.5	1.2	0.9	0.8	TP347	A312
20.0	19.3	19.0	18.7	18.5	18.3	*18.2*	*18.1*	*18.1*	*16.0*	*12.1*	9.1	6.1	4.4	3.3	2.2	1.5	1.2	0.9	0.8	347	A358
20.0	19.3	19.0	18.7	18.5	18.3	*18.2*	*18.1*	*18.1*	*16.0*	*12.1*	9.1	6.1	4.4	3.3	2.2	1.5	1.2	0.9	0.8	TP347	A376
20.0	19.3	19.0	18.7	18.5	18.3	*18.2*	*18.1*	*18.1*	*16.0*	*12.1*	9.1	6.1	4.4	3.3	2.2	1.5	1.2	0.9	0.8	TP347	A409
20.0	19.3	19.0	18.7	18.5	18.3	*18.2*	*18.1*	*18.1*	*16.0*	*12.1*	9.1	6.1	4.4	3.3	2.2	1.5	1.2	0.9	0.8	TP348	A312
20.0	19.3	19.0	18.7	18.5	18.3	*18.2*	*18.1*	*18.1*	*16.0*	*12.1*	9.1	6.1	4.4	3.3	2.2	1.5	1.2	0.9	0.8	348	A358
20.0	19.3	19.0	18.7	18.5	18.3	*18.2*	*18.1*	*18.1*	*16.0*	*12.1*	9.1	6.1	4.4	3.3	2.2	1.5	1.2	0.9	0.8	TP348	A376
20.0	19.3	19.0	18.7	18.5	18.3	*18.2*	*18.1*	*18.1*	*16.0*	*12.1*	9.1	6.1	4.4	3.3	2.2	1.5	1.2	0.9	0.8	TP348	A409
18.9	18.3	17.9	17.5	17.0	16.5	*16.0*	*15.4*	*14.9*	11.1	8.5	6.5	5.0	3.8	2.9	2.3	1.8	1.3	0.9	0.8	CPH10	A451
18.9	18.3	17.9	17.5	17.0	16.5	*16.0*	*15.4*	*14.9*	11.1	8.5	6.5	5.0	3.8	2.9	2.3	1.8	1.3	0.9	0.8	CPH20	A451
19.3	18.5	18.2	17.9	17.7	17.4	*17.2*	*16.9*	*16.7*	13.8	10.3	7.6	5.5	4.0	3.0	2.2	1.7	1.3	1.0	0.8	TP310	A312
19.3	18.5	18.2	17.9	17.7	17.4	*17.2*	*16.9*	*16.7*	13.8	10.3	7.6	5.5	4.0	3.0	2.2	1.7	1.3	1.0	0.8	310S	A358
17.5	16.6	16.2	15.8	15.5	15.2	*14.9*	*14.6*	*14.3*	*14.0*	*12.1*	*9.1*	6.1	4.4	3.3	2.2	1.5	1.2	0.9	0.8	CPF8C	A451
19.3	18.3	17.9	17.5	17.2	16.9	*16.7*	*16.5*	*16.4*	*16.2*	*12.3*	9.1	6.9	5.4	4.1	3.2	2.5	1.9	1.5	1.1	TP321	A312
19.3	18.3	17.9	17.5	17.2	16.9	*16.7*	*16.5*	*16.4*	*16.2*	*12.3*	9.1	6.9	5.4	4.1	3.2	2.5	1.9	1.5	1.1	321	A358
19.3	18.3	17.9	17.5	17.2	16.9	*16.7*	*16.5*	*16.4*	*16.2*	*12.3*	9.1	6.9	5.4	4.1	3.2	2.5	1.9	1.5	1.1	TP321	A376
19.3	18.3	17.9	17.5	17.2	16.9	*16.7*	*16.5*	*16.4*	*16.2*	*12.3*	9.1	6.9	5.4	4.1	3.2	2.5	1.9	1.5	1.1	TP321	A409
19.3	18.3	17.9	17.5	17.2	16.9	*16.7*	*16.5*	*16.4*	*16.2*	*12.3*	9.1	6.9	5.4	4.1	3.2	2.5	1.9	1.5	1.1	TP321H	A376
19.3	18.3	17.9	17.5	17.2	16.9	*16.7*	*16.5*	*16.4*	*16.2*	*12.3*	9.1	6.9	5.4	4.1	3.2	2.5	1.9	1.5	1.1	TP321H	A312
18.0	17.0	16.6	16.3	16.1	15.9	15.7	15.6	15.4	15.3	*15.1*	*12.4*	9.8	7.4	5.5	4.1	3.1	2.3	1.7	1.3	TP316	A213
18.0	17.0	16.6	16.3	16.1	15.9	15.7	15.6	15.4	15.3	*15.1*	*12.4*	9.8	7.4	5.5	4.1	3.1	2.3	1.7	1.3	TP316	A269
18.0	17.0	16.6	16.3	16.1	15.9	15.7	15.6	15.4	15.3	*15.1*	*12.4*	9.8	7.4	5.5	4.1	3.1	2.3	1.7	1.3	TP316	A312
18.0	17.0	16.6	16.3	16.1	15.9	15.7	15.6	15.4	15.3	*15.1*	*12.4*	9.8	7.4	5.5	4.1	3.1	2.3	1.7	1.3	316	A358
18.0	17.0	16.6	16.3	16.1	15.9	15.7	15.6	15.4	15.3	*15.1*	*12.4*	9.8	7.4	5.5	4.1	3.1	2.3	1.7	1.3	TP316	A376
18.0	17.0	16.6	16.3	16.1	15.9	15.7	15.6	15.4	15.3	*15.1*	*12.4*	9.8	7.4	5.5	4.1	3.1	2.3	1.7	1.3	TP316	A409
18.0	17.0	16.6	16.3	16.1	15.9	15.7	15.6	15.4	15.3	*15.1*	*12.4*	9.8	7.4	5.5	4.1	3.1	2.3	1.7	1.3	TP317	A312
18.0	17.0	16.6	16.3	16.1	15.9	15.7	15.6	15.4	15.3	*15.1*	*12.4*	9.8	7.4	5.5	4.1	3.1	2.3	1.7	1.3	TP317	A409
18.0	17.0	16.6	16.3	16.1	15.9	15.7	15.6	15.4	15.3	*15.1*	*12.4*	9.8	7.4	5.5	4.1	3.1	2.3	1.7	1.3	TP316H	A376
18.0	17.0	16.6	16.3	16.1	15.9	15.7	15.6	15.4	15.3	*15.1*	*12.4*	9.8	7.4	5.5	4.1	3.1	2.3	1.7	1.3	TP316H	A312
20.0	19.3	19.0	18.7	18.5	18.3	18.2	18.1	18.1	18.1	*17.4*	*14.1*	10.5	7.9	5.9	4.4	3.2	2.5	1.8	1.3	TP347H	A376
20.0	19.3	19.0	18.7	18.5	18.3	18.2	18.1	18.1	18.1	*17.4*	*14.1*	10.5	7.9	5.9	4.4	3.2	2.5	1.8	1.3	TP347	A312
20.0	19.3	19.0	18.7	18.5	18.3	18.2	18.1	18.1	18.1	*17.4*	*14.1*	10.5	7.9	5.9	4.4	3.2	2.5	1.8	1.3	347	A358
20.0	19.3	19.0	18.7	18.5	18.3	18.2	18.1	18.1	18.1	*17.4*	*14.1*	10.5	7.9	5.9	4.4	3.2	2.5	1.8	1.3	TP347	A376
20.0	19.3	19.0	18.7	18.5	18.3	18.2	18.1	18.1	18.1	*17.4*	*14.1*	10.5	7.9	5.9	4.4	3.2	2.5	1.8	1.3	TP347	A409
20.0	19.3	19.0	18.7	18.5	18.3	18.2	18.1	18.1	18.1	*17.4*	*14.1*	10.5	7.9	5.9	4.4	3.2	2.5	1.8	1.3	TP348	A312
20.0	19.3	19.0	18.7	18.5	18.3	18.2	18.1	18.1	18.1	*17.4*	*14.1*	10.5	7.9	5.9	4.4	3.2	2.5	1.8	1.3	348	A358
20.0	19.3	19.0	18.7	18.5	18.3	18.2	18.1	18.1	18.1	*17.4*	*14.1*	10.5	7.9	5.9	4.4	3.2	2.5	1.8	1.3	TP348	A376
20.0	19.3	19.0	18.7	18.5	18.3	18.2	18.1	18.1	18.1	*17.4*	*14.1*	10.5	7.9	5.9	4.4	3.2	2.5	1.8	1.3	TP348	A409
20.0	19.3	19.0	18.7	18.5	18.3	18.2	18.1	18.1	18.1	*17.4*	*14.1*	10.5	7.9	5.9	4.4	3.2	2.5	1.8	1.3	TP347H	A312
20.0	19.3	19.0	18.7	18.5	18.3	18.2	18.1	18.1	18.1	*17.4*	*14.1*	10.5	7.9	5.9	4.4	3.2	2.5	1.8	1.3	TP348H	A312

Copyright © 2015 by the American Society of Mechanical Engineers.
No reproduction may be made of this material without written consent of ASME.

(14)

Table A-1 Basic Allowable Stresses in Tension for Metals (Cont'd)

Numbers in Parentheses Refer to Notes for Appendix A Tables; Specifications Are ASTM Unless Otherwise Indicated

Material	Product Form	Spec. No.	Type/ Grade	UNS No.	Class/ Condition/ Temper	Size, in.	P-No. (5)	Notes	Min. Temp., °F (6)	Specified Min. Strength, ksi Tensile	Specified Min. Strength, ksi Yield	Min. Temp. to 100	200	300	400
Stainless Steel (3)(4a) (Cont'd)															
Pipes and Tubes (2) (Cont'd)															
18Cr–8Ni	Tube	A213	TP304	S30400	...	...	8	(14)(26)(28)(31)(36)	−425	75	30	20.0	*20.0*	*20.0*	**18.6**
18Cr–8Ni	Tube	A269	TP304	S30400	...	...	8	(14)(26)(28)(31)(36)	−425	75	30	20.0	*20.0*	*20.0*	**18.6**
18Cr–8Ni	Pipe	A312	TP304	S30400	...	...	8	(26)(28)	−425	75	30	20.0	*20.0*	*20.0*	**18.6**
A240 Type 304	Pipe	A358	304	S30400	...	...	8	(26)(28)(31)(36)	−425	75	30	20.0	*20.0*	*20.0*	**18.6**
18Cr–8Ni	Pipe	A376	TP304	S30400	...	...	8	(20)(26)(28)(31)(36)	−425	75	30	20.0	*20.0*	*20.0*	**18.6**
18Cr–8Ni	Pipe	A376	TP304H	S30409	...	...	8	(26)(31)(36)	−325	75	30	20.0	*20.0*	*20.0*	**18.6**
18Cr–8Ni	Pipe	A409	TP304	S30400	...	...	8	(26)(28)(31)(36)	−425	75	30	20.0	*20.0*	*20.0*	**18.6**
18Cr–8Ni	Pipe	A312	TP304H	S30409	...	...	8	(26)	−325	75	30	20.0	*20.0*	*20.0*	**18.6**
18Cr–10Ni–Mo	...	A451	CPF8M	J92900	...	...	8	(26)(28)	−425	70	30	20.0	*20.0*	*18.9*	**17.0**
44Fe–25Ni–21Cr–Mo	Tube	A249	904L	N08904	...	...	45	...	−325	71	31	20.7	*20.7*	**20.4**	**18.7**
44Fe–25Ni–21Cr–Mo	Pipe	A312	904L	N08904	...	...	45	...	−325	71	31	20.7	*20.7*	**20.4**	**18.7**
20Cr–Cu	Tube	A268	TP443	S44300	...	...	10	(35)	−20	70	40	23.3	23.3	23.3	23.3
27Cr	Tube	A268	TP446	S44600	...	...	10I	(35)	−20	70	40	23.3	23.3	22.5	21.9
12Cr	Wld. pipe	A1053	50	S41003	...	...	7	...	−20	70	50	23.3	23.3	23.3	22.8
24Cr–9Ni–N	...	A451	CPE20N	...	...	...	8	(35)(39)	−325	80	40	26.7	26.7	26.7	26.7
23Cr–4Ni–N	...	A789	...	S32304	...	...	10H	(25)	−60	87	58	29.0	27.9	26.1	24.7
23Cr–4Ni–N	...	A790	...	S32304	...	...	10H	(25)	−60	87	58	29.0	27.9	26.1	24.7
20Cr–18Ni–6Mo	Pipe	A813	...	S31254	...	...	8	(8)	−325	94	44	29.3	*29.3*	*28.9*	*26.7*
20Cr–18Ni–6Mo	Pipe	A814	...	S31254	...	...	8	(8)	−325	94	44	29.3	*29.3*	*28.9*	*26.7*
12¾Cr	...	A426	CPCA-15	J91150	...	...	6	(10)(35)	−20	90	65	30.0	...	...	...
22Cr–5Ni–3Mo	...	A789	...	S31803	...	...	10H	(25)	−60	90	65	30.0	30.0	28.9	27.8
22Cr–5Ni–3Mo	...	A790	...	S31803	...	...	10H	(25)	−60	90	65	30.0	30.0	28.9	27.8
20Cr–18Ni–6Mo	Tube	A249	...	S31254	...	>3/16 thk.	8	(8)	−325	95	45	30.0	*30.0*	*29.5*	*27.3*
20Cr–18Ni–6Mo	Tube	A249	...	S31254	...	≤3/16 thk.	8	(8)	−325	98	45	30.0	*30.0*	*29.5*	*27.3*
20Cr–18Ni–6Mo	Pipe	A312	...	S31254	...	>3/16 thk.	8	(8)	−325	95	45	30.0	*30.0*	*29.5*	*27.3*
20Cr–18Ni–6Mo	Pipe	A312	...	S31254	...	≤3/16 thk.	8	(8)	−325	98	45	30.0	*30.0*	*29.5*	*27.3*
26Cr–4Ni–Mo	...	A789	...	S32900	...	...	10H	(25)	−20	90	70	30.0	...	...	...
26Cr–4Ni–Mo	...	A790	...	S32900	...	...	10H	(25)	−20	90	70	30.0	...	...	...
46Fe–24Ni–21Cr–6Mo–Cu–N	Smls. & wld. pipe	A312	...	N08367	...	>3/16	45	(26)	−325	95	45	30.0	*30.0*	*29.9*	*28.6*
46Fe–24Ni–21Cr–6Mo–Cu–N	Wld. pipe	A358	...	N08367	...	>3/16	45	(26)	−325	95	45	30.0	*30.0*	*29.9*	*28.6*
46Fe–24Ni–21Cr–6Mo–Cu–N	Wld. pipe	A813	...	N08367	...	>3/16	45	(26)	−325	95	45	30.0	*30.0*	*29.9*	*28.6*
46Fe–24Ni–21Cr–6Mo–Cu–N	Wld. pipe	A814	...	N08367	...	>3/16	45	(26)	−325	95	45	30.0	*30.0*	*29.9*	*28.6*
46Fe–24Ni–21Cr–6Mo–Cu–N	Smls. & wld. pipe	A312	...	N08367	...	≤3/16	45	(26)	−325	100	45	30.0	*30.0*	*30.0*	**29.6**
46Fe–24Ni–21Cr–6Mo–Cu–N	Wld. pipe	A358	...	N08367	...	≤3/16	45	(26)	−325	100	45	30.0	*30.0*	*30.0*	**29.6**
46Fe–24Ni–21Cr–6Mo–Cu–N	Wld. pipe	A813	...	N08367	...	≤3/16	45	(26)	−325	100	45	30.0	*30.0*	*30.0*	**29.6**
46Fe–24Ni–21Cr–6Mo–Cu–N	Wld. pipe	A814	...	N08367	...	≤3/16	45	(26)	−325	100	45	30.0	*30.0*	*30.0*	**29.6**
21Cr–5Mn–15Ni–Cu–N	Tube	A789	...	S32101	...	>3/16	10H	(25)	−20	94	65	31.3	31.3	29.8	28.5
21Cr–5Mn–15Ni–Cu–N	Pipe	A790	...	S32101	...	>3/16	10H	(25)	−20	94	65	31.3	31.3	29.8	28.5
22Cr–5.5Ni–3Mo–N	Tube	A789	2205	S32205	...	...	10H	(25)	−60	95	70	31.7	31.7	30.6	29.4
22Cr–5.5Ni–3Mo–N	Pipe	A790	2205	S32205	...	...	10H	(25)	−60	95	70	31.7	31.7	30.6	29.4
21Cr–5Mn–15Ni–Cu–N	Tube	A789	...	S32101	...	≤3/16	10H	(25)	−20	101	77	33.7	33.7	32.1	31.0
21Cr–5Mn–15Ni–Cu–N	Pipe	A790	...	S32101	...	≤3/16	10H	(25)	−20	101	77	33.7	33.7	32.1	31.0
21Cr–3Ni–Mo	...	A790	...	S32003	...	> 3/16	10H	(25)	−60	95	65	31.7	30.7	28.9	28.6
21Cr–3Ni–Mo	...	A789	...	S32003	...	≤ 3/16	10H	(25)	−60	100	70	33.3	32.3	30.4	30.1

Copyright © 2015 by the American Society of Mechanical Engineers.
No reproduction may be made of this material without written consent of ASME.

Table A-1 Basic Allowable Stresses in Tension for Metals (Cont'd) (14)

Numbers in Parentheses Refer to Notes for Appendix A Tables; Specifications Are ASTM Unless Otherwise Indicated

Basic Allowable Stress, *S*, ksi, at Metal Temperature, °F [Note (1)]																						
500	600	650	700	750	800	850	900	950	1,000	1,050	1,100	1,150	1,200	1,250	1,300	1,350	1,400	1,450	1,500	Type/ Grade	Spec. No.
																				Stainless Steel (3)(4a) (Cont'd)	
																				Pipes and Tubes (2) (Cont'd)	
17.5	**16.6**	**16.2**	**15.8**	**15.5**	**15.2**	**14.9**	*14.6*	*14.3*	*14.0*	*12.4*	9.8	7.7	6.1	4.7	3.7	2.9	2.3	1.8	1.4	TP304	A213
17.5	**16.6**	**16.2**	**15.8**	**15.5**	**15.2**	**14.9**	*14.6*	*14.3*	*14.0*	*12.4*	9.8	7.7	6.1	4.7	3.7	2.9	2.3	1.8	1.4	TP304	A269
17.5	**16.6**	**16.2**	**15.8**	**15.5**	**15.2**	**14.9**	*14.6*	*14.3*	*14.0*	*12.4*	9.8	7.7	6.1	4.7	3.7	2.9	2.3	1.8	1.4	TP304	A312
17.5	**16.6**	**16.2**	**15.8**	**15.5**	**15.2**	**14.9**	*14.6*	*14.3*	*14.0*	*12.4*	9.8	7.7	6.1	4.7	3.7	2.9	2.3	1.8	1.4	304	A358
17.5	**16.6**	**16.2**	**15.8**	**15.5**	**15.2**	**14.9**	*14.6*	*14.3*	*14.0*	*12.4*	9.8	7.7	6.1	4.7	3.7	2.9	2.3	1.8	1.4	TP304	A376
17.5	**16.6**	**16.2**	**15.8**	**15.5**	**15.2**	**14.9**	*14.6*	*14.3*	*14.0*	*12.4*	9.8	7.7	6.1	4.7	3.7	2.9	2.3	1.8	1.4	TP304H	A376
17.5	**16.6**	**16.2**	**15.8**	**15.5**	**15.2**	**14.9**	*14.6*	*14.3*	*14.0*	*12.4*	9.8	7.7	6.1	4.7	3.7	2.9	2.3	1.8	1.4	TP304	A409
17.5	**16.6**	**16.2**	**15.8**	**15.5**	**15.2**	**14.9**	*14.6*	*14.3*	*14.0*	*12.4*	9.8	7.7	6.1	4.7	3.7	2.9	2.3	1.8	1.4	TP304H	A312
15.8	**15.0**	**14.7**	**14.4**	**14.2**	**14.1**	*13.9*	*13.7*	*13.4*	*13.1*	11.5	8.9	6.9	5.4	4.3	3.4	2.8	2.3	1.9	1.6	CPF8M	A451
17.1	...	...	...	...	...	...	...	...	...	...	...	...	...	...	...	...	...	...	...	904L	A249
17.1	...	...	...	...	...	...	...	...	...	...	...	...	...	...	...	...	...	...	...	904L	A312
23.3	23.3	14.6	12.5	10.7	9.2	7.9	5.9	4.0	2.5	...	...	...	...	...	...	...	...	...	...	TP443	A268
21.5	20.9	20.6	20.2	19.7	19.1	18.4	17.5	16.4	15.1	...	...	...	...	...	...	...	...	...	...	TP446	A268
22.1	21.2	...	...	...	...	...	...	...	...	...	...	...	...	...	...	...	...	...	...	50	A1053
26.7	26.7	26.7	26.7	26.7	26.7	26.7	26.7	...	...	...	...	...	...	...	...	...	...	...	...	CPE20N	A451
22.9	19.2	...	...	...	...	...	...	...	...	...	...	...	...	...	...	...	...	...	...	...	A789
22.9	19.2	...	...	...	...	...	...	...	...	...	...	...	...	...	...	...	...	...	...	...	A790
25.2	*24.1*	*23.8*	*23.6*	*23.4*	*23.2*	*23.0*	...	...	...	...	...	...	...	...	...	...	...	...	...	...	A813
25.2	*24.1*	*23.8*	*23.6*	*23.4*	*23.2*	*23.0*	...	...	...	...	...	...	...	...	...	...	...	...	...	...	A814
...	...	...	...	...	...	...	...	...	...	...	...	...	...	...	...	...	...	...	...	CPCA-15	A426
27.2	26.9	...	...	...	...	...	...	...	...	...	...	...	...	...	...	...	...	...	...	...	A789
27.2	26.9	...	...	...	...	...	...	...	...	...	...	...	...	...	...	...	...	...	...	...	A790
25.8	*24.7*	*24.3*	*24.1*	*23.9*	*23.7*	*23.6*	...	...	...	...	...	...	...	...	...	...	...	...	...	...	A249
25.8	*24.7*	*24.3*	*24.1*	*23.9*	*23.7*	*23.6*	...	...	...	...	...	...	...	...	...	...	...	...	...	...	A249
25.8	*24.7*	*24.3*	*24.1*	*23.9*	*23.7*	*23.6*	...	...	...	...	...	...	...	...	...	...	...	...	...	...	A312
25.8	*24.7*	*24.3*	*24.1*	*23.9*	*23.7*	*23.6*	...	...	...	...	...	...	...	...	...	...	...	...	...	...	A312
...	...	...	...	...	...	...	...	...	...	...	...	...	...	...	...	...	...	...	...	...	A789
...	...	...	...	...	...	...	...	...	...	...	...	...	...	...	...	...	...	...	...	...	A790
27.7	**26.2**	**25.7**	**25.1**	**24.7**	**24.3**	...	...	...	...	...	...	...	...	...	...	...	...	...	...	...	A312
27.7	**26.2**	**25.7**	**25.1**	**24.7**	**24.3**	...	...	...	...	...	...	...	...	...	...	...	...	...	...	...	A358
27.7	**26.2**	**25.7**	**25.1**	**24.7**	**24.3**	...	...	...	...	...	...	...	...	...	...	...	...	...	...	...	A813
27.7	**26.2**	**25.7**	**25.1**	**24.7**	**24.3**	...	...	...	...	...	...	...	...	...	...	...	...	...	...	...	A814
27.7	**26.2**	**25.7**	**25.1**	**24.7**	**24.3**	...	...	...	...	...	...	...	...	...	...	...	...	...	...	...	A312
27.7	**26.2**	**25.7**	**25.1**	**24.7**	**24.3**	...	...	...	...	...	...	...	...	...	...	...	...	...	...	...	A358
27.7	**26.2**	**25.7**	**25.1**	**24.7**	**24.3**	...	...	...	...	...	...	...	...	...	...	...	...	...	...	...	A813
27.7	**26.2**	**25.7**	**25.1**	**24.7**	**24.3**	...	...	...	...	...	...	...	...	...	...	...	...	...	...	...	A814
28.5	28.5	...	...	...	...	...	...	...	...	...	...	...	...	...	...	...	...	...	...	...	A789
28.5	28.5	...	...	...	...	...	...	...	...	...	...	...	...	...	...	...	...	...	...	...	A790
28.7	28.4	...	...	...	...	...	...	...	...	...	...	...	...	...	...	...	...	...	...	2205	A789
28.7	28.4	...	...	...	...	...	...	...	...	...	...	...	...	...	...	...	...	...	...	2205	A790
30.9	30.9	...	...	...	...	...	...	...	...	...	...	...	...	...	...	...	...	...	...	...	A789
30.9	30.9	...	...	...	...	...	...	...	...	...	...	...	...	...	...	...	...	...	...	...	A790
28.6	28.6	28.6	...	...	...	...	...	...	...	...	...	...	...	...	...	...	...	...	...	...	A790
30.1	30.1	30.1	...	...	...	...	...	...	...	...	...	...	...	...	...	...	...	...	...	...	A789

Copyright © 2015 by the American Society of Mechanical Engineers.
No reproduction may be made of this material without written consent of ASME.

(14)

Table A-1 Basic Allowable Stresses in Tension for Metals (Cont'd)

Numbers in Parentheses Refer to Notes for Appendix A Tables; Specifications Are ASTM Unless Otherwise Indicated

Material	Product Form	Spec. No.	Type/ Grade	UNS No.	Class/ Condition/ Temper	Size, in.	P-No. (5)	Notes	Min. Temp., °F (6)	Specified Min. Strength, ksi Tensile	Specified Min. Strength, ksi Yield	Min. Temp. to 100	200	300	400
Stainless Steel (3)(4a) (Cont'd)															
Pipes and Tubes (2) (Cont'd)															
25Cr–8Ni–3Mo–W–Cu–N	...	A789	...	S32760	...	...	10H	(25)	−60	109	80	36.3	35.9	34.4	34.0
25Cr–8Ni–3Mo–W–Cu–N	...	A790	...	S32760	...	...	10H	(25)	−60	109	80	36.3	35.9	34.4	34.0
29Cr–6.5Ni–2Mo–N	Tube	A789	...	S32906	...	≥0.40 thk.	10H	(25)	−60	109	80	36.3	36.3	34.0	33.5
29Cr–6.5Ni–2Mo–N	Pipe	A790	...	S32906	...	≥0.40 thk.	10H	(25)	−60	109	80	36.3	36.3	34.0	33.5
24Cr–17Ni–6Mn–4½Mo–N	...	A358	...	S34565	...	...	8	(36)	−325	115	60	38.3	*38.1*	*35.8*	*34.5*
25Cr–7Ni–4Mo–N	Smls. & wld. tube	A789	...	S32750	...	...	10H	(25)	−60	116	80	38.7	38.5	36.4	35.1
25Cr–7Ni–4Mo–N	Smls. & wld. pipe	A790	2507	S32750	...	...	10H	(25)	−60	116	80	38.7	38.5	36.4	35.1
29Cr–6.5Ni–2Mo–N	Tube	A789	...	S32906	...	<0.40 thk.	10H	(25)	−60	116	94	38.7	38.6	36.8	35.6
29Cr–6.5Ni–2Mo–N	Pipe	A790	...	S32906	...	<0.40 thk.	10H	(25)	−60	116	94	38.7	38.6	36.8	35.6
Plates and Sheets															
18Cr–10Ni	...	A240	305	S30500	...	...	8	(26)(36)(39)	−325	70	25	16.7	...	...	...
12Cr–Al	...	A240	405	S40500	...	...	7	(35)	−20	60	25	16.7	15.3	14.8	14.5
18Cr–8Ni	...	A240	304L	S30403	...	...	8	(36)	−425	70	25	16.7	*16.7*	*16.7*	**15.8**
16Cr–12Ni–2Mo	...	A240	316L	S31603	...	...	8	(36)	−425	70	25	16.7	*16.7*	*16.7*	**15.7**
18Cr–Ti–Al	...	A240	X8M	...	...	...	...	(35)	−20	65	30	20.0	...	...	...
18Cr–8Ni	...	A167	302B	S30215	...	...	8	(26)(28)(31)(36)(39)	−325	75	30	20.0	*20.0*	*20.0*	**18.6**
18Cr–Ni	...	A240	302	S30200	...	...	8	(26)(36)	−325	75	30	20.0	*20.0*	*20.0*	**18.6**
12Cr	...	A1010	40	S41003	...	...	7	...	−20	66	40	22.0	22.0	22.0	21.5
12Cr	...	A1010	50	S41003	...	...	7	...	−20	70	50	23.3	23.3	23.3	22.8
13Cr	...	A240	410S	S41008	...	...	7	(35)(50)	−20	60	30	20.0	18.4	17.8	17.4
13Cr	...	A240	410	S41000	...	...	6	(35)	−20	65	30	20.0	18.4	17.8	17.4
15Cr	...	A240	429	S42900	...	...	6	(35)	−20	65	30	20.0	18.4	17.8	17.4
17Cr	...	A240	430	S43000	...	...	7	(35)	−20	65	30	20.0	18.4	17.8	17.4
18Cr–13Ni–3Mo	...	A240	317L	S31703	...	...	8	(36)	−325	75	30	20.0	*20.0*	*20.0*	**18.9**
25Cr–20Ni	...	A167	310	S31000	...	...	8	(28)(35)(36)(39)	−325	75	30	20.0	*20.0*	*20.0*	*20.0*
25Cr–20Ni	...	A240	310S	S31008	...	...	8	(28)(35)(36)	−325	75	30	20.0	*20.0*	*20.0*	*20.0*
18Cr–10Ni–Ti	...	A240	321	S32100	...	...	8	(30)(36)	−325	75	30	20.0	*20.0*	*20.0*	**20.0**
20Cr–10Ni	...	A167	308	S30800	...	...	8	(6)(26)(31)(39)	−325	75	30	20.0	20.0	20.0	18.6
23Cr–12Ni	...	A167	309	S30900	...	...	8	(12)(28)(31)(35)(36)(39)	−325	75	30	20.0	*20.0*	*20.0*	*20.0*
23Cr–12Ni	...	A240	309S	S30908	...	...	8	(28)(35)(36)	−325	75	30	20.0	*20.0*	*20.0*	*20.0*
18Cr–10Ni–Cb	...	A240	347	S34700	...	...	8	(36)	−425	75	30	20.0	*20.0*	*20.0*	*20.0*
18Cr–10Ni–Cb	...	A240	348	S34800	...	...	8	(36)	−325	75	30	20.0	*20.0*	*20.0*	*20.0*
25Cr–20Ni	...	A167	310	S31000	...	...	8	(28)(29)(35)(36)(39)	−325	75	30	20.0	*20.0*	*20.0*	*20.0*
25Cr–20Ni	...	A240	310S	S31008	...	...	8	(28)(29)(35)(36)	−325	75	30	20.0	*20.0*	*20.0*	*20.0*
18Cr–10Ni–Ti	...	A240	321	S32100	...	...	8	(28)(30)(36)	−325	75	30	20.0	*20.0*	*20.0*	**20.0**
18Cr–10Ni–Ti	...	A240	321H	S32109	...	...	8	(36)	−325	75	30	20.0	*20.0*	*20.0*	**20.0**
16Cr–12Ni–2Mo	...	A240	316	S31600	...	...	8	(26)(28)(36)	−425	75	30	20.0	*20.0*	*20.0*	**19.3**
18Cr–13Ni–3Mo	...	A240	317	S31700	...	...	8	(26)(28)(36)	−325	75	30	20.0	*20.0*	*20.0*	**19.3**

Copyright © 2015 by the American Society of Mechanical Engineers.
No reproduction may be made of this material without written consent of ASME.

Table A-1 Basic Allowable Stresses in Tension for Metals (Cont'd) (14)

Numbers in Parentheses Refer to Notes for Appendix A Tables; Specifications Are ASTM Unless Otherwise Indicated

Basic Allowable Stress, *S*, ksi, at Metal Temperature, °F [Note (1)]																					
500	600	650	700	750	800	850	900	950	1,000	1,050	1,100	1,150	1,200	1,250	1,300	1,350	1,400	1,450	1,500	Type/ Grade	Spec. No.
																				Stainless Steel (3)(4a) (Cont'd)	
																				Pipes and Tubes (2) (Cont'd)	
34.0	34.0	...	...	...	...	...	...	...	...	...	...	...	...	...	...	...	...	...	...	...	A789
34.0	34.0	...	...	...	...	...	...	...	...	...	...	...	...	...	...	...	...	...	...	...	A790
33.0	33.0	...	...	...	...	...	...	...	...	...	...	...	...	...	...	...	...	...	...	...	A789
33.0	33.0	...	...	...	...	...	...	...	...	...	...	...	...	...	...	...	...	...	...	...	A790
33.8	*33.2*	*33.1*	*32.7*	*32.4*	*32.0*	...	...	...	...	...	...	...	...	...	...	...	...	...	...	...	A358
34.5	34.3	...	...	...	...	...	...	...	...	...	...	...	...	...	...	...	...	...	...	...	A789
34.5	34.3	...	...	...	...	...	...	...	...	...	...	...	...	...	...	...	...	...	...	2507	A790
35.2	35.2	...	...	...	...	...	...	...	...	...	...	...	...	...	...	...	...	...	...	...	A789
35.2	35.2	...	...	...	...	...	...	...	...	...	...	...	...	...	...	...	...	...	...	...	A790
																				Plates and Sheets	
...	...	...	...	...	...	...	...	...	...	...	...	...	...	...	...	...	...	...	...	305	A240
14.3	14.0	13.8	13.5	13.1	12.6	12.0	11.3	8.4	4.0	...	...	...	...	...	...	...	...	...	...	405	A240
14.7	**14.0**	**13.7**	**13.5**	**13.3**	**13.0**	**12.8**	*12.6*	*12.3*	12.0	6.3	5.1	4.0	3.2	2.6	2.1	1.7	1.1	1.0	0.9	304L	A240
14.8	**14.0**	**13.7**	**13.5**	**13.2**	**12.9**	**12.7**	**12.4**	**12.1**	**11.8**	**10.8**	*10.2*	*8.8*	6.4	4.7	3.5	2.5	1.8	1.3	1.0	316L	A240
...	...	...	...	...	...	...	...	...	...	...	...	...	...	...	...	...	...	...	...	X8M	A240
17.5	**16.6**	**16.2**	**15.8**	**15.5**	**15.2**	**14.9**	**14.6**	*14.3*	...	...	...	...	...	...	...	...	...	...	...	302B	A167
17.5	**16.6**	**16.2**	**15.8**	**15.5**	**15.2**	**14.9**	**14.6**	**14.3**	*14.0*	...	...	...	...	...	...	...	...	...	...	302	A240
20.8	20.0	...	...	...	...	...	...	...	...	...	...	...	...	...	...	...	...	...	...	40	A1010
22.1	21.2	...	...	...	...	...	...	...	...	...	...	...	...	...	...	...	...	...	...	50	A1010
17.2	16.8	16.6	16.2	15.7	15.1	14.4	12.3	8.8	6.4	4.4	2.9	1.8	1.0	...	...	...	...	...	...	410S	A240
17.2	16.8	16.6	16.2	15.7	15.1	14.4	12.3	8.8	6.4	4.4	2.9	1.8	1.0	...	...	...	...	...	...	410	A240
17.2	16.8	16.6	16.2	15.7	15.1	14.4	12.0	9.2	6.5	4.5	3.2	2.4	1.8	...	...	...	...	...	...	429	A240
17.2	16.8	16.6	16.2	15.7	15.1	14.4	12.0	9.2	6.5	4.5	3.2	2.4	1.8	...	...	...	...	...	...	430	A240
17.7	**16.9**	**16.5**	**16.2**	**15.8**	**15.5**	**15.2**	...	...	...	...	...	...	...	...	...	...	...	...	...	317L	A240
19.3	**18.5**	**18.2**	**17.9**	**17.7**	**17.4**	*17.2*	*16.9*	*15.9*	9.9	7.1	5.0	3.6	2.5	1.5	0.8	0.5	0.4	0.3	0.2	310	A167
19.3	**18.5**	**18.2**	**17.9**	**17.7**	**17.4**	*17.2*	*16.9*	*15.9*	9.9	7.1	5.0	3.6	2.5	1.5	0.8	0.5	0.4	0.3	0.2	310S	A240
19.3	**18.3**	**17.9**	**17.5**	**17.2**	**16.9**	**16.7**	**16.5**	**16.4**	*16.2*	9.6	6.9	5.0	3.6	2.6	1.7	1.1	0.8	0.5	0.3	321	A240
17.5	16.6	...	...	...	...	...	...	...	...	...	...	...	...	...	...	...	...	...	...	308	A167
19.4	**18.8**	**18.5**	**18.2**	**18.0**	**17.7**	*17.5*	*17.2*	*16.9*	13.8	10.3	7.6	5.5	4.0	3.0	2.2	1.7	1.3	1.0	0.8	309	A167
19.4	**18.8**	**18.5**	**18.2**	**18.0**	**17.7**	*17.5*	*17.2*	*16.9*	13.8	10.3	7.6	5.5	4.0	3.0	2.2	1.7	1.3	1.0	0.8	309S	A240
20.0	**19.3**	**19.0**	**18.7**	**18.5**	**18.3**	*18.2*	*18.1*	*18.1*	*16.0*	*12.1*	9.1	6.1	4.4	3.3	2.2	1.5	1.2	0.9	0.8	347	A240
20.0	**19.3**	**19.0**	**18.7**	**18.5**	**18.3**	*18.2*	*18.1*	*18.1*	*16.0*	*12.1*	9.1	6.1	4.4	3.3	2.2	1.5	1.2	0.9	0.8	348	A240
19.3	**18.5**	**18.2**	**17.9**	**17.7**	**17.4**	*17.2*	*16.9*	*16.7*	13.8	10.3	7.6	5.5	4.0	3.0	2.2	1.7	1.3	1.0	0.8	310	A167
19.3	**18.5**	**18.2**	**17.9**	**17.7**	**17.4**	*17.2*	*16.9*	*16.7*	13.8	10.3	7.6	5.5	4.0	3.0	2.2	1.7	1.3	1.0	0.8	310S	A240
19.3	**18.3**	**17.9**	**17.5**	**17.2**	**16.9**	**16.7**	**16.5**	**16.4**	*16.2*	*12.3*	9.1	6.9	5.4	4.1	3.2	2.5	1.9	1.5	1.1	321	A240
19.3	**18.3**	**17.9**	**17.5**	**17.2**	**16.9**	**16.7**	**16.5**	**16.4**	*16.2*	*12.3*	9.1	6.9	5.4	4.1	3.2	2.5	1.9	1.5	1.1	321H	A240
18.0	**17.0**	**16.6**	**16.3**	**16.1**	**15.9**	**15.7**	**15.6**	**15.4**	**15.3**	*15.1*	*12.4*	9.8	7.4	5.5	4.1	3.1	2.3	1.7	1.3	316	A240
18.0	**17.0**	**16.6**	**16.3**	**16.1**	**15.9**	**15.7**	**15.6**	**15.4**	**15.3**	*15.1*	*12.4*	9.8	7.4	5.5	4.1	3.1	2.3	1.7	1.3	317	A240

Copyright © 2015 by the American Society of Mechanical Engineers.
No reproduction may be made of this material without written consent of ASME.

(14)

Table A-1 Basic Allowable Stresses in Tension for Metals (Cont'd)

Numbers in Parentheses Refer to Notes for Appendix A Tables; Specifications Are ASTM Unless Otherwise Indicated

Material	Product Form	Spec. No.	Type/ Grade	UNS No.	Class/ Condition/ Temper	Size, in.	P-No. (5)	Notes	Min. Temp., °F (6)	Specified Min. Strength, ksi Tensile	Specified Min. Strength, ksi Yield	Min. Temp. to 100	200	300	400
Stainless Steel (3)(4a) (Cont'd)															
Plates and Sheets (Cont'd)															
18Cr–10Ni–Cb	...	A167	347	...	...	...	8	(28)(30)(36)	−425	75	30	20.0	*20.0*	*20.0*	*20.0*
18Cr–10Ni–Cb	...	A240	347	S34700	...	...	8	(28)(36)	−425	75	30	20.0	*20.0*	*20.0*	*20.0*
18Cr–10Ni–Cb	...	A167	348	...	...	...	8	(28)(30)(36)	−325	75	30	20.0	*20.0*	*20.0*	*20.0*
18Cr–10Ni–Cb	...	A240	348	S34800	...	...	8	(28)(36)	−325	75	30	20.0	*20.0*	*20.0*	*20.0*
18Cr–8Ni	...	A240	304	S30400	...	...	8	(26)(28)(36)	−425	75	30	20.0	*20.0*	*20.0*	**18.6**
44Fe–25Ni–21Cr–Mo	...	A240	904L	N08904	...	...	45	...	−325	71	31	20.7	*20.7*	**20.4**	**18.7**
16Cr–4Ni–6Mn–N	...	A240	201LN	S20153	...	...	8	...	−325	95	45	30.0	*27.6*	*24.7*	*23.4*
20Cr–18Ni–6Mo	...	A240	...	S31254	...	>3/16 thk.	8	...	−325	95	45	30.0	*30.0*	*29.5*	*27.3*
20Cr–18Ni–6Mo	...	A240	...	S31254	...	≤3/16 thk.	8	...	−325	98	45	30.0	*30.0*	*29.5*	*27.3*
46Fe–24Ni–21Cr–6Mo–Cu–N	Plate	A240	...	N08367	...	>3/16	45	(26)	−325	95	45	30.0	*30.0*	*29.9*	*28.6*
46Fe–24Ni–21Cr–6Mo–Cu–N	Sheet & strip	A240	...	N08367	...	≤3/16	45	(26)	−325	100	45	30.0	*30.0*	*30.0*	**29.6**
21Cr–5Mo–15Ni–Cu–N	...	A240	...	S32101	...	>3/16 thk.	10H	(25)	−20	94	65	31.3	31.3	29.8	28.5
21Cr–5Mo–15Ni–Cu–N	...	A240	...	S32101	...	≤3/16 thk.	10H	(25)	−20	101	77	33.7	33.7	32.1	31.0
22Cr–5.5Ni–3Mo–N	...	A240	2205	S32205	...	...	10H	(25)	−60	95	65	31.7	31.7	30.6	29.4
21Cr–3Ni–Mo	...	A240	...	S32003	...	> 3/16	10H	(25)	−60	95	65	31.7	30.7	28.9	28.6
21Cr–3Ni–Mo	...	A240	...	S32003	...	≤ 3/16	10H	(25)	−60	100	70	33.3	32.3	30.4	30.1
29Cr–6.5Ni–2Mo–N	...	A240	...	S32906	...	≥0.40 thk.	10H	(25)	−60	109	80	36.3	36.3	34.5	33.5
29Cr–6.5Ni–2Mo–N	...	A240	...	S32906	...	<0.40 thk.	10H	(25)	−60	116	94	38.7	38.6	36.8	35.6
25Cr–8Ni–3Mo–W–Cu–N	...	A240	...	S32760	...	...	10H	(25)	−60	109	80	36.3	36.3	34.8	34.0
25Cr–7Ni–4Mo–N	...	A240	2507	S32750	...	...	10H	(25)	−60	116	80	38.7	38.5	36.4	35.1
Forgings and Fittings (2)															
18Cr–13Ni–3Mo	...	A182	F317L	S31703	...	≤ 5 thk.	8	(9)(21a)	−325	70	25	16.7	*16.7*	**16.7**	**15.7**
18Cr–8Ni	...	A182	F304L	S30403	...	...	8	(9)(21a)	−425	70	25	16.7	*16.7*	*16.7*	*15.8*
18Cr–8Ni	...	A403	WP304L	S30403	...	...	8	(32)(37)	−425	70	25	16.7	*16.7*	*16.7*	*15.8*
16Cr–12Ni–2Mo	...	A182	F316L	S31603	...	...	8	(9)(21a)	−425	70	25	16.7	*16.7*	*16.7*	**15.7**
16Cr–12Ni–2Mo	...	A403	WP316L	S31603	...	...	8	(32)(37)	−425	70	25	16.7	*16.7*	*16.7*	**15.7**
20Ni–8Cr	...	A182	F10	S33100	...	...	8	(26)(28)(39)	−325	80	30	20.0	...	...	...
18Cr–13Ni–3Mo	...	A403	WP317L	S31703	...	...	8	(32)(37)	−325	75	30	20.0	*20.0*	*20.0*	**18.9**
25Cr–20Ni	...	A182	F310	S31000	...	...	8	(9)(21)(28)(35)(39)	−325	75	30	20.0	*20.0*	*20.0*	*20.0*
25Cr–20Ni	...	A403	WP310	S31008	...	...	8	(28)(32)(35)(37)(39)	−325	75	30	20.0	*20.0*	*20.0*	*20.0*
18Cr–10Ni–Ti	...	A182	F321	S32100	...	...	8	(9)(21)	−325	75	30	20.0	*20.0*	*20.0*	**20.0**
18Cr–10Ni–Ti	...	A403	WP321	S32100	...	...	8	(32)(37)	−325	75	30	20.0	*20.0*	*20.0*	**20.0**
23Cr–12Ni	...	A403	WP309	S30900	...	...	8	(28)(32)(35)(37)(39)	−325	75	30	20.0	*20.0*	*20.0*	*20.0*
25Cr–20Ni	...	A182	F310	S31000	...	...	8	(9)(21)(28)(29)(35)(39)	−325	75	30	20.0	*20.0*	*20.0*	*20.0*
25Cr–20Ni	...	A403	WP310	S31008	...	...	8	(28)(29)(32)(35)(37)(39)	−325	75	30	20.0	*20.0*	*20.0*	*20.0*
18Cr–10Ni–Cb	...	A182	F347	S34700	...	...	8	(9)(21)	−425	75	30	20.0	*20.0*	*20.0*	*20.0*
18Cr–10Ni–Cb	...	A403	WP347	S34700	...	...	8	(32)(37)	−425	75	30	20.0	*20.0*	*20.0*	*20.0*
18Cr–10Ni–Cb	...	A182	F348	S34800	...	...	8	(9)(21)	−325	75	30	20.0	*20.0*	*20.0*	*20.0*
18Cr–10Ni–Cb	...	A403	WP348	S34800	...	...	8	(32)(37)	−325	75	30	20.0	*20.0*	*20.0*	*20.0*

Copyright © 2015 by the American Society of Mechanical Engineers.
No reproduction may be made of this material without written consent of ASME.

Table A-1 Basic Allowable Stresses in Tension for Metals (Cont'd) (14)

Numbers in Parentheses Refer to Notes for Appendix A Tables; Specifications Are ASTM Unless Otherwise Indicated

Basic Allowable Stress, *S*, ksi, at Metal Temperature, °F [Note (1)]																					
500	600	650	700	750	800	850	900	950	1,000	1,050	1,100	1,150	1,200	1,250	1,300	1,350	1,400	1,450	1,500	Type/ Grade	Spec. No.
																				Stainless Steel (3)(4a) (Cont'd)	
																				Plates and Sheets (Cont'd)	
20.0	**19.3**	**19.0**	**18.7**	**18.5**	**18.3**	**18.2**	**18.1**	**18.1**	**18.1**	**17.4**	14.1	10.5	7.9	5.9	4.4	3.2	2.5	1.8	1.3	347	A167
20.0	**19.3**	**19.0**	**18.7**	**18.5**	**18.3**	**18.2**	**18.1**	**18.1**	**18.1**	**17.4**	14.1	10.5	7.9	5.9	4.4	3.2	2.5	1.8	1.3	347	A240
20.0	**19.3**	**19.0**	**18.7**	**18.5**	**18.3**	**18.2**	**18.1**	**18.1**	**18.1**	**17.4**	14.1	10.5	7.9	5.9	4.4	3.2	2.5	1.8	1.3	348	A167
20.0	**19.3**	**19.0**	**18.7**	**18.5**	**18.3**	**18.2**	**18.1**	**18.1**	**18.1**	**17.4**	14.1	10.5	7.9	5.9	4.4	3.2	2.5	1.8	1.3	348	A240
17.5	**16.6**	**16.2**	**15.8**	**15.5**	**15.2**	**14.9**	**14.6**	**14.3**	*14.0*	*12.4*	9.8	7.7	6.1	4.7	3.7	2.9	2.3	1.8	1.4	304	A240
17.1	...	...	...	...	...	...	...	...	...	...	...	...	...	...	...	...	...	...	...	904L	A240
23.0	*22.9*	*22.8*	*22.6*	*22.3*	*21.8*	*21.5*	...	...	...	...	...	...	...	...	...	...	...	...	...	201LN	A240
25.8	*24.7*	*24.3*	*24.1*	*23.9*	*23.7*	*23.6*	...	...	...	...	...	...	...	...	...	...	...	...	...	...	A240
25.8	*24.7*	*24.3*	*24.1*	*23.9*	*23.7*	*23.6*	...	...	...	...	...	...	...	...	...	...	...	...	...	...	A240
27.7	**26.2**	**25.7**	**25.1**	**24.7**	**24.3**	...	...	...	...	...	...	...	...	...	...	...	...	...	...	...	A240
27.7	**26.2**	**25.7**	**25.1**	**24.7**	**24.3**	...	...	...	...	...	...	...	...	...	...	...	...	...	...	...	A240
28.5	28.5	...	...	...	...	...	...	...	...	...	...	...	...	...	...	...	...	...	...	...	A240
30.9	30.9	...	...	...	...	...	...	...	...	...	...	...	...	...	...	...	...	...	...	...	A240
28.7	28.4	...	...	...	...	...	...	...	...	...	...	...	...	...	...	...	...	...	...	2205	A240
28.6	28.6	28.6	...	...	...	...	...	...	...	...	...	...	...	...	...	...	...	...	...	...	A240
30.1	30.1	30.1	...	...	...	...	...	...	...	...	...	...	...	...	...	...	...	...	...	...	A240
33.0	33.0	...	...	...	...	...	...	...	...	...	...	...	...	...	...	...	...	...	...	...	A240
35.2	35.2	...	...	...	...	...	...	...	...	...	...	...	...	...	...	...	...	...	...	...	A240
33.9	33.9	...	...	...	...	...	...	...	...	...	...	...	...	...	...	...	...	...	...	...	A240
34.5	34.3	...	...	...	...	...	...	...	...	...	...	...	...	...	...	...	...	...	...	2507	A240
																				Forgings and Fittings (2)	
14.8	**14.0**	**13.7**	**13.5**	**13.2**	**12.9**	**12.7**	...	...	...	...	...	...	...	...	...	...	...	...	...	F317L	A182
14.7	*14.0*	**13.7**	**13.5**	**13.3**	**13.0**	**12.8**	*12.6*	*12.3*	12.0	6.3	5.1	4.0	3.2	2.6	2.1	1.7	1.1	1.0	0.9	F304L	A182
14.7	*14.0*	**13.7**	**13.5**	**13.3**	**13.0**	**12.8**	*12.6*	*12.3*	12.0	6.3	5.1	4.0	3.2	2.6	2.1	1.7	1.1	1.0	0.9	WP304L	A403
14.8	**14.0**	**13.7**	**13.5**	**13.2**	**12.9**	**12.7**	**12.4**	**12.1**	**11.8**	**10.8**	*10.2*	*8.8*	6.4	4.7	3.5	2.5	1.8	1.3	1.0	F316L	A182
14.8	**14.0**	**13.7**	**13.5**	**13.2**	**12.9**	**12.7**	**12.4**	**12.1**	**11.8**	**10.8**	*10.2*	*8.8*	6.4	4.7	3.5	2.5	1.8	1.3	1.0	WP316L	A403
...	...	...	...	...	...	...	...	...	...	...	...	...	...	...	...	...	...	...	...	F10	A182
17.7	**16.9**	**16.5**	**16.2**	**15.8**	**15.5**	**15.2**	...	...	...	...	...	...	...	...	...	...	...	...	...	WP317L	A403
19.3	**18.5**	**18.2**	**17.9**	**17.7**	**17.4**	*17.2*	*16.9*	*15.9*	*9.9*	7.1	5.0	3.6	2.5	1.5	0.8	0.5	0.4	0.3	0.2	F310	A182
19.3	**18.5**	**18.2**	**17.9**	**17.7**	**17.4**	*17.2*	*16.9*	*15.9*	*9.9*	7.1	5.0	3.6	2.5	1.5	0.8	0.5	0.4	0.3	0.2	WP310	A403
19.3	**18.3**	**17.9**	**17.5**	**17.2**	**16.9**	**16.7**	**16.5**	**16.4**	*16.2*	9.6	6.9	5.0	3.6	2.6	1.7	1.1	0.8	0.5	0.3	F321	A182
19.3	**18.3**	**17.9**	**17.5**	**17.2**	**16.9**	**16.7**	**16.5**	**16.4**	*16.2*	9.6	6.9	5.0	3.6	2.6	1.7	1.1	0.8	0.5	0.3	WP321	A403
19.4	**18.8**	**18.5**	**18.2**	**18.0**	**17.7**	*17.5*	*17.2*	*16.9*	13.8	10.3	7.6	5.5	4.0	3.0	2.2	1.7	1.3	1.0	0.8	WP309	A403
19.3	**18.5**	**18.2**	**17.9**	**17.7**	**17.4**	*17.2*	*16.9*	*16.7*	13.8	10.3	7.6	5.5	4.0	3.0	2.2	1.7	1.3	1.0	0.8	F310	A182
19.3	**18.5**	**18.2**	**17.9**	**17.7**	**17.4**	*17.2*	*16.9*	*16.7*	13.8	10.3	7.6	5.5	4.0	3.0	2.2	1.7	1.3	1.0	0.8	WP310	A403
20.0	**19.3**	**19.0**	**18.7**	**18.5**	**18.3**	*18.2*	*18.1*	*18.1*	*16.0*	*12.1*	9.1	6.1	4.4	3.3	2.2	1.5	1.2	0.9	0.8	F347	A182
20.0	**19.3**	**19.0**	**18.7**	**18.5**	**18.3**	*18.2*	*18.1*	*18.1*	*16.0*	*12.1*	9.1	6.1	4.4	3.3	2.2	1.5	1.2	0.9	0.8	WP347	A403
20.0	**19.3**	**19.0**	**18.7**	**18.5**	**18.3**	*18.2*	*18.1*	*18.1*	*16.0*	*12.1*	9.1	6.1	4.4	3.3	2.2	1.5	1.2	0.9	0.8	F348	A182
20.0	**19.3**	**19.0**	**18.7**	**18.5**	**18.3**	*18.2*	*18.1*	*18.1*	*16.0*	*12.1*	9.1	6.1	4.4	3.3	2.2	1.5	1.2	0.9	0.8	WP348	A403

Copyright © 2015 by the American Society of Mechanical Engineers.
No reproduction may be made of this material without written consent of ASME.

(14)

Table A-1 Basic Allowable Stresses in Tension for Metals (Cont'd)

Numbers in Parentheses Refer to Notes for Appendix A Tables; Specifications Are ASTM Unless Otherwise Indicated

Material	Product Form	Spec. No.	Type/ Grade	UNS No.	Class/ Condition/ Temper	Size, in.	P-No. (5)	Notes	Min. Temp., °F (6)	Specified Min. Strength, ksi Tensile	Specified Min. Strength, ksi Yield	Min. Temp. to 100	200	300	400
Stainless Steel (3)(4a) (Cont'd)															
Forgings and Fittings (2) (Cont'd)															
18Cr–10Ni–Ti	...	A182	F321	S32100	...	...	8	(9)(21)(28)(30)	−325	75	30	20.0	*20.0*	*20.0*	**20.0**
18Cr–10Ni–Ti	...	A182	F321H	S32109	...	...	8	(9)(21)	−325	75	30	20.0	*20.0*	*20.0*	**20.0**
18Cr–10Ni–Ti	...	A403	WP321	S32100	...	...	8	(28)(30)(32)(37)	−325	75	30	20.0	*20.0*	*20.0*	**20.0**
18Cr–10Ni–Ti	...	A403	WP321H	S32109	...	...	8	(32)(37)	−325	75	30	20.0	*20.0*	*20.0*	**20.0**
16Cr–12Ni–2Mo	...	A403	WP316H	S31609	...	...	8	(26)(32)(37)	−325	75	30	20.0	*20.0*	*20.0*	**19.3**
16Cr–12Ni–2Mo	...	A182	F316H	S31609	...	...	8	(9)(21)(26)	−325	75	30	20.0	*20.0*	*20.0*	**19.3**
18Cr–10Ni–Cb	...	A403	WP347H	S34709	...	...	8	(32)(37)	−325	75	30	20.0	*20.0*	*20.0*	*20.0*
18Cr–10Ni–Cb	...	A182	F347	S34700	...	...	8	(9)(21)(28)	−425	75	30	20.0	*20.0*	*20.0*	*20.0*
18Cr–10Ni–Cb	...	A403	WP347	S34700	...	...	8	(28)(32)(37)	−425	75	30	20.0	*20.0*	*20.0*	*20.0*
18Cr–10Ni–Cb	...	A182	F348	S34800	...	...	8	(9)(21)(28)	−325	75	30	20.0	*20.0*	*20.0*	*20.0*
18Cr–10Ni–Cb	...	A403	WP348	S34800	...	...	8	(28)(32)(37)	−325	75	30	20.0	*20.0*	*20.0*	*20.0*
18Cr–10Ni–Cb	...	A182	F347H	S34709	...	...	8	(9)(21)	−325	75	30	20.0	*20.0*	*20.0*	*20.0*
18Cr–10Ni–Cb	...	A182	F348H	S34809	...	...	8	(9)(21)	−325	75	30	20.0	*20.0*	*20.0*	*20.0*
16Cr–12Ni–2Mo	...	A182	F316	S31600	...	...	8	(9)(21)(26)(28)	−325	75	30	20.0	*20.0*	*20.0*	**19.3**
16Cr–12Ni–2Mo	...	A403	WP316	S31600	...	...	8	(26)(28)(32)(37)	−425	75	30	20.0	*20.0*	*20.0*	**19.3**
18Cr–13Ni–3Mo	...	A403	WP317	S31700	...	...	8	(26)(28)(32)	−325	75	30	20.0	*20.0*	*20.0*	**19.3**
18Cr–8Ni	...	A182	F304	S30400	...	...	8	(9)(21)(26)(28)	−425	75	30	20.0	*20.0*	*20.0*	**18.6**
18Cr–8Ni	...	A403	WP304	S30400	...	...	8	(26)(28)(32)(37)	−425	75	30	20.0	*20.0*	*20.0*	**18.6**
18Cr–8Ni	...	A403	WP304H	S30409	...	...	8	(26)(32)(37)	−325	75	30	20.0	*20.0*	*20.0*	**18.6**
18Cr–8Ni	...	A182	F304H	S30409	...	...	8	(9)(21)(26)	−325	75	30	20.0	*20.0*	*20.0*	**18.6**
44Fe–25Ni–21Cr–Mo	...	A182	F904L	N08904	...	...	45	...	−325	71	31	20.7	*20.7*	**20.4**	**18.7**
13Cr	...	A182	F6a	S41000	1	...	6	(35)	−20	70	40	23.3	23.3	22.9	22.5
13Cr	...	A182	F6a	S41000	2	...	6	(35)	−20	85	55	28.3	28.3	27.8	27.3
20Cr–18Ni–6Mo	...	A182	F44	S31254	...	...	8	...	−325	94	44	29.3	*29.3*	*28.9*	*26.7*
20Cr–18Ni–6Mo	...	A403	WPS31254	S31254	...	...	8	...	−325	94	44	29.3	*29.3*	*28.9*	*26.7*
20Cr–18Ni–6Mo	...	A403	CRS31254	S31254	...	...	8	...	−325	94	44	29.3	*29.3*	*28.9*	*26.7*
46Fe–24Ni–21Cr–6Mo–Cu–N	Forgings	A182	F62	N08367	...	...	45	(26)	−325	95	45	30.0	*30.0*	*29.9*	*28.6*
46Fe–24Ni–21Cr–6Mo–Cu–N	Fittings	A403	WP6XN	N08367	...	...	45	(26)	−325	95	45	30.0	*30.0*	*29.9*	*28.6*
46Fe–24Ni–21Cr–6Mo–Cu–N	Fittings	A403	CR6XN	N08367	...	...	45	(26)	−325	95	45	30.0	*30.0*	*29.9*	*28.6*
21Cr–5Mn–1.5Ni–Cu–N	...	A815	...	S32101	...	...	10H	(25)	−20	94	65	31.3	31.3	29.8	28.5
22Cr–5.5Ni–3Mo–N	...	A182	2205	S32205	...	...	10H	(25)	−60	95	65	31.7	31.7	30.6	29.4
22Cr–5.5Ni–3Mo–N	...	A815	2205	S32205	...	...	10H	(25)	−60	95	65	31.7	31.7	30.6	29.4
25Cr–8Ni–3Mo–W–Cu–N	...	A182	...	S32760	...	...	10H	(25)	−60	109	80	36.3	36.3	34.8	34.0
25Cr–8Ni–3Mo–W–Cu–N	...	A815	...	S32760	...	...	10H	(25)	−60	109	80	36.3	36.3	34.8	34.0
13Cr	...	A182	F6a	S41000	3	...	6	(35)	−20	110	85	36.7	...	...	...
13Cr–½Mo	...	A182	F6b	S41026	...	...	6	(35)	...	110–135	90	36.7	...	...	...
25Cr–7Ni–4Mo–N	Forgings	A182	F53	S32750	...	...	10H	(25)	−60	116	80	38.7	38.5	36.4	35.1
25Cr–7Ni–4Mo–N	Fittings	A815	WPS32750	S32750	...	...	10H	(25)	−60	116	80	38.7	38.5	36.4	35.1
25Cr–7Ni–4Mo–N	Fittings	A815	CRS32750	S32750	...	...	10H	(25)	−60	116	80	38.7	38.5	36.4	35.1
13Cr	...	A182	F6a	S41000	4	...	6	(35)	−20	130	110	43.3	...	...	...

Copyright © 2015 by the American Society of Mechanical Engineers.
No reproduction may be made of this material without written consent of ASME.

Table A-1 Basic Allowable Stresses in Tension for Metals (Cont'd) (14)

Numbers in Parentheses Refer to Notes for Appendix A Tables; Specifications Are ASTM Unless Otherwise Indicated

Basic Allowable Stress, *S*, ksi, at Metal Temperature, °F [Note (1)]																					
500	600	650	700	750	800	850	900	950	1,000	1,050	1,100	1,150	1,200	1,250	1,300	1,350	1,400	1,450	1,500	Type/ Grade	Spec. No.
																				Stainless Steel (3)(4a) (Cont'd)	
																				Forgings and Fittings (2) (Cont'd)	
19.3	18.3	17.9	17.5	17.2	16.9	16.7	16.5	16.4	16.2	12.3	9.1	6.9	5.4	4.1	3.2	2.5	1.9	1.5	1.1	F321	A182
19.3	18.3	17.9	17.5	17.2	16.9	16.7	16.5	16.4	16.2	12.3	9.1	6.9	5.4	4.1	3.2	2.5	1.9	1.5	1.1	F321H	A182
19.3	18.3	17.9	17.5	17.2	16.9	16.7	16.5	16.4	16.2	12.3	9.1	6.9	5.4	4.1	3.2	2.5	1.9	1.5	1.1	WP321	A403
19.3	18.3	17.9	17.5	17.2	16.9	16.7	16.5	16.4	16.2	12.3	9.1	6.9	5.4	4.1	3.2	2.5	1.9	1.5	1.1	WP321H	A403
18.0	17.0	16.6	16.3	16.1	15.9	15.7	15.6	15.4	15.3	15.1	12.4	9.8	7.4	5.5	4.1	3.1	2.3	1.7	1.3	WP316H	A403
18.0	17.0	16.6	16.3	16.1	15.9	15.7	15.6	15.4	15.3	15.1	12.4	9.8	7.4	5.5	4.1	3.1	2.3	1.7	1.3	F316H	A182
20.0	19.3	19.0	18.7	18.5	18.3	18.2	18.1	18.1	18.1	17.4	14.1	10.5	7.9	5.9	4.4	3.2	2.5	1.8	1.3	WP347H	A403
20.0	19.3	19.0	18.7	18.5	18.3	18.2	18.1	18.1	18.1	17.4	14.1	10.5	7.9	5.9	4.4	3.2	2.5	1.8	1.3	F347	A182
20.0	19.3	19.0	18.7	18.5	18.3	18.2	18.1	18.1	18.1	17.4	14.1	10.5	7.9	5.9	4.4	3.2	2.5	1.8	1.3	WP347	A403
20.0	19.3	19.0	18.7	18.5	18.3	18.2	18.1	18.1	18.1	17.4	14.1	10.5	7.9	5.9	4.4	3.2	2.5	1.8	1.3	F348	A182
20.0	19.3	19.0	18.7	18.5	18.3	18.2	18.1	18.1	18.1	17.4	14.1	10.5	7.9	5.9	4.4	3.2	2.5	1.8	1.3	WP348	A403
20.0	19.3	19.0	18.7	18.5	18.3	18.2	18.1	18.1	18.1	17.4	14.1	10.5	7.9	5.9	4.4	3.2	2.5	1.8	1.3	F347H	A182
20.0	19.3	19.0	18.7	18.5	18.3	18.2	18.1	18.1	18.1	17.4	14.1	10.5	7.9	5.9	4.4	3.2	2.5	1.8	1.3	F348H	A182
18.0	17.0	16.6	16.3	16.1	15.9	15.7	15.6	15.4	15.3	15.1	12.4	9.8	7.4	5.5	4.1	3.1	2.3	1.7	1.3	F316	A182
18.0	17.0	16.6	16.3	16.1	15.9	15.7	15.6	15.4	15.3	15.1	12.4	9.8	7.4	5.5	4.1	3.1	2.3	1.7	1.3	WP316	A403
18.0	17.0	16.6	16.3	16.1	15.9	15.7	15.6	15.4	15.3	15.1	12.4	9.8	7.4	5.5	4.1	3.1	2.3	1.7	1.3	WP317	A403
17.5	16.6	16.2	15.8	15.5	15.2	14.9	14.6	14.3	14.0	12.4	9.8	7.7	6.1	4.7	3.7	2.9	2.3	1.8	1.4	F304	A182
17.5	16.6	16.2	15.8	15.5	15.2	14.9	14.6	14.3	14.0	12.4	9.8	7.7	6.1	4.7	3.7	2.9	2.3	1.8	1.4	WP304	A403
17.5	16.6	16.2	15.8	15.5	15.2	14.9	14.6	14.3	14.0	12.4	9.8	7.7	6.1	4.7	3.7	2.9	2.3	1.8	1.4	WP304H	A403
17.5	16.6	16.2	15.8	15.5	15.2	14.9	14.6	14.3	14.0	12.4	9.8	7.7	6.1	4.7	3.7	2.9	2.3	1.8	1.4	F304H	A182
17.1	...	...	...	...	...	...	...	...	...	...	...	...	...	...	...	...	...	...	...	F904L	A182
22.1	21.6	21.2	20.6	20.0	19.2	17.2	12.3	8.8	6.4	...	...	...	...	...	...	...	...	...	...	F6a Cl. 1	A182
26.9	26.2	25.7	25.1	24.3	23.3	17.2	12.3	8.8	6.4	4.4	2.9	1.8	1.0	...	...	...	...	...	...	F6a Cl. 2	A182
25.2	24.1	23.8	23.6	23.4	23.2	23.0	...	...	...	...	...	...	...	...	...	...	...	...	...	F44	A182
25.2	24.1	23.8	23.6	23.4	23.2	23.0	...	...	...	...	...	...	...	...	...	...	...	...	...	WPS31254	A403
25.2	24.1	23.8	23.6	23.4	23.2	23.0	...	...	...	...	...	...	...	...	...	...	...	...	...	CRS31254	A403
27.7	26.2	25.7	25.1	24.7	24.3	...	...	...	...	...	...	...	...	...	...	...	...	...	...	F62	A182
27.7	26.2	25.7	25.1	24.7	24.3	...	...	...	...	...	...	...	...	...	...	...	...	...	...	WP6XN	A403
27.7	26.2	25.7	25.1	24.7	24.3	...	...	...	...	...	...	...	...	...	...	...	...	...	...	CR6XN	A403
28.5	28.5	...	...	...	...	...	...	...	...	...	...	...	...	...	...	...	...	...	...	...	A815
28.7	28.4	...	...	...	...	...	...	...	...	...	...	...	...	...	...	...	...	...	...	2205	A182
28.7	28.4	...	...	...	...	...	...	...	...	...	...	...	...	...	...	...	...	...	...	2205	A815
33.9	33.9	...	...	...	...	...	...	...	...	...	...	...	...	...	...	...	...	...	...	...	A182
33.9	33.9	...	...	...	...	...	...	...	...	...	...	...	...	...	...	...	...	...	...	...	A815
...	...	...	...	...	...	...	...	...	...	...	...	...	...	...	...	...	...	...	...	F6a Cl. 3	A182
...	...	...	...	...	...	...	...	...	...	...	...	...	...	...	...	...	...	...	...	F6b	A182
34.5	34.3	...	...	...	...	...	...	...	...	...	...	...	...	...	...	...	...	...	...	F53	A182
34.5	34.3	...	...	...	...	...	...	...	...	...	...	...	...	...	...	...	...	...	...	WPS32750	A815
34.5	34.3	...	...	...	...	...	...	...	...	...	...	...	...	...	...	...	...	...	...	CRS32750	A815
...	...	...	...	...	...	...	...	...	...	...	...	...	...	...	...	...	...	...	...	F6a Cl. 4	A182

Copyright © 2015 by the American Society of Mechanical Engineers.
No reproduction may be made of this material without written consent of ASME.

(14)

Table A-1 Basic Allowable Stresses in Tension for Metals (Cont'd)

Numbers in Parentheses Refer to Notes for Appendix A Tables; Specifications Are ASTM Unless Otherwise Indicated

Material	Product Form	Spec. No.	Type/ Grade	UNS No.	Class/ Condition/ Temper	Size, in.	P-No. (5)	Notes	Min. Temp., °F (6)	Specified Min. Strength, ksi Tensile	Specified Min. Strength, ksi Yield	Min. Temp. to 100	200	300	400
Stainless Steel (3)(4a) (Cont'd)															
Bar															
18Cr–8Ni	...	A479	304	S30400	...	...	8	(26)(28)(31)	−425	75	30	20.0	20.0	20.0	18.6
18Cr–8Ni	...	A479	304H	S30409	...	...	8	(26)(31)	−325	75	30	20.0	*20.0*	*20.0*	**18.7**
18Cr–8Ni	...	A479	304L	S30403	...	...	8	(31)	−425	70	25	16.7	*16.7*	*16.7*	*15.8*
16Cr–12Ni–2Mo	...	A479	316	S31600	...	...	8	(26)(28)(31)	−325	75	30	20.0	*20.0*	*20.0*	**19.3**
16Cr–12Ni–2Mo	...	A479	316H	S31609	...	...	8	(26)(31)	−325	75	30	20.0	*20.0*	*20.0*	**19.3**
16Cr–12Ni–2Mo	...	A479	316L	S31603	...	...	8	(31)	−425	70	25	16.7	*16.7*	*16.7*	**15.5**
18Cr–10Ni–Ti	...	A479	321	S32100	...	...	8	...	−325	75	30	20.0	*20.0*	*20.0*	**20.0**
18Cr–10Ni–Ti	...	A479	321	S32100	...	...	8	(28)(30)	−325	75	30	20.0	*20.0*	*20.0*	**20.0**
18Cr–10Ni–Ti	...	A479	321H	S32109	...	...	8	...	−325	75	30	20.0	*20.0*	*20.0*	**20.0**
18Cr–10Ni–Cb	...	A479	347	S34700	...	...	8	...	−425	75	30	20.0	20.0	20.0	20.0
18Cr–10Ni–Cb	...	A479	347	S34700	...	...	8	(28)(30)	−425	75	30	20.0	20.0	20.0	20.0
18Cr–10Ni–Cb	...	A479	347H	S34709	...	...	8	...	−325	75	30	20.0	20.0	20.0	20.0
44Fe–25Ni–21Cr–Mo	...	A479	904L	N08904	...	...	45	...	−325	71	31	20.7	*20.7*	**20.4**	**18.7**
20Cr–18Ni–6Mo	...	A479	...	S31254	...	...	8	...	−325	95	45	30.0	*30.0*	*29.5*	*27.3*
46Fe–24Ni–21Cr–6Mo–Cu–N	...	A479	...	N08367	...	...	45	(26)	−325	95	45	30.0	*30.0*	*29.9*	*28.6*
21Cr–5Mn–1.5Ni–Cu–N	...	A479	...	S32101	...	...	10H	(25)	−20	94	65	31.3	31.3	29.8	28.5
22Cr–5.5Ni–3Mo–N	...	A479	2205	S32205	...	...	10H	(25)	−60	95	65	31.7	31.7	30.6	29.4
22Cr–13Ni–5Mn	...	A479	XM-19	S20910	...	...	8	...	−20	100	55	33.3	*33.1*	*31.4*	*30.4*
29Cr–6.5Ni–2Mo–N	...	A479	...	S32906	...	...	10H	(25)	−60	109	80	36.3	36.3	34.5	33.5
25Cr–7Ni–4Mo–N	...	A479	...	S32750	...	≤2 thk.	10H	(25)	−60	116	80	38.7	38.5	36.4	35.1
Castings (2)															
28Ni–20Cr–2Mo–3Cb	...	A351	CN7M	J95150	...	...	45	(9)(30)	−325	62	25	16.7	...	...	...
35Ni–15Cr–Mo	...	A351	HT30	N08603	...	...	45	(36)(39)	−325	65	28	18.7	...	...	...
25Cr–13Ni	...	A351	CH8	J93400	...	...	8	(9)(31)	−325	65	28	18.7	*18.7*	*18.5*	*18.0*
25Cr–20Ni	...	A351	CK20	J94202	...	...	8	(9)(27)(31)(35)(39)	−325	65	28	18.7	*18.7*	*18.5*	*18.0*
15Cr–15Ni–2Mo–Cb	...	A351	CF10MC	...	...	...	8	(30)	−325	70	30	20.0	...	...	...
18Cr–8Ni	...	A351	CF3	J92500	...	...	8	(9)	−425	70	30	20.0	*20.0*	**20.0**	**18.6**
17Cr–10Ni–2Mo	...	A351	CF3M	J92800	...	...	8	(9)	−425	70	30	20.0	*20.0*	20.0	19.2
18Cr–8Ni	...	A351	CF8	J92600	...	...	8	(9)(26)(27)(31)	−425	70	30	20.0	*20.0*	**20.0**	**18.6**
25Cr–13Ni	...	A351	CH10	J93401	...	...	8	(27)(31)(35)	−325	70	30	20.0	*20.0*	*20.0*	*20.0*
25Cr–13Ni	...	A351	CH20	J93402	...	...	8	(9)(27)(31)(35)(39)	−325	70	30	20.0	*20.0*	*20.0*	*20.0*
20Cr–10Ni–Cb	...	A351	CF8C	J92710	...	...	8	(9)(27)(30)	−325	70	30	20.0	*20.0*	*20.0*	*20.0*
18Cr–10Ni–2Mo	...	A351	CF8M	J92900	...	...	8	(9)(26)(27)(30)	−425	70	30	20.0	*20.0*	*20.0*	**18.6**
25Cr–20Ni	...	A351	HK40	J94204	...	...	8	(35)(36)(39)	−325	62	35	20.7	...	...	...
25Cr–20Ni	...	A351	HK30	J94203	...	...	8	(35)(39)	−325	65	35	21.7	...	...	...
18Cr–8Ni	...	A351	CF3A	J92500	...	...	8	(9)(56)	−425	77	35	23.3	23.3	22.7	21.7
18Cr–8Ni	...	A351	CF8A	J92600	...	...	8	(9)(26)(56)	−425	77	35	23.3	23.3	22.7	21.7
25Cr–10Ni–N	...	A351	CE20N	J92802	...	...	8	(35)(39)	−325	80	40	26.7	26.7	26.7	26.7
12Cr	...	A217	CA15	J91150	...	...	6	(35)	−20	90	65	30.0	30.0	29.4	28.9
24Cr–10Ni–Mo–N	...	A351	CE8MN	...	...	...	10H	(9)	−60	95	65	31.7	31.6	29.3	28.2
25Cr–8Ni–3Mo–W–Cu–N	...	A351	CD3M-WCuN	...	...	...	10H	(9)(25)	−60	100	65	33.3	33.2	31.4	30.3
13Cr–4Ni	...	A487	CA6NM	J91540	A	...	6	(9)(35)	−20	110	80	36.7	36.7	35.9	35.3

Copyright © 2015 by the American Society of Mechanical Engineers.
No reproduction may be made of this material without written consent of ASME.

Table A-1 Basic Allowable Stresses in Tension for Metals (Cont'd) (14)

Numbers in Parentheses Refer to Notes for Appendix A Tables; Specifications Are ASTM Unless Otherwise Indicated

Basic Allowable Stress, *S*, ksi, at Metal Temperature, °F [Note (1)]																					
500	600	650	700	750	800	850	900	950	1,000	1,050	1,100	1,150	1,200	1,250	1,300	1,350	1,400	1,450	1,500	Type/ Grade	Spec. No.
																				Stainless Steel (3)(4a) (Cont'd)	
																					Bar
17.5	16.6	16.2	15.8	15.5	15.2	14.9	14.6	14.3	14.0	12.4	9.8	7.7	6.1	4.7	3.7	2.9	2.3	1.8	1.4	304	A479
17.5	16.4	16.2	16.0	15.6	15.2	14.9	14.6	14.4	13.8	12.2	9.7	7.7	6.0	4.7	3.7	2.9	2.3	1.8	1.4	304H	A479
14.8	14.0	13.7	13.5	13.3	13.0	12.8	11.9	9.9	7.8	6.3	5.1	4.0	3.2	2.6	2.1	1.7	1.1	1.0	0.9	304L	A479
17.9	17.0	16.7	16.3	16.1	15.9	15.7	15.5	15.4	15.3	14.5	12.4	9.8	7.4	5.5	4.1	3.1	2.3	1.7	1.3	316	A479
17.9	17.0	16.7	16.3	16.1	15.9	15.7	15.5	15.4	15.3	14.5	12.4	9.8	7.4	5.5	4.1	3.1	2.3	1.7	1.3	316H	A479
14.4	13.5	13.2	12.9	12.6	12.4	12.1	11.8	11.5	11.2	10.8	10.2	8.8	6.4	4.7	3.5	2.5	1.8	1.3	1.0	316L	A479
19.3	18.3	17.9	17.5	17.2	16.9	16.7	16.5	16.4	16.2	9.6	6.9	5.0	3.6	2.6	1.7	1.1	0.8	0.5	0.3	321	A479
19.3	18.3	17.9	17.5	17.2	16.9	16.7	16.5	16.4	16.2	12.3	9.1	6.9	5.4	4.1	3.2	2.5	1.9	1.5	1.1	321	A479
19.3	18.3	17.9	17.5	17.2	16.9	16.7	16.5	16.4	16.2	12.3	9.1	6.9	5.4	4.1	3.2	2.5	1.9	1.5	1.1	321H	A479
20.0	19.3	19.0	18.7	18.5	18.3	18.2	18.1	18.1	16.0	12.1	9.1	6.1	4.4	3.3	2.2	1.5	1.2	0.9	0.8	347	A479
20.0	19.3	19.0	18.7	18.5	18.3	18.2	18.1	18.1	18.1	17.4	14.1	10.5	7.9	5.9	4.4	3.2	2.5	1.8	1.3	347	A479
20.0	19.3	19.0	18.7	18.5	18.3	18.2	18.1	18.1	18.1	17.4	14.1	10.5	7.9	5.9	4.4	3.2	2.5	1.8	1.3	347H	A479
17.1	...	...	...	...	...	...	...	...	...	...	...	...	...	...	...	...	...	...	...	904L	A479
25.8	24.7	24.3	24.1	23.9	23.7	23.6	...	...	...	...	...	...	...	...	...	...	...	...	...	...	A479
27.7	26.2	25.7	25.1	24.7	24.3	...	...	...	...	...	...	...	...	...	...	...	...	...	...	...	A479
28.5	28.5	...	...	...	...	...	...	...	...	...	...	...	...	...	...	...	...	...	...	...	A479
28.7	28.4	...	...	...	...	...	...	...	...	...	...	...	...	...	...	...	...	...	...	2205	A479
29.7	29.2	29.0	28.8	28.6	28.3	27.9	27.5	27.0	26.3	25.5	20.4	13.0	8.3	...	...	...	...	...	...	XM-19	A479
33.0	33.0	...	...	...	...	...	...	...	...	...	...	...	...	...	...	...	...	...	...	...	A479
34.5	34.3	...	...	...	...	...	...	...	...	...	...	...	...	...	...	...	...	...	...	...	A479
																				Castings (2)	
...	...	...	...	...	...	...	...	...	...	...	...	...	...	...	...	...	...	...	...	CN7M	A351
...	...	...	...	...	...	...	...	...	...	...	...	...	...	...	...	...	...	...	...	HT30	A351
17.7	17.1	16.7	16.3	15.9	15.4	14.9	14.4	13.9	11.1	8.5	6.5	5.0	3.8	2.9	2.3	1.8	1.3	0.9	0.8	CH8	A351
17.7	17.1	16.7	16.3	15.9	15.4	14.9	14.4	13.9	11.3	9.8	8.5	7.3	6.0	4.8	3.5	2.4	1.6	1.1	0.8	CK20	A351
...	...	...	...	...	...	...	...	...	...	...	...	...	...	...	...	...	...	...	...	CF10MC	A351
17.5	16.6	16.2	15.8	15.5	15.2	...	...	...	...	...	...	...	...	...	...	...	...	...	...	CF3	A351
17.9	17.0	16.6	16.3	16.0	15.8	15.7	...	...	...	...	...	...	...	...	...	...	...	...	...	CF3M	A351
17.5	16.6	16.2	15.8	15.5	15.2	14.9	14.6	14.3	12.2	9.5	7.5	6.0	4.8	3.9	3.3	2.7	2.3	2.0	1.7	CF8	A351
20.0	20.0	20.0	20.0	20.0	20.0	20.0	20.0	20.0	11.1	8.5	6.5	5.0	3.8	2.9	2.3	1.8	1.3	0.9	0.8	CH10	A351
20.0	20.0	20.0	20.0	20.0	20.0	20.0	20.0	20.0	11.1	8.5	6.5	5.0	3.8	2.9	2.3	1.8	1.3	0.9	0.8	CH20	A351
20.0	20.0	...	...	...	...	...	...	...	...	...	...	...	...	...	...	...	...	...	...	CF8C	A351
17.5	16.6	16.2	15.8	15.5	15.2	14.9	14.6	14.3	14.0	12.1	9.1	6.1	4.4	3.3	2.2	1.5	1.2	0.9	0.8	CF8M	A351
...	...	...	...	...	...	...	...	...	...	...	...	...	...	...	...	...	...	...	...	HK40	A351
...	...	...	...	...	...	...	...	...	...	...	...	...	...	...	...	...	...	...	...	HK30	A351
20.4	19.3	18.9	18.5	...	...	...	...	...	...	...	...	...	...	...	...	...	...	...	...	CF3A	A351
20.4	19.3	18.9	18.5	...	...	...	...	...	...	...	...	...	...	...	...	...	...	...	...	CF8A	A351
26.7	26.7	26.7	26.7	26.7	26.7	26.7	26.7	...	...	...	...	...	...	...	...	...	...	...	...	CE20N	A351
28.4	27.7	27.2	26.5	17.5	16.8	14.9	11.0	7.6	5.0	3.3	2.3	1.5	1.0	...	...	...	...	...	...	CA15	A217
28.2	28.2	...	...	...	...	...	...	...	...	...	...	...	...	...	...	...	...	...	...	CE8MN	A351
29.8	29.6	...	...	...	...	...	...	...	...	...	...	...	...	...	...	...	...	...	...	CD3M-WCuN	A351
34.8	33.9	33.3	32.4	...	...	...	...	...	...	...	...	...	...	...	...	...	...	...	...	CA6NM Cl. A	A487

Copyright © 2015 by the American Society of Mechanical Engineers.
No reproduction may be made of this material without written consent of ASME.

Table A-1 Basic Allowable Stresses in Tension for Metals (Cont'd)

Numbers in Parentheses Refer to Notes for Appendix A Tables; Specifications Are ASTM Unless Otherwise Indicated

Nominal Composition	Product Form	Spec. No.	UNS No.	Class/ Condition/ Temper	Size Range, in.	P-No. (5)(7)	Notes	Min. Temp., °F (6)	Specified Min. Strength, ksi Tensile	Specified Min. Strength, ksi Yield
Copper and Copper Alloy Pipes and Tubes (2)										
. . .	Pipe	B42	C10200	O61	. . .	31	. . .	−452	30	9
. . .	Pipe	B42	C12000	O61	. . .	31	. . .	−452	30	9
. . .	Pipe	B42	C12200	O61	. . .	31	. . .	−452	30	9
. . .	Tube	B75	C10200	O50	. . .	31	. . .	−452	30	9
. . .	Tube	B75	C10200	O60	. . .	31	. . .	−452	30	9
. . .	Tube	B75	C12000	O50	. . .	31	. . .	−452	30	9
. . .	Tube	B75	C12000	O60	. . .	31	. . .	−452	30	9
. . .	Tube	B75	C12200	O50	. . .	31	. . .	−452	30	9
. . .	Tube	B75	C12200	O60	. . .	31	. . .	−452	30	9
. . .	Tube	B68	C12200	O50	. . .	31	(24)	−452	30	9
. . .	Tube	B68	C12200	O60	. . .	31	(24)	−452	30	9
. . .	Tube	B88	C12200	O50	. . .	31	(24)	−452	30	9
. . .	Tube	B88	C12200	O60	. . .	31	(24)	−452	30	9
. . .	Tube	B280	C12200	O60	. . .	31	(24)	−452	30	9
Red brass	Pipe	B43	C23000	O61	. . .	32	. . .	−452	40	12
90Cu–10Ni	. . .	B467	C70600	WO50	> 4.5 O.D.	34	(14)	−452	38	13
90Cu–10Ni	. . .	B467	C70600	WO61	> 4.5 O.D.	34	(14)	−452	38	13
90Cu–10Ni	. . .	B466	C70600	Annealed	. . .	34	(14)	−452	38	13
90Cu–10Ni	. . .	B467	C70600	WO50	≤ 4.5 O.D.	34	(14)	−452	40	15
90Cu–10Ni	. . .	B467	C70600	WO61	≤ 4.5 O.D.	34	(14)	−452	40	15
70Cu–30Ni	. . .	B467	C71500	WO50	> 4.5 O.D.	34	(14)	−452	45	15
70Cu–30Ni	. . .	B467	C71500	WO61	> 4.5 O.D.	34	(14)	−452	45	15
80Cu–20Ni	. . .	B466	C71000	Annealed	≤ 4.5 O.D.	34	(14)	−452	45	16
. . .	Pipe	B42	C10200	H55	NPS 2½ thru 12	31	(14)(34)	−452	36	30
. . .	Pipe	B42	C12000	H55	NPS 2½ thru 12	31	(14)(34)	−452	36	30
. . .	Pipe	B42	C12200	H55	NPS 2½ thru 12	31	(14)(34)	−452	36	30
. . .	Tube	B75	C10200	H58	. . .	31	(14)(34)	−452	36	30
. . .	Tube	B75	C12000	H58	. . .	31	(14)(34)	−452	36	30
. . .	Tube	B75	C12200	H58	. . .	31	(14)(34)	−452	36	30
. . .	Tube	B88	C12200	H58	. . .	31	(14)(24)(34)	−452	36	30
70Cu–30Ni	. . .	B466	C71500	O60	. . .	34	(14)	−452	52	18
70Cu–30Ni	. . .	B467	C71500	WO50	≤ 4.5 O.D.	34	(14)	−452	50	20
70Cu–30Ni	. . .	B467	C71500	WO61	≤ 4.5 O.D.	34	(14)	−452	50	20
. . .	Pipe	B42	C10200	H80	NPS ⅛ thru 2	31	(14)(34)	−452	45	40
. . .	Pipe	B42	C12000	H80	NPS ⅛ thru 2	31	(14)(34)	−452	45	40
. . .	Pipe	B42	C12200	H80	NPS ⅛ thru 2	31	(14)(34)	−452	45	40
. . .	Tube	B75	C10200	H80	. . .	31	(14)(34)	−452	45	40
. . .	Tube	B75	C12000	H80	. . .	31	(14)(34)	−452	45	40
. . .	Tube	B75	C12200	H80	. . .	31	(14)(34)	−452	45	40
Plates and Sheets										
. . .	. . .	B152	C10200	O25	. . .	31	(14)(24)	−452	30	10
. . .	. . .	B152	C10400	O25	. . .	31	(14)(24)	−452	30	10
. . .	. . .	B152	C10500	O25	. . .	31	(14)(24)	−452	30	10
. . .	. . .	B152	C10700	O25	. . .	31	(14)(24)	−452	30	10
. . .	. . .	B152	C12200	O25	. . .	31	(14)(24)	−452	30	10
. . .	. . .	B152	C12300	O25	. . .	31	(14)(24)	−452	30	10

Copyright © 2015 by the American Society of Mechanical Engineers.
No reproduction may be made of this material without written consent of ASME.

Table A-1 Basic Allowable Stresses in Tension for Metals (Cont'd)

Numbers in Parentheses Refer to Notes for Appendix A Tables; Specifications Are ASTM Unless Otherwise Indicated

Basic Allowable Stress, *S*, ksi, at Metal Temperature, °F [Note (1)]														
Min. Temp. to 100	150	200	250	300	350	400	450	500	550	600	650	700	UNS No.	Spec. No.
													Copper and Copper Alloy Pipes and Tubes (2)	
6.0	5.1	4.9	4.8	4.7	4.0	3.0	2.3	1.7	...	...	...	...	C10200	B42
6.0	5.1	4.9	4.8	4.7	4.0	3.0	2.3	1.7	...	...	...	...	C12000	B42
6.0	5.1	4.9	4.8	4.7	4.0	3.0	2.3	1.7	...	...	...	...	C12200	B42
6.0	5.1	4.9	4.8	4.7	4.0	3.0	2.3	1.7	...	...	...	...	C10200	B75
6.0	5.1	4.9	4.8	4.7	4.0	3.0	2.3	1.7	...	...	...	...	C10200	B75
6.0	5.1	4.9	4.8	4.7	4.0	3.0	2.3	1.7	...	...	...	...	C12000	B75
6.0	5.1	4.9	4.8	4.7	4.0	3.0	2.3	1.7	...	...	...	...	C12000	B75
6.0	5.1	4.9	4.8	4.7	4.0	3.0	2.3	1.7	...	...	...	...	C12200	B75
6.0	5.1	4.9	4.8	4.7	4.0	3.0	2.3	1.7	...	...	...	...	C12200	B75
6.0	5.1	4.9	4.8	4.7	4.0	3.0	2.3	1.7	...	...	...	...	C12200	B68
6.0	5.1	4.9	4.8	4.7	4.0	3.0	2.3	1.7	...	...	...	...	C12200	B68
6.0	5.1	4.9	4.8	4.7	4.0	3.0	2.3	1.7	...	...	...	...	C12200	B88
6.0	5.1	4.9	4.8	4.7	4.0	3.0	2.3	1.7	...	...	...	...	C12200	B88
6.0	5.1	4.9	4.8	4.7	4.0	3.0	2.3	1.7	...	...	...	...	C12200	B280
8.0	7.9	7.9	7.9	7.9	7.0	5.0	2.0	...	...	...	...	...	C23000	B43
8.7	8.4	8.2	8.0	7.8	7.7	7.5	7.4	7.3	7.0	6.0	...	...	C70600	B467
8.7	8.4	8.2	8.0	7.8	7.7	7.5	7.4	7.3	7.0	6.0	...	...	C70600	B467
8.7	8.4	8.2	8.0	7.8	7.7	7.5	7.4	7.3	7.0	6.0	...	...	C70600	B466
10.0	9.7	9.5	9.3	9.1	8.9	8.7	8.5	8.0	7.0	6.0	...	...	C70600	B467
10.0	9.7	9.5	9.3	9.1	8.9	8.7	8.5	8.0	7.0	6.0	...	...	C70600	B467
10.0	9.6	9.4	9.2	9.0	8.8	8.6	8.4	8.2	8.1	8.0	7.9	7.8	C71500	B467
10.0	9.6	9.4	9.2	9.0	8.8	8.6	8.4	8.2	8.1	8.0	7.9	7.8	C71500	B467
10.7	10.6	10.5	10.4	10.2	10.1	9.9	9.6	9.3	8.9	8.4	7.7	7.0	C71000	B466
12.0	11.6	10.9	10.4	10.0	9.8	9.5	...	...	...	...	...	...	C10200	B42
12.0	11.6	10.9	10.4	10.0	9.8	9.5	...	...	...	...	...	...	C12000	B42
12.0	11.6	10.9	10.4	10.0	9.8	9.5	...	...	...	...	...	...	C12200	B42
12.0	11.6	10.9	10.4	10.0	9.8	9.5	...	...	...	...	...	...	C10200	B75
12.0	11.6	10.9	10.4	10.0	9.8	9.5	...	...	...	...	...	...	C12000	B75
12.0	11.6	10.9	10.4	10.0	9.8	9.5	...	...	...	...	...	...	C12200	B75
12.0	11.6	10.9	10.4	10.0	9.8	9.5	...	...	...	...	...	...	C12200	B88
12.0	11.6	11.3	11.0	10.8	10.6	10.3	10.1	9.9	9.8	9.6	9.5	9.4	C71500	B466
13.3	12.9	12.6	12.3	12.0	11.7	11.5	11.2	11.0	10.8	10.7	10.5	10.4	C71500	B467
13.3	12.9	12.6	12.3	12.0	11.7	11.5	11.2	11.0	10.8	10.7	10.5	10.4	C71500	B467
15.0	14.5	13.6	13.0	12.6	12.2	4.3	...	...	...	...	...	...	C10200	B42
15.0	14.5	13.6	13.0	12.6	12.2	4.3	...	...	...	...	...	...	C12000	B42
15.0	14.5	13.6	13.0	12.6	12.2	4.3	...	...	...	...	...	...	C12200	B42
15.0	14.5	13.6	13.0	12.6	12.2	4.3	...	...	...	...	...	...	C10200	B75
15.0	14.5	13.6	13.0	12.6	12.2	4.3	...	...	...	...	...	...	C12000	B75
15.0	14.5	13.6	13.0	12.6	12.2	4.3	...	...	...	...	...	...	C12200	B75
													Plates and Sheets	
6.7	5.7	5.4	5.3	5.0	4.0	3.0	2.3	1.7	...	...	...	...	C10200	B152
6.7	5.7	5.4	5.3	5.0	4.0	3.0	2.3	1.7	...	...	...	...	C10400	B152
6.7	5.7	5.4	5.3	5.0	4.0	3.0	2.3	1.7	...	...	...	...	C10500	B152
6.7	5.7	5.4	5.3	5.0	4.0	3.0	2.3	1.7	...	...	...	...	C10700	B152
6.7	5.7	5.4	5.3	5.0	4.0	3.0	2.3	1.7	...	...	...	...	C12200	B152
6.7	5.7	5.4	5.3	5.0	4.0	3.0	2.3	1.7	...	...	...	...	C12300	B152

Copyright © 2015 by the American Society of Mechanical Engineers.
No reproduction may be made of this material without written consent of ASME.

Table A-1 Basic Allowable Stresses in Tension for Metals (Cont'd)

Numbers in Parentheses Refer to Notes for Appendix A Tables; Specifications Are ASTM Unless Otherwise Indicated

Nominal Composition	Product Form	Spec. No.	UNS No.	Class/ Condition/ Temper	Size Range, in.	P-No. (5)(7)	Notes	Min. Temp., °F (6)	Specified Min. Strength, ksi Tensile	Specified Min. Strength, ksi Yield
Copper and Copper Alloy (Cont'd)										
Plates and Sheets (Cont'd)										
90Cu–10Ni	...	B171	C70600	...	≤ 2.5 thk.	34	(14)	−452	40	15
Cu–Si	...	B96	C65500	O61	...	33	...	−452	52	18
70Cu–30Ni	...	B171	C71500	...	≤ 2.5 thk.	34	(14)	−452	50	20
Al–bronze	...	B169	C61400	O25	≤ 2.0 thk.	35	(13)	−452	70	30
Al–bronze	...	B169	C61400	O60	≤ 2.0 thk.	35	(13)	−452	70	30
Forgings										
Cu	...	B283	C11000	...	...	31	(14)	−452	33	11
High Si–bronze (A)	...	B283	C65500	...	...	33	(14)	−452	52	18
Forging brass	...	B283	C37700	...	...	a	(14)	−325	58	23
Leaded naval brass	...	B283	C48500	...	...	a	(14)	−325	62	24
Naval brass	...	B283	C46400	...	...	32	(14)	−425	64	26
Mn–bronze (A)	...	B283	C67500	...	...	32	(14)	−325	72	34
Castings (2)										
Composition bronze	...	B62	C83600	...	...	a	(9)	−325	30	14
Leaded Ni–bronze	...	B584	C97300	...	...	a	...	−325	30	15
Leaded Ni–bronze	...	B584	C97600	...	...	a	...	−325	40	17
Leaded Sn–bronze	...	B584	C92300	...	...	a	...	−325	36	16
Leaded Sn–bronze	...	B584	C92200	...	...	a	...	−325	34	16
Steam bronze	...	B61	C92200	...	...	a	(9)	−325	34	16
Sn–bronze	...	B584	C90300	...	...	b	...	−325	40	18
Sn–bronze	...	B584	C90500	...	...	b	...	−325	40	18
Leaded Mn–bronze	...	B584	C86400	...	...	a	(9)	−325	60	20
Leaded Ni–bronze	...	B584	C97800	...	...	a	...	−325	50	22
No. 1 Mn–bronze	...	B584	C86500	...	...	b	...	−325	65	25
Al–bronze	...	B148	C95200	...	...	35	(9)	−425	65	25
Al–bronze	...	B148	C95300	...	...	35	(9)	−425	65	25
Si–Al–bronze	...	B148	C95600	...	...	35	...	−325	60	28
Al–bronze	...	B148	C95400	...	...	35	...	−325	75	30
Mn–bronze	...	B584	C86700	...	...	a	...	−325	80	32
Al–bronze	...	B148	C95500	...	...	35	...	−452	90	40
High strength Mn–bronze	...	B584	C86200	...	...	b	...	−325	90	45
High strength Mn–bronze	...	B584	C86300	...	...	b	...	−325	110	60
Rod										
Si–brass	...	B371	C69300	H02	≤ ½	a	...	−325	85	45
Si–brass	...	B371	C69300	H02	> ½, ≤ 1	a	...	−325	75	35
Si–brass	...	B371	C69300	H02	> 1, ≤ 2	a	...	−325	70	30

Copyright © 2015 by the American Society of Mechanical Engineers.
No reproduction may be made of this material without written consent of ASME.

Table A-1 Basic Allowable Stresses in Tension for Metals (Cont'd)

Numbers in Parentheses Refer to Notes for Appendix A Tables; Specifications Are ASTM Unless Otherwise Indicated

Basic Allowable Stress, *S*, ksi, at Metal Temperature, °F [Note (1)]														
Min. Temp. to 100	150	200	250	300	350	400	450	500	550	600	650	700	UNS No.	Spec. No.
														Copper and Copper Alloy (Cont'd) Plates and Sheets (Cont'd)
10.0	9.7	9.5	9.3	9.1	8.9	8.7	8.5	8.0	7.0	6.0	...	...	C70600	B171
12.0	11.9	11.9	11.7	11.6	10.0	...	...	...	...	...	...	...	C65500	B96
13.3	12.9	12.6	12.3	12.0	11.7	11.5	11.2	11.0	10.8	10.7	10.5	10.4	C71500	B171
20.0	19.9	19.8	19.7	19.5	19.4	19.2	19.0	18.8	...	...	...	...	C61400	B169
20.0	19.9	19.8	19.7	19.5	19.4	19.2	19.0	18.8	...	...	...	...	C61400	B169
														Forgings
7.3	6.2	6.0	5.8	5.0	4.0	3.0	2.3	1.7	...	...	...	...	C11000	B283
12.0	11.9	11.9	11.7	11.6	10.0	6.7	...	...	...	...	...	...	C65500	B283
15.3	14.5	13.9	13.3	10.5	7.5	2.0	...	...	...	...	...	...	C37700	B283
16.0	16.0	16.0	16.0	16.0	16.0	16.0	...	...	...	...	...	...	C48500	B283
17.3	17.3	17.3	17.3	17.1	6.3	2.5	...	...	...	...	...	...	C46400	B283
22.7	22.7	22.7	22.7	22.7	22.7	22.7	...	...	...	...	...	...	C67500	B283
														Castings (2)
9.3	9.3	9.2	8.6	8.1	7.7	7.4	7.3	...	...	...	...	...	C83600	B62
10.0	...	...	...	...	...	...	...	...	...	...	...	...	C97300	B584
11.3	10.1	9.5	9.1	8.7	...	...	...	...	...	...	...	...	C97600	B584
10.7	10.7	10.7	10.7	10.7	10.7	10.7	...	...	...	...	...	...	C92300	B584
10.7	9.6	9.5	9.4	9.2	8.9	8.6	...	...	...	...	...	...	C92200	B584
10.7	9.6	9.5	9.4	9.2	8.9	8.6	8.4	8.3	8.3	...	...	...	C92200	B61
12.0	12.0	12.0	12.0	12.0	12.0	12.0	...	...	...	...	...	...	C90300	B584
12.0	12.0	12.0	12.0	12.0	12.0	12.0	...	...	...	...	...	...	C90500	B584
13.3	13.3	13.3	13.3	13.3	13.3	...	...	...	...	...	...	...	C86400	B584
14.7	14.7	14.7	14.7	14.7	14.7	...	...	...	...	...	...	...	C97800	B584
16.7	16.7	16.7	16.7	16.7	16.7	...	...	...	...	...	...	...	C86500	B584
16.7	15.7	15.2	14.8	14.5	14.3	14.2	14.1	14.1	11.7	7.4	...	...	C95200	B148
16.7	16.7	16.7	16.7	16.7	16.7	16.7	16.7	16.7	16.7	16.7	...	...	C95300	B148
18.7	...	...	...	...	...	...	...	...	...	...	...	...	C95600	B148
20.0	19.0	18.7	18.5	18.5	18.5	18.5	16.0	13.9	...	...	...	...	C95400	B148
21.3	21.3	21.3	21.3	21.3	21.3	...	...	...	...	...	...	...	C86700	B584
26.7	26.7	26.7	26.7	26.7	26.7	26.7	26.7	26.7	...	...	...	...	C95500	B148
30.0	30.0	30.0	30.0	30.0	30.0	...	...	...	...	...	...	...	C86200	B584
36.7	36.7	36.7	36.7	36.7	36.7	...	...	...	...	...	...	...	C86300	B584
														Rod
28.3	25.9	25.4	25.4	25.4	...	...	...	...	...	...	...	...	C69300	B371
23.3	20.2	19.8	19.8	19.8	...	...	...	...	...	...	...	...	C69300	B371
20.0	17.3	17.0	17.0	17.0	...	...	...	...	...	...	...	...	C69300	B371

Copyright © 2015 by the American Society of Mechanical Engineers.
No reproduction may be made of this material without written consent of ASME.

(14)

Table A-1 Basic Allowable Stresses in Tension for Metals (Cont'd)

Numbers in Parentheses Refer to Notes for Appendix A Tables; Specifications Are ASTM Unless Otherwise Indicated

Nominal Composition	Spec. No.	UNS No.	Class/Condition/ Temper	Size Range, in.	P-No. (5)	Notes	Min. Temp., °F (6)	Specified Min. Strength, ksi Tensile	Specified Min. Strength, ksi Yield	Min. Temp. to 100	200	300	400	500	600	650
Nickel and Nickel Alloy (4a) Pipes and Tubes (2)																
Low C–Ni	B161	N02201	Annealed	> 5 O.D.	41	. . .	−325	50	10	6.7	6.4	6.3	6.3	6.3	6.3	6.2
Low C–Ni	B725	N02201	Annealed	> 5 O.D.	41	. . .	−325	50	10	6.7	6.4	6.3	6.3	6.3	6.3	6.2
Ni	B161	N02200	Annealed	> 5 O.D.	41	. . .	−325	55	12	8.0	8.0	8.0	8.0	8.0	8.0	. . .
Ni	B725	N02200	Annealed	> 5 O.D.	41	. . .	−325	55	12	8.0	8.0	8.0	8.0	8.0	8.0	. . .
Low C–Ni	B161	N02201	Annealed	≤ 5 O.D.	41	. . .	−325	50	12	8.0	7.7	7.5	7.5	7.5	7.5	7.5
Low C–Ni	B725	N02201	Annealed	≤ 5 O.D.	41	. . .	−325	50	12	8.0	7.7	7.5	7.5	7.5	7.5	7.5
Ni	B161	N02200	Annealed	≤ 5 O.D.	41	. . .	−325	55	15	10.0	10.0	10.0	10.0	10.0	10.0	. . .
Ni	B725	N02200	Annealed	≤ 5 O.D.	41	. . .	−325	55	15	10.0	10.0	10.0	10.0	10.0	10.0	. . .
Ni–Cu	B165	N04400	Annealed	> 5 O.D.	42	. . .	−325	70	25	16.7	14.6	13.6	13.2	13.1	13.1	13.1
Ni–Cu	B725	N04400	Annealed	> 5 O.D.	42	. . .	−325	70	25	16.7	14.6	13.6	13.2	13.1	13.1	13.1
Ni–Fe–Cr	B407	N08800	H.F. or H.F. ann.	. . .	45	. . .	−325	65	25	16.7	*16.7*	*16.7*	*16.7*	*16.7*	*16.7*	*16.7*
Ni–Cr–Fe	B167	N06600	H.F. or H.F. ann.	> 5 O.D.	43	. . .	−325	75	25	16.7	*16.7*	*16.7*	*16.7*	*16.7*	*16.7*	*16.7*
Ni–Fe–Cr	B407	N08810	C.D. sol. ann. or H.F. ann.	. . .	45	(62)	−325	65	25	16.7	16.7	16.7	16.7	16.7	16.5	16.1
Ni–Fe–Cr	B514	N08810	Annealed	. . .	45	(62)	−325	65	25	16.7	16.7	16.7	16.7	16.7	16.5	16.1
Ni–Fe–Cr	B407	N08811	C.D. sol. ann. or H.F. ann.	. . .	45	(62)	−325	65	25	16.7	16.7	16.7	16.7	16.7	16.5	16.1
Ni–Cu	B165	N04400	Annealed	≤ 5 O.D.	42	. . .	−325	70	28	18.7	16.4	15.2	14.7	14.7	14.7	14.7
Ni–Cu	B725	N04400	Annealed	≤ 5 O.D.	42	. . .	−325	70	28	18.7	16.4	15.2	14.7	14.7	14.7	14.7
Ni–Fe–Cr–Mo	B619	N08320	Sol. ann.	. . .	45	. . .	−325	75	28	18.7	*18.7*	*18.7*	*18.7*	*18.7*	*18.6*	*18.2*
Ni–Fe–Cr–Mo	B622	N08320	Sol. ann.	. . .	45	. . .	−325	75	28	18.7	18.7	*18.7*	*18.7*	*18.7*	*18.6*	*18.2*
Low C–Ni	B161	N02201	Str. rel.	. . .	41	. . .	−325	60	30	20.0	20.0	19.8	19.8	19.7	19.0	. . .
Low C–Ni	B725	N02201	Str. rel.	. . .	41	. . .	−325	60	30	20.0	20.0	19.8	19.8	19.7	19.0	. . .
Ni–Fe–Cr	B514	N08800	Annealed	. . .	45	. . .	−325	75	30	20.0	*20.0*	*20.0*	*20.0*	*20.0*	*20.0*	*20.0*
Ni–Cr–Fe	B167	N06600	H.F. or H.F. ann.	≤ 5 O.D.	43	. . .	−325	80	30	20.0	*20.0*	*20.0*	*20.0*	*20.0*	*20.0*	*20.0*
Ni–Cr–Fe	B167	N06600	C.D. ann.	> 5 O.D.	43	. . .	−325	80	30	20.0	*20.0*	*20.0*	*20.0*	*20.0*	*20.0*	*20.0*
Ni–Fe–Cr	B407	N08800	C.D. ann.	. . .	45	(61)	−325	75	30	20.0	*20.0*	*20.0*	*20.0*	*20.0*	*20.0*	*20.0*
Ni–Fe–Cr–Mo	B668	N08028	Sol. ann.	. . .	45	. . .	−325	73	31	20.7	*20.7*	*20.7*	*20.7*	*20.7*	**19.5**	**18.9**
Ni	B161	N02200	Str. rel.	. . .	41	. . .	−325	65	40	21.7	21.7	21.6	21.6	21.4	20.6	. . .
Ni	B725	N02200	Str. rel.	. . .	41	. . .	−325	65	40	21.7	21.7	21.6	21.6	21.4	20.6	. . .
Cr–Ni–Fe–Mo–Cu–Cb	B464	N08020	Annealed	. . .	45	. . .	−325	80	35	23.3	*23.3*	*23.3*	*23.3*	*23.3*	*23.3*	23.3
Cr–Ni–Fe–Mo–Cu–Cb	B729	N08020	Annealed	. . .	45	. . .	−325	80	35	23.3	*23.3*	*23.3*	*23.3*	*23.3*	*23.3*	23.3
Ni–Cr–Fe–Mo–Cu	B423	N08825	C.D. ann.	. . .	45	. . .	−325	85	35	23.3	*23.3*	*23.3*	*23.3*	*23.3*	*23.3*	*23.3*
Ni–Cr–Fe–Mo–Cu	B705	N08825	. . .	. . .	45	. . .	−325	85	35	23.3	*23.3*	*23.3*	*23.3*	*23.3*	*23.3*	*23.3*
Ni–Cr–Fe–Mo–Cu	B619	N06007	Sol. ann.	. . .	45	. . .	−325	90	35	23.3	*23.3*	*23.3*	*23.3*	23.3	**22.7**	**22.4**
Ni–Cr–Fe–Mo–Cu	B622	N06007	Sol. ann.	. . .	45	. . .	−325	90	35	23.3	*23.3*	*23.3*	*23.3*	23.3	**22.7**	**22.4**
Ni–Cr–Fe–Mo–W	B619	N06030	Sol. ann.	. . .	45	. . .	−325	85	35	23.3	*23.3*	*23.3*	**23.2**	**22.1**	**21.3**	**20.9**
Ni–Cr–Fe–Mo–W	B622	N06030	Sol. ann.	. . .	45	. . .	−325	85	35	23.3	*23.3*	*23.3*	**23.2**	**22.1**	**21.3**	**20.9**
Ni–Cr–Fe–Mo–W	B626	N06030	Sol. ann.	. . .	45	. . .	−325	85	35	23.3	*23.3*	*23.3*	**23.2**	**22.1**	**21.3**	**20.9**
Ni–Cr–Fe	B167	N06600	C.D. ann.	≤ 5 O.D.	43	. . .	−325	80	35	23.3	*23.3*	*23.3*	**23.3**	23.3	*23.3*	*23.3*
Ni–Cr–Fe	B517	N06600	C.D. ann.	. . .	43	. . .	−325	80	35	23.3	*23.3*	*23.3*	**23.3**	23.3	*23.3*	*23.3*
Ni–Mo–Cr	B619	N06455	Sol. ann.	. . .	43	. . .	−325	100	40	26.7	*26.7*	*26.7*	**26.7**	26.7	*26.7*	*26.7*

Copyright © 2015 by the American Society of Mechanical Engineers.
No reproduction may be made of this material without written consent of ASME.

Table A-1 Basic Allowable Stresses in Tension for Metals (Cont'd) (14)

Numbers in Parentheses Refer to Notes for Appendix A Tables; Specifications Are ASTM Unless Otherwise Indicated

Basic Allowable Stress, *S*, ksi, at Metal Temperature, °F [Note (1)]																					
700	750	800	850	900	950	1,000	1,050	1,100	1,150	1,200	1,250	1,300	1,350	1,400	1,450	1,500	1,550	1,600	1,650	UNS No.	Spec. No.
																					Nickel and Nickel Alloy (4a) Pipes and Tubes (2)
6.2	6.1	6.0	5.8	4.5	3.7	3.0	2.4	2.0	1.5	1.2	...	...	...	...	...	...	...	...	...	N02201	B161
6.2	6.1	6.0	5.8	4.5	3.7	3.0	2.4	2.0	1.5	1.2	..	...	...	...	...	...	...	...	...	N02201	B725
...	...	...	...	...	...	...	...	...	...	...	...	...	...	...	...	...	...	...	...	N02200	B161
...	...	...	...	...	...	...	...	...	...	...	...	...	...	...	...	...	...	...	...	N02200	B725
7.4	7.3	7.2	5.8	4.5	3.7	3.0	2.4	2.0	1.5	1.2	...	...	...	...	...	...	...	...	...	N02201	B161
7.4	7.3	7.2	5.8	4.5	3.7	3.0	2.4	2.0	1.5	1.2	...	...	...	...	...	...	...	...	...	N02201	B725
...	...	...	...	...	...	...	...	...	...	...	...	...	...	...	...	...	...	...	...	N02200	B161
...	...	...	...	...	...	...	...	...	...	...	...	...	...	...	...	...	...	...	...	N02200	B725
13.0	12.9	12.7	11.0	8.0	...	...	...	...	...	...	...	...	...	...	...	...	...	...	...	N04400	B165
13.0	12.9	12.7	11.0	8.0	...	...	...	...	...	...	...	...	...	...	...	...	...	...	...	N04400	B725
16.7	*16.7*	*16.7*	*16.7*	*16.7*	*16.7*	*16.6*	*16.3*	*13.0*	9.8	6.6	4.2	2.0	1.6	1.1	1.0	0.8	...	...	...	N08800	B407
16.7	*16.7*	*16.7*	*16.7*	*16.0*	*10.6*	7.0	4.5	3.0	2.2	2.0	...	...	...	...	...	...	...	...	...	N06600	B167
15.7	15.3	*15.0*	*14.7*	*14.5*	*14.2*	*14.0*	*13.8*	*11.6*	9.3	7.4	5.9	4.7	3.8	3.0	2.4	1.9	1.4	1.1	0.86	N08810	B407
15.7	15.3	*15.0*	*14.7*	*14.5*	*14.2*	*14.0*	*13.8*	*11.6*	9.3	7.4	5.9	4.7	3.8	3.0	2.4	1.9	1.4	1.1	0.86	N08810	B514
15.7	15.3	*15.0*	*14.7*	*14.5*	*14.2*	*14.0*	*13.8*	12.9	10.4	8.3	6.7	5.4	4.3	3.4	2.7	2.2	1.6	1.2	0.91	N08811	B407
14.6	14.5	14.3	11.0	8.0	...	...	...	...	...	...	...	...	...	...	...	...	...	...	...	N04400	B165
14.6	14.5	14.3	11.0	8.0	...	...	...	...	...	...	...	...	...	...	...	...	...	...	...	N04400	B725
17.8	*17.5*	*17.2*	...	...	...	...	...	...	...	...	...	...	...	...	...	...	...	...	...	N08320	B619
17.8	*17.5*	*17.2*	...	...	...	...	...	...	...	...	...	...	...	...	...	...	...	...	...	N08320	B622
...	...	...	...	...	...	...	...	...	...	...	...	...	...	...	...	...	...	...	...	N02201	B161
...	...	...	...	...	...	...	...	...	...	...	...	...	...	...	...	...	...	...	...	N02201	B725
20.0	*20.0*	*20.0*	20.0	20.0	20.0	19.9	17.0	13.0	9.8	6.6	4.2	2.0	1.6	1.1	1.0	0.8	...	...	...	N08800	B514
20.0	*20.0*	*20.0*	*20.0*	*16.0*	10.6	7.0	4.5	3.0	2.2	2.0	...	...	...	...	...	...	...	...	...	N06600	B167
20.0	*20.0*	*20.0*	*20.0*	*16.0*	10.6	7.0	4.5	3.0	2.2	2.0	...	...	...	...	...	...	...	...	...	N06600	B167
20.0	20.0	*20.0*	*20.0*	*20.0*	*20.0*	*19.9*	*17.0*	13.0	9.8	6.6	4.2	2.0	1.6	1.1	1.0	0.8	...	...	...	N08800	B407
18.3	**17.7**	**17.2**	**16.7**	...	...	...	...	...	...	...	...	...	...	...	...	...	...	...	...	N08028	B668
...	...	...	...	...	...	...	...	...	...	...	...	...	...	...	...	...	...	...	...	N02200	B161
...	...	...	...	...	...	...	...	...	...	...	...	...	...	...	...	...	...	...	...	N02200	B725
23.3	23.2	*22.7*	...	...	...	...	...	...	...	...	...	...	...	...	...	...	...	...	...	N08020	B464
23.3	23.2	*22.7*	...	...	...	...	...	...	...	...	...	...	...	...	...	...	...	...	...	N08020	B729
23.3	*23.2*	*23.0*	22.9	22.8	22.6	22.3	...	...	...	...	...	...	...	...	...	...	...	...	...	N08825	B423
23.3	*23.2*	*23.0*	22.9	22.8	22.6	22.3	...	...	...	...	...	...	...	...	...	...	...	...	...	N08825	B705
22.2	**22.0**	**21.8**	*21.7*	*20.0*	*19.5*	*18.9*	...	...	...	...	...	...	...	...	...	...	...	...	...	N06007	B619
22.2	**22.0**	**21.8**	...	...	...	...	...	...	...	...	...	...	...	...	...	...	...	...	...	N06007	B622
20.5	**20.1**	**19.7**	...	...	...	...	...	...	...	...	...	...	...	...	...	...	...	...	...	N06030	B619
20.5	**20.1**	**19.7**	...	...	...	...	...	...	...	...	...	...	...	...	...	...	...	...	...	N06030	B622
20.5	**20.1**	**19.7**	...	...	...	...	...	...	...	...	...	...	...	...	...	...	...	...	...	N06030	B626
23.3	*23.3*	*23.3*	*23.3*	16.0	10.6	7.0	4.5	3.0	2.2	2.0	...	...	...	...	...	...	...	...	...	N06600	B167
23.3	*23.3*	*23.3*	*23.3*	16.0	10.6	7.0	4.5	3.0	2.2	2.0	...	...	...	...	...	...	...	...	...	N06600	B517
26.5	*26.2*	*25.8*	...	...	...	...	...	...	...	...	...	...	...	...	...	...	...	...	...	N06455	B619

Copyright © 2015 by the American Society of Mechanical Engineers.
No reproduction may be made of this material without written consent of ASME.

(14)

Table A-1 Basic Allowable Stresses in Tension for Metals (Cont'd)

Numbers in Parentheses Refer to Notes for Appendix A Tables; Specifications Are ASTM Unless Otherwise Indicated

Nominal Composition	Product Form	Spec. No.	Type/ Grade	UNS No.	Class/ Condition/ Temper	Size Range, in.	P-No. (5)	Notes	Min. Temp., °F (6)	Specified Min. Strength, ksi Tensile	Specified Min. Strength, ksi Yield	Min. Temp. to 100	200	300	400	500
Nickel and Nickel Alloy (4a) (Cont'd)																
Pipes and Tubes (2) (Cont'd)																
Ni–Cr–Mo–Fe	...	B619	...	N06002	Sol. ann.	...	43	...	−325	100	40	26.7	*26.7*	*26.7*	*26.7*	*25.5*
Ni–Cr–Mo–Fe	...	B622	...	N06002	Sol. ann.	...	43	...	−325	100	40	26.7	*26.7*	*26.7*	*26.7*	*25.5*
Low C-Ni-Fe-Cr-Mo-Cu	...	B619	...	N08031	Annealed	...	45	...	−325	94	40	26.7	*26.7*	**26.7**	**24.7**	**23.3**
Low C-Ni-Fe-Cr-Mo-Cu	...	B622	...	N08031	Annealed	...	45	...	−325	94	40	26.7	*26.7*	**26.7**	**24.7**	**23.3**
Ni–Mo–Cr	...	B622	...	N06455	Sol. ann.	...	43	...	−325	100	40	26.7	*26.7*	*26.7*	*26.7*	*26.7*
Ni–Mo–Cr	...	B619	...	N10276	Sol. ann.	...	43	...	−325	100	41	27.3	*27.3*	*27.3*	*27.3*	**26.9**
Ni–Mo–Cr	...	B622	...	N10276	Sol. ann.	...	43	...	−325	100	41	27.3	*27.3*	*27.3*	*27.3*	**26.9**
Ni–Mo–Cr	...	B626	...	N10276	Sol. ann.	...	43	...	−325	100	41	27.3	*27.3*	*27.3*	*27.3*	**26.9**
Ni–Cu	...	B165	...	N04400	Str. rel.	...	42	(54)	−325	85	55	28.3	28.3	28.3	28.3	28.3
Ni–Cu	...	B725	...	N04400	Str. rel.	...	42	(54)	−325	85	55	28.3	28.3	28.3	28.3	28.3
Fe–Ni–Cr–Mo–Cu–N	...	B675	...	N08367	Annealed	> 3/16	45	...	−325	95	45	30.0	*30.0*	*29.9*	*28.6*	**27.7**
Fe–Ni–Cr–Mo–Cu–N	...	B690	...	N08367	Annealed	> 3/16	45	...	−325	95	45	30.0	*30.0*	*29.9*	*28.6*	**27.7**
Fe–Ni–Cr–Mo–Cu–N	...	B804	...	N08367	Annealed	> 3/16	45	...	−325	95	45	30.0	*30.0*	*29.9*	*28.6*	**27.7**
Fe–Ni–Cr–Mo–Cu–N	...	B675	...	N08367	Annealed	≤ 3/16	45	...	−325	100	45	30.0	*30.0*	*30.0*	**29.6**	**27.7**
Fe–Ni–Cr–Mo–Cu–N	...	B690	...	N08367	Annealed	≤ 3/16	45	...	−325	100	45	30.0	*30.0*	*30.0*	**29.6**	**27.7**
Fe–Ni–Cr–Mo–Cu–N	...	B804	...	N08367	Annealed	≤ 3/16	45	...	−325	100	45	30.0	*30.0*	*29.9*	**28.6**	**27.7**
Ni–Cr–Mo	...	B619	...	N06022	Sol. ann.	...	43	...	−325	100	45	30.0	*30.0*	*30.0*	*30.0*	**29.0**
Ni–Cr–Mo	...	B622	...	N06022	Sol. ann.	...	43	...	−325	100	45	30.0	*30.0*	*30.0*	*30.0*	**29.0**
Ni–Cr–Mo	...	B619	...	N06035	Sol. ann.	...	43	...	−325	85	35	23.3	*23.3*	*23.3*	**22.2**	**20.6**
Ni–Cr–Mo	...	B622	...	N06035	Sol. ann.	...	43	...	−325	85	35	23.3	*23.3*	*23.3*	**22.2**	**20.6**
Ni–Cr–Mo	...	B626	...	N06035	Sol. ann.	...	43	...	−325	85	35	23.3	*23.3*	*23.3*	**22.2**	**20.6**
Low C–Ni–Cr–Mo	...	B619	...	N06059	Sol. ann.	...	43	...	−325	100	45	30.0	*30.0*	*30.0*	*30.0*	**29.7**
Low C–Ni–Cr–Mo	...	B622	...	N06059	Sol. ann.	...	43	...	−325	100	45	30.0	*30.0*	*30.0*	*30.0*	**29.7**
Low C–Ni–Cr–Mo	...	B626		N06059	Sol. ann.	All	43	...	−325	100	45	30.0	30.0	30.0	30.0	**29.7**
Low C–Ni–Cr–Mo	...	B619	...	N06200	Sol. ann.	All	43	...	−325	100	45	30.0	*30.0*	*30.0*	*30.0*	**28.6**
Low C–Ni–Cr–Mo	...	B622	...	N06200	Sol. ann.	All	43	...	−325	100	45	30.0	*30.0*	*30.0*	*30.0*	**28.6**
Low C–Ni–Cr–Mo	...	B626	...	N06200	Sol. ann.	All	43	...	−325	100	45	30.0	*30.0*	*30.0*	*30.0*	**28.6**
Ni–Mo–Cr	...	B619	...	N10362	Sol. ann.	All	43	...	−325	105	45	30.0	*30.0*	*30.0*	*30.0*	**28.9**
Ni–Mo–Cr	...	B622	...	N10362	Sol. ann.	All	43	...	−325	105	45	30.0	*30.0*	*30.0*	*30.0*	**28.9**
Ni–Mo–Cr	...	B626	...	N10362	Sol. ann.	All	43	...	−325	105	45	30.0	*30.0*	*30.0*	*30.0*	**28.9**
Ni–Mo	...	B619	...	N10001	Sol. ann.	...	44	...	−325	100	45	30.0	*30.0*	*30.0*	*30.0*	*30.0*
Ni–Mo	...	B622	...	N10001	Sol. ann.	...	44	...	−325	100	45	30.0	*30.0*	*30.0*	*30.0*	*30.0*
Ni–Mo	...	B619	...	N10665	Sol. ann.	...	44	...	−325	110	51	34.0	*34.0*	*34.0*	*34.0*	*34.0*
Ni–Mo	...	B622	...	N10665	Sol. ann.	...	44	...	−325	110	51	34.0	*34.0*	*34.0*	*34.0*	*34.0*
Ni–Mo	...	B619	...	N10675	Sol. ann.	...	44	...	−325	110	51	34.0	*34.0*	*34.0*	*34.0*	*34.0*
Ni–Mo	...	B622	...	N10675	Sol. ann.	...	44	...	−325	110	51	34.0	*34.0*	*34.0*	*34.0*	*34.0*
Ni–Mo	...	B626	...	N10675	Sol. ann.	...	44	...	−325	110	51	34.0	*34.0*	*34.0*	*34.0*	*34.0*
Ni–Cr–Mo–Cb	...	B444	...	N06625	Annealed	...	43	(64)(70)	−325	120	60	40.0	*40.0*	*39.6*	*39.2*	*38.6*
Ni–Cr–W–Mo	...	B619	...	N06230	Sol. ann.	...	43	...	−325	110	45	30.0	*30.0*	*30.0*	*30.0*	*30.0*
Ni–Cr–W–Mo	...	B622	...	N06230	Sol. ann.	...	43	...	−325	110	45	30.0	*30.0*	*30.0*	*30.0*	*30.0*
Ni–Cr–W–Mo	...	B626	...	N06230	Sol. ann.	...	43	...	−325	110	45	30.0	*30.0*	*30.0*	*30.0*	*30.0*
Plates and Sheets																
Low C–Ni	Plate	B162	...	N02201	H.R. ann.	...	41	...	−325	50	12	8.0	7.7	7.5	7.5	7.5
Low C–Ni	Plate	B162	...	N02201	H.R. as R.	...	41	...	−325	50	12	8.0	7.7	7.5	7.5	7.5
Ni	Plate	B162	...	N02200	H.R. ann.	...	41	...	−325	55	15	10.0	10.0	10.0	10.0	10.0
Ni	Plate	B162	...	N02200	H.R. as R.	...	41	...	−325	55	20	13.3	13.3	13.3	13.3	13.3
Ni–Fe–Cr	...	B409	...	N08810	Annealed	All	45	...	−325	65	25	16.7	16.7	16.7	16.7	16.7
Ni–Fe–Cr	...	B409	...	N08811	Annealed	All	45	...	−325	65	25	16.7	16.7	16.7	16.7	16.7

Copyright © 2015 by the American Society of Mechanical Engineers.
No reproduction may be made of this material without written consent of ASME.

Table A-1 Basic Allowable Stresses in Tension for Metals (Cont'd) (14)

Numbers in Parentheses Refer to Notes for Appendix A Tables; Specifications Are ASTM Unless Otherwise Indicated

Basic Allowable Stress, *S*, ksi, at Metal Temperature, °F [Note (1)]																								
600	650	700	750	800	850	900	950	1,000	1,050	1,100	1,150	1,200	1,250	1,300	1,350	1,400	1,450	1,500	1,550	1,600	1,650	UNS No. or Grade	Spec. No.
																						Nickel and Nickel Alloy (4a) (Cont'd)	
																						Pipes and Tubes (2) (Cont'd)	
24.2	*23.7*	*23.3*	*22.9*	*22.7*	*22.5*	*19.6*	*19.5*	*19.3*	*19.3*	*17.5*	14.1	11.3	9.3	7.7	6.1	4.8	3.8	3.0	...	...	...	N06002	B619
24.2	*23.7*	*23.3*	*22.9*	*22.7*	*22.5*	*19.6*	*19.5*	*19.3*	*19.3*	*17.5*	14.1	11.3	9.3	7.7	6.1	4.8	3.8	3.0	...	...	...	N06002	B622
22.2	**21.7**	**11.1**	**8.9**	**7.2**	...	...	...	...	...	...	...	...	...	...	...	...	...	...	...	...	...	N08031	B619
22.2	**21.7**	**11.1**	**8.9**	**7.2**	...	...	...	...	...	...	...	...	...	...	...	...	...	...	...	...	...	N08031	B622
26.7	*26.7*	**26.5**	**26.1**	**25.8**	...	...	...	...	...	...	...	...	...	...	...	...	...	...	...	...	...	N06455	B622
25.2	**24.6**	**24.0**	**23.5**	**23.1**	**22.8**	**22.6**	**22.4**	**22.3**	18.5	15.0	12.2	9.8	7.8	...	...	...	...	...	...	...	...	N10276	B619
25.2	**24.6**	**24.0**	**23.5**	**23.1**	**22.8**	**22.6**	**22.4**	**22.3**	18.5	15.0	12.2	9.8	7.8	...	...	...	...	...	...	...	...	N10276	B622
25.2	**24.6**	**24.0**	**23.5**	**23.1**	**22.8**	**22.6**	**22.4**	**22.3**	18.5	15.0	12.2	9.8	7.8	...	...	...	...	...	...	...	...	N10276	B626
...	...	...	...	...	...	...	...	...	...	...	...	...	...	...	...	...	...	...	...	...	...	N04400	B165
...	...	...	...	...	...	...	...	...	...	...	...	...	...	...	...	...	...	...	...	...	...	N04400	B725
26.2	**25.6**	**25.1**	**24.7**	**24.3**	**23.9**	**23.6**	...	...	...	...	...	...	...	...	...	...	...	...	...	...	...	N08367	B675
26.2	**25.6**	**25.1**	**24.7**	**24.3**	**23.9**	**23.6**	...	...	...	...	...	...	...	...	...	...	...	...	...	...	...	N08367	B690
26.2	**25.6**	**25.1**	**24.7**	**24.3**	**23.9**	**23.6**	...	...	...	...	...	...	...	...	...	...	...	...	...	...	...	N08367	B804
26.2	**25.6**	**25.1**	**24.7**	**24.3**	**23.9**	**23.6**	...	...	...	...	...	...	...	...	...	...	...	...	...	...	...	N08367	B675
26.2	**25.6**	**25.1**	**24.7**	**24.3**	**23.9**	**23.6**	...	...	...	...	...	...	...	...	...	...	...	...	...	...	...	N08367	B690
26.2	**25.6**	**25.1**	**24.7**	**24.3**	...	...	...	...	...	...	...	...	...	...	...	...	...	...	...	...	...	N08367	B804
27.6	**27.0**	**26.5**	**26.1**	**25.7**	...	...	...	...	...	...	...	...	...	...	...	...	...	...	...	...	...	N06022	B619
27.6	**27.0**	**26.5**	**26.1**	**25.7**	...	...	...	...	...	...	...	...	...	...	...	...	...	...	...	...	...	N06022	B622
19.7	**19.4**	**19.2**	**19.0**	**18.8**	...	...	...	...	...	...	...	...	...	...	...	...	...	...	...	...	...	N06035	B619
19.7	**19.4**	**19.2**	**19.0**	**18.8**	...	...	...	...	...	...	...	...	...	...	...	...	...	...	...	...	...	N06035	B622
19.7	**19.4**	**19.2**	**19.0**	**18.8**	...	...	...	...	...	...	...	...	...	...	...	...	...	...	...	...	...	N06035	B626
28.2	**27.5**	**26.8**	**26.1**	**25.5**	...	...	...	...	...	...	...	...	...	...	...	...	...	...	...	...	...	N06059	B619
28.2	**27.5**	**26.8**	**26.1**	**25.5**	...	...	...	...	...	...	...	...	...	...	...	...	...	...	...	...	...	N06059	B622
28.2	**27.5**	**26.8**	**26.1**	**25.5**	...	...	...	...	...	...	...	...	...	...	...	...	...	...	...	...	...	N06059	B626
26.9	**26.2**	**25.7**	**25.4**	25.2	...	...	...	...	...	...	...	...	...	...	...	...	...	...	...	...	...	N06200	B619
26.9	**26.2**	**25.7**	**25.4**	25.2	...	...	...	...	...	...	...	...	...	...	...	...	...	...	...	...	...	N06200	B622
26.9	**26.2**	**25.7**	**25.4**	25.2	...	...	...	...	...	...	...	...	...	...	...	...	...	...	...	...	...	N06200	B626
27.7	**27.3**	**27.0**	**26.7**	**26.4**	...	...	...	...	...	...	...	...	...	...	...	...	...	...	...	...	...	N10362	B619
27.7	**27.3**	**27.0**	**26.7**	**26.4**	...	...	...	...	...	...	...	...	...	...	...	...	...	...	...	...	...	N10362	B622
27.7	**27.3**	**27.0**	**26.7**	**26.4**	...	...	...	...	...	...	...	...	...	...	...	...	...	...	...	...	...	N10362	B626
30.0	*30.0*	*30.0*	**30.0**	**29.9**	...	...	...	...	...	...	...	...	...	...	...	...	...	...	...	...	...	N10001	B619
30.0	*30.0*	*30.0*	**30.0**	**29.9**	...	...	...	...	...	...	...	...	...	...	...	...	...	...	...	...	...	N10001	B622
34.0	*34.0*	*34.0*	*34.0*	*34.0*	...	...	...	...	...	...	...	...	...	...	...	...	...	...	...	...	...	N10665	B619
34.0	*34.0*	*34.0*	*34.0*	*34.0*	...	...	...	...	...	...	...	...	...	...	...	...	...	...	...	...	...	N10665	B622
34.0	*34.0*	*34.0*	**33.9**	**33.5**	...	...	...	...	...	...	...	...	...	...	...	...	...	...	...	...	...	N10675	B619
34.0	*34.0*	*34.0*	**33.9**	**33.5**	...	...	...	...	...	...	...	...	...	...	...	...	...	...	...	...	...	N10675	B622
34.0	*34.0*	*34.0*	**33.9**	**33.5**	...	...	...	...	...	...	...	...	...	...	...	...	...	...	...	...	...	N10675	B626
37.8	*37.4*	*37.0*	36.6	36.3	*36.1*	*35.8*	*35.4*	*31.2*	*31.2*	23.1	21.0	13.2	...	...	...	...	...	...	...	...	...	N06625	B444
29.6	**29.1**	**28.7**	**28.4**	**28.2**	**28.2**	**28.2**	**28.2**	**28.2**	**28.2**	23.2	19.0	15.6	12.9	10.6	8.5	6.7	5.3	4.1	2.9	2.1	1.5	N06230	B619
29.6	**29.1**	**28.7**	**28.4**	**28.2**	**28.2**	**28.2**	**28.2**	**28.2**	**28.2**	23.2	19.0	15.6	12.9	10.6	8.5	6.7	5.3	4.1	2.9	2.1	1.5	N06230	B622
29.6	**29.1**	**28.7**	**28.4**	**28.2**	**28.2**	**28.2**	**28.2**	**28.2**	**28.2**	23.2	19.0	15.6	12.9	10.6	8.5	6.7	5.3	4.1	2.9	2.1	1.5	N06230	B626
																						Plates and Sheets	
7.5	7.5	7.4	7.4	7.2	5.8	4.5	3.7	3.0	2.4	2.0	1.5	1.2	...	...	...	...	...	...	...	...	...	N02201	B162
7.5	7.5	7.4	7.4	7.2	5.8	4.5	3.7	3.0	2.4	2.0	1.5	1.2	...	...	...	...	...	...	...	...	...	N02201	B162
10.0	...	...	...	...	...	...	...	...	...	...	...	...	...	...	...	...	...	...	...	...	...	N02200	B162
13.3	...	...	...	...	...	...	...	...	...	...	...	...	...	...	...	...	...	...	...	...	...	N02200	B162
16.6	16.2	15.8	15.5	15.1	14.9	14.6	14.3	14.0	13.8	11.6	9.3	7.4	5.9	4.7	3.8	3.0	2.4	1.9	1.4	1.1	0.86	N08810	B409
16.5	16.1	15.7	15.3	15.0	14.7	14.5	14.2	14.0	13.7	12.9	10.4	8.3	6.7	5.4	4.3	3.4	2.7	2.2	1.6	1.2	0.91	N08811	B409

Copyright © 2015 by the American Society of Mechanical Engineers.
No reproduction may be made of this material without written consent of ASME.

(14)

Table A-1 Basic Allowable Stresses in Tension for Metals (Cont'd)

Numbers in Parentheses Refer to Notes for Appendix A Tables; Specifications Are ASTM Unless Otherwise Indicated

Nominal Composition	Product Form	Spec. No.	Type/ Grade	UNS No.	Class/ Condition/ Temper	Size Range, in.	P-No. (5)	Notes	Min. Temp., °F (6)	Specified Min. Strength, ksi Tensile	Specified Min. Strength, ksi Yield	Min. Temp. to 100	200	300	400	500
Nickel and Nickel Alloy (4a) (Cont'd)																
Plates and Sheets (Cont'd)																
Ni–Fe–Cr–Mo	. . .	B620	. . .	N08320	Sol. ann.	All	45	. . .	−325	75	28	18.7	*18.7*	*18.7*	*18.7*	*18.7*
Ni–Cu	Plate	B127	. . .	N04400	H.R. ann.	. . .	42	. . .	−325	70	28	18.7	16.4	*15.2*	14.7	14.7
Ni–Cr–Fe–Mo–Cu	. . .	B582	. . .	N06007	Sol. ann.	> 3/4	45	. . .	−325	85	30	20.0	*20.0*	*20.0*	*20.0*	*20.0*
Ni–Fe–Cr	. . .	B409	. . .	N08800	Annealed	All	45	. . .	−325	75	30	20.0	*20.0*	*20.0*	*20.0*	*20.0*
Ni–Fe–Cr–Mo	. . .	B709	. . .	N08028	Sol. ann.	. . .	45	. . .	−325	73	31	20.7	*20.7*	*20.7*	*20.7*	*20.7*
Ni–Cr–Fe–Mo–Cu	. . .	B424	. . .	N08825	Annealed	. . .	45	. . .	−325	85	35	23.3	*23.3*	*23.3*	*23.3*	*23.3*
Cr–Ni–Fe–Mo–Cu–Cb	. . .	B463	. . .	N08020	Annealed	All	45	. . .	−325	80	35	23.3	*23.3*	*23.3*	*23.3*	*23.3*
Ni–Cr–Fe–Mo–W	. . .	B582	. . .	N06030	Sol. ann.	All	45	. . .	−325	85	35	23.3	*23.3*	*23.3*	**23.2**	**22.1**
Ni–Cr–Fe–Mo–Cu	. . .	B582	. . .	N06007	Sol. ann.	≤ 3/4	45	. . .	−325	90	35	23.3	*23.3*	*23.3*	*23.3*	*23.3*
Ni–Cr–Fe–Mo	. . .	B435	. . .	N06002	H.R. sol. ann.	All	43	. . .	−325	95	35	23.3	23.3	23.3	23.3	22.3
Ni–Cr–Fe	Plate	B168	. . .	N06600	H.R. ann.	. . .	43	. . .	−325	80	35	23.3	*23.3*	*23.3*	*23.3*	*23.3*
Ni–Cr–Fe	Plate	B168	. . .	N06600	H.R. as R.	. . .	43	. . .	−325	85	35	23.3	*23.3*	*23.3*	*23.3*	*23.3*
Ni–Cu	Plate	B127	. . .	N04400	H.R. as R.	. . .	42	. . .	−325	75	40	25.0	25.0	24.7	23.9	23.4
Low C–Ni–Fe–Cr–Mo–Cu	. . .	B625	. . .	N08031	Annealed	All	45	. . .	−325	94	40	26.7	*26.7*	**26.7**	**24.7**	**23.3**
Low C–Ni–Mo–Cr	. . .	B575	. . .	N06455	Sol. ann.	All	43	. . .	−325	100	40	26.7	*26.7*	*26.7*	*26.7*	*26.7*
Low C–Ni–Mo–Cr	. . .	B575	. . .	N10276	Sol. ann.	All	43	. . .	−325	100	41	27.3	*27.3*	*27.3*	*27.3*	**26.9**
Ni–Cr–Mo–Cb	Plate	B443	. . .	N06625	Annealed	All	43	(64)(70)	−325	110	55	36.7	36.7	36.3	35.9	35.4
Ni–Cr–W–Mo	. . .	B435	. . .	N06230	Sol. ann.	All	43	. . .	−325	110	45	30.0	*30.0*	*30.0*	*30.0*	*30.0*
Ni–Cr–Mo–Cb	Sheet	B575	. . .	N06022	Sol. ann.	< 3/16	43	. . .	−325	100	45	30.0	*30.0*	*30.0*	*30.0*	**29.0**
Ni–Cr–Mo	. . .	B575	. . .	N06035	Sol. ann.	All	43	. . .	−325	85	35	23.3	*23.3*	*23.3*	**22.2**	**20.6**
Fe–Ni–Cr–Mo–Cu–N	. . .	B688	. . .	N08367	Annealed	> 3/16	45	. . .	−325	95	45	30.0	*30.0*	*29.9*	28.6	**27.7**
Fe–Ni–Cr–Mo–Cu–N	. . .	B688	. . .	N08367	Annealed	≤ 3/16	45	. . .	−325	100	45	30.0	*30.0*	*30.0*	**29.6**	**27.7**
Low C–Ni–Cr–Mo	. . .	B575	. . .	N06059	Sol. ann.	All	43	. . .	−325	100	45	30.0	*30.0*	*30.0*	*30.0*	29.6
Low C–Ni–Cr–Mo	. . .	B575	. . .	N06200	Sol. ann.	All	43	. . .	−325	100	45	30.0	*30.0*	*30.0*	*30.0*	**28.6**
Ni–Mo–Cr	. . .	B575	. . .	N10362	Sol. ann.	All	43	(9)	−325	105	45	30.0	*30.0*	*30.0*	*30.0*	**28.9**
Ni–Mo	Plate	B333	. . .	N10001	Sol. ann.	≥ 3/16, ≤ 2 1/2	44	. . .	−325	100	45	30.0	*30.0*	*30.0*	*30.0*	*30.0*
Ni–Mo	Sheet	B333	. . .	N10001	Sol. ann.	< 3/16	44	. . .	−325	115	50	33.3	*33.3*	*33.3*	*33.3*	*33.3*
Ni–Mo	. . .	B333	. . .	N10665	Sol. ann.	All	44	. . .	−325	110	51	34.0	*34.0*	*34.0*	*34.0*	*34.0*
Ni–Mo	. . .	B333	. . .	N10675	Sol. ann.	All	44	. . .	−325	110	51	34.0	*34.0*	*34.0*	*34.0*	*34.0*
Forgings and Fittings (2)																
Low C–Ni	. . .	B160	. . .	N02201	Annealed	All	41	(9)(9a)	−325	50	10	6.7	6.4	6.3	6.3	6.3
Low C–Ni	. . .	B366	. . .	N02201	Annealed	All	41	(32)(74)	−325	50	10	6.7	6.4	6.3	6.3	6.3
Ni	. . .	B366	. . .	N02200	Annealed	All	41	(32)(74)	−325	55	12	8.0	8.0	8.0	8.0	8.0
Ni	. . .	B564	. . .	N02200	. . .	. . .	41	(32)	−325	55	12	8.0	8.0	8.0	8.0	8.0

Copyright © 2015 by the American Society of Mechanical Engineers.
No reproduction may be made of this material without written consent of ASME.

Table A-1 Basic Allowable Stresses in Tension for Metals (Cont'd) (14)

Numbers in Parentheses Refer to Notes for Appendix A Tables; Specifications Are ASTM Unless Otherwise Indicated

Basic Allowable Stress, *S*, ksi, at Metal Temperature, °F [Note (1)]																							
600	650	700	750	800	850	900	950	1,000	1,050	1,100	1,150	1,200	1,250	1,300	1,350	1,400	1,450	1,500	1,550	1,600	1,650	UNS No. or Grade	Spec. No.
																						Nickel and Nickel Alloy (4a) (Cont'd)	
																						Plates and Sheets (Cont'd)	
18.6	*18.2*	*17.8*	**17.5**	**17.2**	...	...	...	...	...	...	...	...	...	...	...	...	...	...	...	...	...	N08320	B620
14.7	14.7	14.6	14.5	14.3	11.0	8.0	...	...	...	...	...	...	...	...	...	...	...	...	...	...	...	N04400	B127
19.5	**19.2**	**19.0**	**18.8**	**18.7**	*18.6*	*18.5*	*18.4*	*18.3*	...	...	...	...	...	...	...	...	...	...	...	...	...	N06007	B582
20.0	*20.0*	*20.0*	*20.0*	*20.0*	20.0	20.0	20.0	19.9	17.0	13.0	9.8	6.6	4.2	2.0	1.6	1.1	1.0	0.8	...	...	...	N08800	B409
19.5	**18.9**	**18.3**	**17.7**	**17.2**	**16.7**	...	...	...	...	...	...	...	...	...	...	...	...	...	...	...	...	N08028	B709
23.3	*23.3*	*23.3*	*23.2*	*23.0*	22.9	22.8	22.6	22.3	...	...	...	...	...	...	...	...	...	...	...	...	...	N08825	B424
23.3	*23.3*	*23.3*	*23.2*	22.7	...	...	...	...	...	...	...	...	...	...	...	...	...	...	...	...	...	N08020	B463
21.3	**20.9**	**20.5**	**20.1**	**19.7**	...	...	...	...	...	...	...	...	...	...	...	...	...	...	...	...	...	N06030	B582
22.7	*22.4*	*22.2*	*22.0*	*21.8*	*21.7*	*20.0*	*19.5*	*18.9*	...	...	...	...	...	...	...	...	...	...	...	...	...	N06007	B582
21.2	20.7	20.3	20.1	19.9	...	...	...	...	...	...	...	...	...	...	...	...	...	...	...	...	...	N06002	B435
23.3	*23.3*	*23.3*	*23.3*	*23.3*	*23.3*	16.0	10.6	7.0	4.5	3.0	2.2	2.0	...	...	...	...	...	...	...	...	...	N06600	B168
23.3	*23.3*	*23.3*	*23.3*	*23.3*	*23.3*	*16.0*	*10.6*	7.0	4.5	3.0	2.2	2.0	...	...	...	...	...	...	...	...	...	N06600	B168
23.1	22.9	22.7	20.0	14.5	8.5	4.0	...	...	...	...	...	...	...	...	...	...	...	...	...	...	...	N04400	B127
22.2	**21.7**	**21.3**	**20.9**	**20.5**	...	...	...	...	...	...	...	...	...	...	...	...	...	...	...	...	...	N08031	B625
26.7	*26.7*	**26.5**	**26.1**	**25.8**	...	...	...	...	...	...	...	...	...	...	...	...	...	...	...	...	...	N06455	B575
25.2	**24.6**	**24.0**	**23.5**	**23.1**	**22.8**	**22.6**	**22.4**	**22.3**	18.5	15.0	12.2	9.8	7.8	...	...	...	...	...	...	...	...	N10276	B575
34.7	34.3	33.9	33.6	33.3	33.1	32.8	32.5	31.2	31.2	23.1	21.0	13.2	...	...	...	...	...	...	...	...	...	N06625	B443
29.6	**29.1**	**28.7**	**28.4**	**28.2**	**28.2**	**28.2**	**28.2**	**28.2**	**28.2**	23.2	19.0	15.6	12.9	10.6	8.5	6.7	5.3	4.1	2.9	2.1	1.5	N06230	B435
27.6	**27.0**	**26.5**	**26.1**	**25.7**	...	...	...	...	...	...	...	...	...	...	...	...	...	...	...	...	...	N06022	B575
19.7	**19.4**	**19.2**	**19.0**	**18.8**	...	...	...	...	...	...	...	...	...	...	...	...	...	...	...	...	...	N06035	B575
26.2	**25.6**	**25.1**	**24.7**	**24.3**	**23.9**	**23.6**	...	...	...	...	...	...	...	...	...	...	...	...	...	...	...	N08367	B688
26.2	**25.6**	**25.1**	**24.7**	**24.3**	**23.9**	**23.6**	...	...	...	...	...	...	...	...	...	...	...	...	...	...	...	N08367	B688
28.1	27.5	**26.7**	**26.1**	**25.6**	...	...	...	...	...	...	...	...	...	...	...	...	...	...	...	...	...	N06059	B575
26.9	**26.2**	**25.7**	**25.4**	**25.2**	...	...	...	...	...	...	...	...	...	...	...	...	...	...	...	...	...	N06200	B575
27.7	**27.3**	**27.0**	**26.7**	**26.4**	...	...	...	...	...	...	...	...	...	...	...	...	...	...	...	...	...	N10362	B575
30.0	*30.0*	*30.0*	*30.0*	**29.8**	...	...	...	...	...	...	...	...	...	...	...	...	...	...	...	...	...	N10001	B333
33.3	*33.3*	*33.3*	*33.3*	**33.2**	...	...	...	...	...	...	...	...	...	...	...	...	...	...	...	...	...	N10001	B333
34.0	*34.0*	*34.0*	34.0	34.0	...	...	...	...	...	...	...	...	...	...	...	...	...	...	...	...	...	N10665	B333
34.0	*34.0*	*34.0*	**33.9**	**33.5**	...	...	...	...	...	...	...	...	...	...	...	...	...	...	...	...	...	N10675	B333
																						Forgings and Fittings (2)	
6.3	6.2	6.2	6.1	6.0	5.8	4.5	3.7	3.0	2.4	2.0	1.5	1.2	...	...	...	...	...	...	...	...	...	N02201	B160
6.3	6.2	6.2	6.1	6.0	5.8	4.5	3.7	3.0	2.4	2.0	1.5	1.2	...	...	...	...	...	...	...	...	...	N02201	B366
8.0	...	...	...	...	...	...	...	...	...	...	...	...	...	...	...	...	...	...	...	...	...	N02200	B366
8.0	...	...	...	...	...	...	...	...	...	...	...	...	...	...	...	...	...	...	...	...	...	N02200	B564

Copyright © 2015 by the American Society of Mechanical Engineers.
No reproduction may be made of this material without written consent of ASME.

(14)

Table A-1 Basic Allowable Stresses in Tension for Metals (Cont'd)

Numbers in Parentheses Refer to Notes for Appendix A Tables; Specifications Are ASTM Unless Otherwise Indicated

Nominal Composition	Product Form	Spec. No.	Type/ Grade	UNS No.	Class/ Condition/ Temper	Size Range, in.	P-No. (5)	Notes	Min. Temp., °F (6)	Specified Min. Strength, ksi Tensile	Specified Min. Strength, ksi Yield	Min. Temp. to 100	200	300	400	500
Nickel and Nickel Alloy (4a) (Cont'd)																
Forgings and Fittings (2) (Cont'd)																
Ni	...	B564	...	N02200	Annealed	All	41	(9)	−325	55	15	10.0	10.0	10.0	10.0	10.0
Ni–Fe–Cr	...	B564	...	N08810	Annealed	...	45	(9)	−325	65	25	16.7	16.7	16.7	16.7	16.7
Ni–Fe–Cr	...	B564	...	N08811	Annealed	...	45	(9)	−325	65	25	16.7	16.7	16.7	16.7	16.7
Ni–Fe–Cr	...	B366	...	N08810	Annealed	All	45	(9)(74)	−325	65	25	16.7	16.7	16.7	16.7	16.7
Ni–Fe–Cr	...	B366	...	N08811	Annealed	All	45	(9)(74)	−325	65	25	16.7	16.7	16.7	16.7	16.7
Ni–Cu	...	B564	...	N04400	Annealed	...	42	(9)	−325	70	25	16.7	14.6	13.6	13.2	13.1
Ni–Cu	...	B366	...	N04400	Annealed	All	42	(32)(74)	−325	70	25	16.7	14.6	13.6	13.2	13.1
Ni–Cr–Fe	...	B366	...	N06600	Annealed	All	43	(32)(74)	−325	75	25	16.7	*16.7*	*16.7*	*16.7*	*16.7*
Ni–Cr–Fe–Mo–W	...	B366	...	N06030	Sol. ann.	All	45	(74)	−325	85	35	23.3	*23.3*	*23.3*	**23.2**	**22.1**
Ni–Cr–Fe–Mo–W	...	B462	...	N06030	Sol. ann.	All	45	...	−325	85	35	23.3	*23.3*	*23.3*	**23.2**	**22.1**
Ni–Fe–Cr	...	B366	...	N08800	C.D. ann.	All	45	(74)	−325	75	30	20.0	*20.0*	*20.0*	*20.0*	*20.0*
Ni–Fe–Cr	...	B564	...	N08800	Annealed	...	45	(9)	−325	75	30	20.0	*20.0*	*20.0*	*20.0*	*20.0*
Cr–Ni–Fe–Mo–Cu–Cb	...	B366	...	N08020	Annealed	All	45	(74)	−325	80	35	23.3	*23.3*	*23.3*	*23.3*	23.3
Cr–Ni–Fe–Mo–Cu–Cb	...	B462	...	N08020	Annealed	...	45	(9)	−325	80	35	23.3	*23.3*	*23.3*	*23.3*	23.3
Ni–Cr–Fe	...	B564	...	N06600	Annealed	All	43	(9)	−325	80	35	23.3	*23.3*	*23.3*	*23.3*	*23.3*
Cr–Ni–Fe–Mo–Cu	...	B366	...	N08825	C.D. ann.	All	45	(74)	−325	85	35	23.3	*23.3*	*23.3*	*23.3*	*23.3*
Cr–Ni–Fe–Mo–Cu	...	B564	...	N08825	Annealed	...	45	...	−325	85	35	23.3	*23.3*	*23.3*	*23.3*	*23.3*
Ni–Cr–Mo–Fe	...	B366	...	N06002	Sol. ann.	All	43	(32)	−325	100	40	26.7	*26.7*	*26.7*	*26.7*	*25.5*
Low C–Ni–Fe–Cr–Mo–Cu	...	B366	...	N08031	Sol. ann.	All	45	(74)	−325	94	40	26.7	*26.7*	**26.7**	**24.7**	**23.3**
Low C–Ni–Fe–Cr–Mo–Cu	...	B564	...	N08031	Annealed H.W.	All	45	...	−325	94	40	26.7	*26.7*	**26.7**	**24.7**	**23.3**
Ni–Mo–Cr	...	B366	...	N10276	Sol. ann.	All	43	(74)	−325	100	41	27.3	*27.3*	*27.3*	*27.3*	**26.9**
Ni–Mo–Cr	...	B564	...	N10276	Sol. ann.	All	43	(9)	−325	100	41	27.3	*27.3*	*27.3*	*27.3*	**26.9**
Ni–Mo	...	B366	...	N10001	Sol. ann.	All	44	(32)	−325	100	45	30.0	*30.0*	*30.0*	*30.0*	*30.0*
Ni–Mo–Cr	...	B366	...	N06022	Sol. ann.	All	43	(32)(74)	−325	100	45	30.0	*30.0*	*30.0*	*30.0*	**29.0**
Ni–Cr–Mo	...	B564	...	N06022	...	...	43	...	−325	100	45	30.0	*30.0*	*30.0*	*30.0*	**29.0**
Ni–Cr–Mo	...	B366	...	N06035	Sol. ann.	All	43	(32)(74)	−325	85	35	23.3	*23.3*	*23.3*	**22.2**	**20.6**
Ni–Cr–Mo	...	B462	...	N06035	Sol. ann.	All	43	(9)	−325	85	35	23.3	*23.3*	*23.3*	**22.2**	**20.6**
Ni–Cr–Mo	...	B564	...	N06035	Sol. ann.	All	43	(9)	−325	85	35	23.3	*23.3*	*23.3*	**22.2**	**20.6**
Low C–Ni–Cr–Mo	...	B366	...	N06059	Sol. ann.	All	43	(74)	−325	100	45	30.0	*30.0*	*30.0*	*30.0*	**29.7**
Low C–Ni–Cr–Mo	...	B564	...	N06059	H.W. sol. ann.	All	43	...	−325	100	45	30.0	*30.0*	*30.0*	*30.0*	**29.7**
Low C–Ni–Cr–Mo	...	B366	...	N06200	Sol. ann.	All	43	(74)	−325	100	45	30.0	*30.0*	*30.0*	*30.0*	**28.6**
Low C–Ni–Cr–Mo	...	B462	...	N06200	Sol. ann.	All	43	...	−325	100	45	30.0	*30.0*	*30.0*	*30.0*	**28.6**
Low C–Ni–Cr–Mo	...	B564	...	N06200	Sol. ann.	All	43	...	−325	100	45	30.0	*30.0*	*30.0*	*30.0*	**28.6**
Ni–Mo–Cr	...	B366	...	N10362	Sol. ann.	All	43	(9)	−325	105	45	30.0	*30.0*	*30.0*	*30.0*	**28.9**
Ni–Mo–Cr	...	B462	...	N10362	Sol. ann.	All	43	(9)	−325	105	45	30.0	*30.0*	*30.0*	*30.0*	**28.9**
Ni–Mo–Cr	...	B564	...	N10362	Sol. ann.	All	43	(9)	−325	105	45	30.0	*30.0*	*30.0*	*30.0*	**28.9**
Ni–Cr–Mo–Cb	...	B564	...	N06625	Annealed	≤ 4	43	(9)(64)	−325	120	60	40.0	*40.0*	*39.6*	*39.2*	**38.6**
Ni–Mo	...	B366	...	N10665	Sol. ann.	All	44	(74)	−325	110	51	34.0	*34.0*	*34.0*	*34.0*	*34.0*
Ni–Mo	...	B366	...	N10675	Sol. ann.	All	44	(74)	−325	110	51	34.0	*34.0*	*34.0*	*34.0*	*34.0*
Ni–Mo	...	B462	...	N10675	Sol. ann.	All	44	...	−325	110	51	34.0	*34.0*	*34.0*	*34.0*	*34.0*
Ni–Mo	...	B564	...	N10675	Sol. ann.	All	44	...	−325	110	51	34.0	*34.0*	*34.0*	*34.0*	*34.0*
Ni–Cr–W–Mo	...	B564	...	N06230	Sol. ann.	All	43	...	−325	110	45	30.0	*30.0*	*30.0*	*30.0*	*30.0*
Ni–Cr–W–Mo	...	B366	...	N06230	Sol. ann.	All	43	(74)	−325	110	45	30.0	*30.0*	*30.0*	*30.0*	*30.0*

Copyright © 2015 by the American Society of Mechanical Engineers.
No reproduction may be made of this material without written consent of ASME.

Table A-1 Basic Allowable Stresses in Tension for Metals (Cont'd) (14)

Numbers in Parentheses Refer to Notes for Appendix A Tables; Specifications Are ASTM Unless Otherwise Indicated

Basic Allowable Stress, *S*, ksi, at Metal Temperature, °F [Note (1)]																							
600	650	700	750	800	850	900	950	1,000	1,050	1,100	1,150	1,200	1,250	1,300	1,350	1,400	1,450	1,500	1,550	1,600	1,650	UNS No. or Grade	Spec. No.
																						Nickel and Nickel Alloy (4a) (Cont'd) Forgings and Fittings (2) (Cont'd)	
10.0	...	...	...	...	...	...	...	...	...	...	...	...	...	...	...	...	...	...	...	...	...	N02200	B564
16.5	16.1	15.7	15.3	15.0	14.7	14.5	14.2	14.0	13.8	11.6	9.3	7.4	5.9	4.7	3.8	3.0	2.4	1.9	1.4	1.1	0.86	N08810	B564
16.5	16.1	15.7	15.3	15.0	14.7	14.5	14.2	14.0	13.8	12.9	10.4	8.3	6.7	5.4	4.3	3.4	2.7	2.2	1.6	1.2	0.91	N08811	B564
16.5	16.1	15.7	15.3	15.0	14.7	14.5	14.2	14.0	13.8	11.6	9.3	7.4	5.9	4.7	3.8	3.0	2.4	1.9	1.4	1.1	0.86	N08810	B366
16.5	16.1	15.7	15.3	15.0	14.7	14.5	14.2	14.0	13.8	12.9	10.4	8.3	6.7	5.4	4.3	3.4	2.7	2.2	1.6	1.2	0.91	N08811	B366
13.1	13.1	13.0	12.9	12.7	11.0	8.0	...	...	...	...	...	...	...	...	...	...	...	...	...	...	...	N04400	B564
13.1	13.1	13.0	12.9	12.7	11.0	8.0	...	...	...	...	...	...	...	...	...	...	...	...	...	...	...	N04400	B366
16.7	*16.7*	*16.7*	*16.7*	*16.7*	*16.5*	*15.9*	10.6	7.0	4.5	3.0	2.2	2.0	...	...	...	...	...	...	...	...	...	N06600	B366
21.3	**20.9**	**20.5**	**20.1**	**19.7**	...	...	...	...	...	...	...	...	...	...	...	...	...	...	...	...	...	N06030	B366
21.3	**20.9**	**20.5**	**20.1**	**19.7**	...	...	...	...	...	...	...	...	...	...	...	...	...	...	...	...	...	N06030	B462
20.0	*20.0*	*20.0*	*20.0*	*20.0*	20.0	20.0	20.0	19.9	17.0	13.0	9.8	6.6	4.2	2.0	1.6	1.1	1.0	0.8	...	...	...	N08800	B366
20.0	*20.0*	*20.0*	*20.0*	*20.0*	20.0	20.0	20.0	19.9	17.0	13.0	9.8	6.6	4.2	2.0	1.6	1.1	1.0	0.8	...	...	...	N08800	B564
23.3	*23.3*	23.3	23.2	22.7	...	...	...	...	...	...	...	...	...	...	...	...	...	...	...	...	...	N08020	B366
23.3	*23.3*	23.3	23.2	22.7	...	...	...	...	...	...	...	...	...	...	...	...	...	...	...	...	...	N08020	B462
23.3	*23.3*	*23.3*	*23.3*	*23.3*	23.3	16.0	10.6	7.0	4.5	3.0	2.2	2.0	...	...	...	...	...	...	...	...	...	N06600	B564
23.3	*23.3*	*23.3*	*23.2*	*23.0*	22.9	22.8	22.6	22.3	...	...	...	...	...	...	...	...	...	...	...	...	...	N08825	B366
23.3	*23.3*	*23.3*	*23.2*	*23.0*	22.9	22.8	22.6	22.3	...	...	...	...	...	...	...	...	...	...	...	...	...	N08825	B564
24.2	*23.7*	*23.3*	*22.9*	*22.7*	*22.5*	*19.6*	*19.5*	*19.3*	*19.3*	*17.5*	14.1	11.3	9.3	7.7	6.1	4.8	3.8	3.0	...	...	...	N06002	B366
22.2	**21.7**	**21.3**	**20.9**	**20.5**	...	...	...	...	...	...	...	...	...	...	...	...	...	...	...	...	...	N08031	B366
22.2	**21.7**	**21.3**	**20.9**	**20.5**	...	...	...	...	...	...	...	...	...	...	...	...	...	...	...	...	...	N08031	B564
25.2	**24.6**	**24.0**	**23.5**	**23.1**	**22.8**	**22.6**	**22.4**	**22.3**	18.5	15.0	12.2	9.8	7.8	...	...	...	...	...	...	...	...	N10276	B366
25.2	**24.6**	**24.0**	**23.5**	**23.1**	**22.8**	**22.6**	**22.4**	**22.3**	18.5	15.0	12.2	9.8	7.8	...	...	...	...	...	...	...	...	N10276	B564
30.0	*30.0*	*30.0*	*30.0*	*29.9*	...	...	...	...	...	...	...	...	...	...	...	...	...	...	...	...	...	N10001	B366
27.6	**27.0**	**26.5**	**26.1**	**25.7**	...	...	...	...	...	...	...	...	...	...	...	...	...	...	...	...	...	N06022	B366
27.6	**27.0**	**26.5**	**26.1**	**25.7**	...	...	...	...	...	...	...	...	...	...	...	...	...	...	...	...	...	N06022	B564
19.7	**19.4**	**19.2**	**19.0**	**18.8**	...	...	...	...	...	...	...	...	...	...	...	...	...	...	...	...	...	N06035	B366
19.7	**19.4**	**19.2**	**19.0**	**18.8**	...	...	...	...	...	...	...	...	...	...	...	...	...	...	...	...	...	N06035	B462
19.7	**19.4**	**19.2**	**19.0**	**18.8**	...	...	...	...	...	...	...	...	...	...	...	...	...	...	...	...	...	N06035	B564
28.2	**27.5**	**26.8**	**26.1**	**25.5**	...	...	...	...	...	...	...	...	...	...	...	...	...	...	...	...	...	N06059	B366
28.2	**27.5**	**26.8**	**26.1**	**25.5**	...	...	...	...	...	...	...	...	...	...	...	...	...	...	...	...	...	N06059	B564
26.9	**26.2**	**25.7**	**25.4**	**25.2**	...	...	...	...	...	...	...	...	...	...	...	...	...	...	...	...	...	N06200	B366
26.9	**26.2**	**25.7**	**25.4**	**25.2**	...	...	...	...	...	...	...	...	...	...	...	...	...	...	...	...	...	N06200	B462
26.9	**26.2**	**25.7**	**25.4**	**25.2**	...	...	...	...	...	...	...	...	...	...	...	...	...	...	...	...	...	N06200	B564
27.7	**27.3**	**27.0**	**26.7**	**26.4**	...	...	...	...	...	...	...	...	...	...	...	...	...	...	...	...	...	N10362	B366
27.7	**27.3**	**27.0**	**26.7**	**26.4**	...	...	...	...	...	...	...	...	...	...	...	...	...	...	...	...	...	N10362	B462
27.7	**27.3**	**27.0**	**26.7**	**26.4**	...	...	...	...	...	...	...	...	...	...	...	...	...	...	...	...	...	N10362	B564
37.8	**37.4**	37.0	36.6	36.3	36.1	35.8	35.4	31.2	31.2	23.1	21.0	13.2	...	...	...	...	...	...	...	...	...	N06625	B564
34.0	*34.0*	*34.0*	*34.0*	*34.0*	...	...	...	...	...	...	...	...	...	...	...	...	...	...	...	...	...	N10665	B366
34.0	*34.0*	*34.0*	**33.9**	**33.5**	...	...	...	...	...	...	...	...	...	...	...	...	...	...	...	...	...	N10675	B366
34.0	*34.0*	*34.0*	**33.9**	**33.5**	...	...	...	...	...	...	...	...	...	...	...	...	...	...	...	...	...	N10675	B462
34.0	*34.0*	*34.0*	**33.9**	**33.5**	...	...	...	...	...	...	...	...	...	...	...	...	...	...	...	...	...	N10675	B564
29.6	**29.1**	**28.7**	**28.4**	**28.2**	**28.2**	**28.2**	**28.2**	**28.2**	**28.2**	23.2	19.0	15.6	12.9	10.6	8.5	6.7	5.3	4.1	2.9	2.1	1.5	N06230	B564
29.6	**29.1**	**28.7**	**28.4**	**28.2**	**28.2**	**28.2**	**28.2**	**28.2**	**28.2**	23.2	19.0	15.6	12.9	10.6	8.5	6.7	5.3	4.1	2.9	2.1	1.5	N06230	B366

Copyright © 2015 by the American Society of Mechanical Engineers.
No reproduction may be made of this material without written consent of ASME.

(14)

Table A-1 Basic Allowable Stresses in Tension for Metals (Cont'd)

Numbers in Parentheses Refer to Notes for Appendix A Tables; Specifications Are ASTM Unless Otherwise Indicated

Nominal Composition	Product Form	Spec. No.	Type/ Grade	UNS No.	Class/ Condition/ Temper	Size Range, in.	P-No. (5)	Notes	Min. Temp., °F (6)	Specified Min. Strength, ksi Tensile	Specified Min. Strength, ksi Yield	Min. Temp. to 100	200	300	400	500
Nickel and Nickel Alloy (4a) (Cont'd)																
Rod and Bar																
Ni	...	B160	...	N02200	H.W.	All	41	(9)	−325	60	15	10.0	10.0	10.0	10.0	10.0
Ni	...	B160	...	N02200	Annealed	All	41	(9)	−325	55	15	10.0	10.0	10.0	10.0	10.0
Ni–Cu	...	B164	...	N04400	Ann. forg.	All	42	(13)	−325	70	25	16.7	14.6	13.6	13.2	13.1
Ni–Fe–Cr	Bar	B408	...	N08810	Sol. tr. or ann.	...	45	...	−325	65	25	16.7	16.7	16.7	16.7	16.7
Ni–Fe–Cr	Bar	B408	...	N08811	Sol. tr. or ann.	...	45	...	−325	65	25	16.7	16.7	16.7	16.7	16.7
Ni–Fe–Cr	Bar	B408	...	N08800	H.F.	...	45	...	−325	75	30	20.0	20.0	20.0	20.0	20.0
Ni–Fe–Cr–Mo	...	B621	...	N08320	Sol. ann.	All	45	...	−325	75	28	18.7	*18.7*	*18.7*	*18.7*	*18.7*
Ni–Cr–Fe–Mo–Cu	...	B581	...	N06007	Sol. ann.	> 3/4	45	...	−325	85	30	20.0	*20.0*	*20.0*	*20.0*	*20.0*
Ni–Fe–Cr–Mo–Cu	...	B425	...	N08825	Annealed	...	45	...	−325	85	35	23.3	*23.3*	*23.3*	*23.3*	*23.3*
Ni–Cr–Fe–Mo–Cu	...	B581	...	N06007	Sol. ann.	≤ 3/4	45	...	−325	90	35	23.3	*23.3*	*23.3*	*23.3*	*23.3*
Ni–Cr–Fe–Mo–W	...	B581	...	N06030	Sol. ann.	All	45	...	−325	85	35	23.3	*23.3*	*23.3*	**23.2**	**22.1**
Low C–Ni–Fe–Cr–Mo–Cu	...	B649	...	N08031	Annealed	All	45	...	−325	94	40	26.7	*26.7*	*26.7*	*24.7*	**23.3**
Ni–Cu	...	B164	...	N04400	H.W.	All except hex. > 2 1/8	42	...	−325	80	40	26.7	25.8	24.8	23.9	23.4
Ni–Cr–Mo	...	B574	...	N06035	Sol. ann.	All	43	(9)	−325	85	35	23.3	*23.3*	*23.3*	**22.2**	**20.6**
Ni–Mo–Cr	...	B574	...	N06455	Sol. ann.	All	43	(9)	−325	100	40	26.7	*26.7*	*26.7*	*26.7*	*26.7*
Ni–Mo–Cr	...	B574	...	N10276	Sol. ann.	All	43	...	−325	100	41	27.3	*27.3*	*27.3*	*27.3*	**26.9**
Ni–Mo–Cr	...	B574	...	N10362	Sol. ann.	All	43	(9)	−325	105	45	30.0	*30.0*	*30.0*	*30.0*	**28.9**
Ni–Cr–Mo–Cb	...	B446	...	N06625	Annealed	> 4 to 10	43	(9)(64) (70)	−325	110	50	33.3	*33.3*	*33.3*	*33.3*	33.3
Ni–Cr–Mo–Cb	...	B446	...	N06625	Annealed	≤ 4	43	(9)(64) (70)	−325	120	60	40.0	*40.0*	*40.0*	*40.0*	**38.3**
Ni–Cr–W–Mo	...	B572	...	N06230	Sol. ann.	All	43	...	−325	110	45	30.0	*30.0*	*30.0*	*30.0*	*30.0*
Low C–Ni–Cr–Mo	...	B574	...	N06059	Sol. ann.	All	43	...	−325	100	45	30.0	*30.0*	*30.0*	*30.0*	**29.7**
Low C–Ni–Cr–Mo	...	B574	...	N06200	Sol. ann.	All	43	...	−325	100	45	30.0	*30.0*	*30.0*	*30.0*	**28.6**
Ni–Mo	...	B335	...	N10675	Sol. ann.	All	44	...	−325	110	51	34.0	*34.0*	*34.0*	*34.0*	*34.0*
Castings (2)																
Ni–Mo–Cr	...	A494	CW-12MW	...	...	...	...	(9)(46)	−325	72	40	24.0	24.0	24.0	24.0	24.0
Ni–Mo–Cr	...	A494	CW-6M	...	...	...	...	(9)	−325	72	40	24.0	24.0	24.0	24.0	24.0
Ni–Cr–Mo	...	A494	CX-2MW	...	Sol. ann.	...	43	(9)	−325	80	45	26.7	26.7	26.7	26.7	26.7

Copyright © 2015 by the American Society of Mechanical Engineers.
No reproduction may be made of this material without written consent of ASME.

Table A-1 Basic Allowable Stresses in Tension for Metals (Cont'd) (14)

Numbers in Parentheses Refer to Notes for Appendix A Tables; Specifications Are ASTM Unless Otherwise Indicated

Basic Allowable Stress, *S*, ksi, at Metal Temperature, °F [Note (1)]																							
600	650	700	750	800	850	900	950	1,000	1,050	1,100	1,150	1,200	1,250	1,300	1,350	1,400	1,450	1,500	1,550	1,600	1,650	UNS No. or Grade	Spec. No.
																						Nickel and Nickel Alloy (4a) (Cont'd)	
																						Rod and Bar	
10.0	...	...	...	...	...	...	...	...	...	...	...	...	...	...	...	...	...	...	...	...	...	N02200	B160
10.0	...	...	...	...	...	...	...	...	...	...	...	...	...	...	...	...	...	...	...	...	...	N02200	B160
13.1	13.1	13.0	12.9	12.7	11.0	8.0	...	...	...	...	...	...	...	...	...	...	...	...	...	...	...	N04400	B164
16.5	16.1	15.7	15.3	15.0	14.7	14.5	14.2	14.0	13.8	11.6	9.3	7.4	5.9	4.7	3.8	3.0	2.4	1.9	1.4	1.1	0.86	N08810	B408
16.5	16.1	15.7	15.3	15.0	14.7	14.5	14.2	14.0	13.7	12.9	10.4	8.3	6.7	5.4	4.3	3.4	2.7	2.2	1.6	1.2	0.91	N08811	B408
20.0	20.0	20.0	20.0	20.0	20.0	20.0	20.0	19.9	17.0	13.0	9.8	6.6	4.2	2.0	1.6	1.1	1.0	0.8	...	...	...	N08800	B408
18.6	*18.2*	*17.8*	*17.5*	*17.2*	...	...	...	...	...	...	...	...	...	...	...	...	...	...	...	...	...	N08320	B621
19.5	**19.2**	**19.0**	18.8	**18.7**	18.6	18.5	18.4	18.3	...	...	...	...	...	...	...	...	...	...	...	...	...	N06007	B581
23.3	*23.3*	*23.3*	*23.2*	*23.0*	22.9	22.8	22.6	22.3	...	...	...	...	...	...	...	...	...	...	...	...	...	N08825	B425
22.7	**22.4**	*22.2*	*22.0*	*21.8*	*21.7*	*20.0*	*19.5*	*18.9*	...	...	...	...	...	...	...	...	...	...	...	...	...	N06007	B581
21.3	**20.9**	**20.5**	**20.1**	**19.7**	...	...	...	...	...	...	...	...	...	...	...	...	...	...	...	...	...	N06030	B581
22.2	**21.7**	**21.3**	**20.9**	**20.5**	...	...	...	...	...	...	...	...	...	...	...	...	...	...	...	...	...	N08031	B649
23.1	22.9	22.7	20.0	14.5	8.5	4.0	1.9	...	...	...	...	...	...	...	...	...	...	...	...	...	...	N04400	B164
19.7	**19.4**	**19.2**	**19.0**	**18.8**	...	...	...	...	...	...	...	...	...	...	...	...	...	...	...	...	...	N06035	B574
26.7	*26.7*	*26.5*	*26.1*	*25.8*	...	...	...	...	...	...	...	...	...	...	...	...	...	...	...	...	...	N06455	B574
25.2	**24.6**	**24.0**	**23.5**	**23.1**	**22.8**	**22.6**	**22.4**	**22.3**	18.5	15.0	12.2	9.8	7.8	...	...	...	...	...	...	...	...	N10276	B574
27.7	**27.3**	**27.0**	**26.7**	**26.4**	...	...	...	...	...	...	...	...	...	...	...	...	...	...	...	...	...	N10362	B574
33.3	33.3	33.3	33.3	33.3	33.1	32.8	32.5	31.2	31.2	23.1	21.0	13.2	...	...	...	...	...	...	...	...	...	N06625	B446
38.0	37.7	37.4	37.4	37.4	37.4	37.4	37.4	37.4	37.4	37.4	27.7	21.0	13.2	...	...	...	...	...	...	...	...	N06625	B446
29.6	**29.1**	**28.7**	**28.4**	**28.2**	**28.2**	**28.2**	**28.2**	**28.2**	**28.2**	23.2	19.0	15.6	12.9	10.6	8.5	6.7	5.3	4.1	2.9	2.1	1.5	N06230	B572
28.2	**27.5**	**26.8**	**26.1**	**25.5**	...	...	...	...	...	...	...	...	...	...	...	...	...	...	...	...	...	N06059	B574
26.9	**26.2**	**25.7**	**25.4**	**25.2**	...	...	...	...	...	...	...	...	...	...	...	...	...	...	...	...	...	N06200	B574
34.0	*34.0*	*34.0*	**33.9**	**33.5**	...	...	...	...	...	...	...	...	...	...	...	...	...	...	...	...	...	N10675	B335
																						Castings (2)	
24.0	24.0	24.0	24.0	24.0	24.0	24.0	24.0	22.8	...	...	...	...	...	...	...	...	...	...	...	...	...	CW-12MW	A494
24.0	24.0	24.0	24.0	24.0	24.0	24.0	24.0	22.8	...	...	...	...	...	...	...	...	...	...	...	...	...	CW-6M	A494
...	...	...	...	...	...	...	...	...	...	...	...	...	...	...	...	...	...	...	...	...	...	CX-2MW	A494

Copyright © 2015 by the American Society of Mechanical Engineers.
No reproduction may be made of this material without written consent of ASME.

Table A-1 Basic Allowable Stresses in Tension for Metals (Cont'd)

Numbers in Parentheses Refer to Notes for Appendix A Tables; Specifications Are ASTM Unless Otherwise Indicated

Nominal Composition	Spec. No.	Type/ Grade	UNS No.	P-No. (5)	Notes	Min. Temp., °F (6)	Specified Min. Strength, ksi		Basic Allowable Stress, *S*, ksi, at Metal Temperature, °F [Note (1)]		
							Tensile	Yield	Min. Temp. to 100	150	200
Titanium and Titanium Alloy Pipes and Tubes (2)											
Ti	B861	1	R50250	51	. . .	−75	35	20	11.7	10.7	9.3
Ti	B862	1	R50250	51	. . .	−75	35	20	11.7	10.7	9.3
Ti	B861	2	R50400	51	. . .	−75	50	40	16.7	16.0	14.5
Ti	B862	2	R50400	51	. . .	−75	50	40	16.7	16.0	14.5
Ti–0.2Pd	B861	7	R52400	51	. . .	−75	50	40	16.7	16.0	14.5
Ti–0.2Pd	B862	7	R52400	51	. . .	−75	50	40	16.7	16.0	14.5
Ti	B861	3	R50550	52	. . .	−75	65	55	21.7	20.4	18.4
Ti	B862	3	R50550	52	. . .	−75	65	55	21.7	20.4	18.4
Plates and Sheets											
Ti	B265	1	R50250	51	. . .	−75	35	25	11.7	10.9	9.6
Ti	B265	2	R50400	51	. . .	−75	50	40	16.7	16.0	14.5
Ti	B265	3	R50550	52	. . .	−75	65	55	21.7	20.4	18.4
Forgings											
Ti	B381	F1	R50250	51	. . .	−75	35	25	11.7	10.9	9.6
Ti	B381	F2	R50400	51	. . .	−75	50	40	16.7	16.0	14.5
Ti	B381	F3	R50550	52	. . .	−75	65	55	21.7	20.4	18.4
Zirconium and Zirconium Alloy Pipes and Tubes (2)											
Zr	B523	. . .	R60702	61	. . .	−75	55	30	18.3	17.2	15.4
Zr	B658	. . .	R60702	61	. . .	−75	55	30	18.3	17.2	15.4
Zr + Cb	B523	. . .	R60705	62	(73)	−75	80	55	26.7	24.4	22.1
Zr + Cb	B658	. . .	R60705	62	(73)	−75	80	55	26.7	24.4	22.1
Plates and Sheets											
Zr	B551	. . .	R60702	61	. . .	−75	55	30	18.3	17.2	15.4
Zr + Cb	B551	. . .	R60705	62	(73)	−75	80	55	26.7	24.4	22.1
Forgings and Bar											
Zr	B493	. . .	R60702	61	. . .	−75	55	30	18.3	17.2	15.4
Zr	B550	. . .	R60702	61	. . .	−75	55	30	18.3	17.2	15.4
Zr + Cb	B493	. . .	R60705	62	(73)	−75	70	55	26.7	24.4	22.1
Zr + Cb	B550	. . .	R60705	62	(73)	−75	80	55	26.7	24.4	22.1

Copyright © 2015 by the American Society of Mechanical Engineers.
No reproduction may be made of this material without written consent of ASME.

Table A-1 Basic Allowable Stresses in Tension for Metals (Cont'd)

Numbers in Parentheses Refer to Notes for Appendix A Tables; Specifications Are ASTM Unless Otherwise Indicated

Basic Allowable Stress, *S*, ksi, at Metal Temperature, °F [Note (1)]											
250	300	350	400	450	500	550	600	650	700	UNS No.	Spec. No.
											Titanium and Titanium Alloy Pipes and Tubes (2)
8.2	7.2	6.3	5.5	4.8	4.2	3.8	3.5	. . .	. . .	R50250	B861
8.2	7.2	6.3	5.5	4.8	4.2	3.8	3.5	. . .	. . .	R50250	B862
13.2	12.1	11.1	10.3	9.6	8.9	8.2	7.6	. . .	. . .	R50400	B861
13.2	12.1	11.1	10.3	9.6	8.9	8.2	7.6	. . .	. . .	R50400	B862
13.2	12.1	11.1	10.3	9.6	8.9	8.2	7.6	. . .	. . .	R52400	B861
13.2	12.1	11.1	10.3	9.6	8.9	8.2	7.6	. . .	. . .	R52400	B862
16.6	14.9	13.4	12.1	10.9	9.9	9.2	8.6	. . .	. . .	R50550	B861
16.6	14.9	13.4	12.1	10.9	9.9	9.2	8.6	. . .	. . .	R50550	B862
											Plates and Sheets
8.6	7.7	7.0	6.4	5.9	5.2	4.7	4.2	. . .	. . .	R50250	B265
13.2	12.1	11.1	10.3	9.6	8.9	8.2	7.6	. . .	. . .	R50400	B265
16.6	14.9	13.4	12.1	10.9	9.9	9.2	8.6	. . .	. . .	R50550	B265
											Forgings
8.6	7.7	7.0	6.4	5.9	5.2	4.7	4.2	. . .	. . .	R50250	B381
13.2	12.1	11.1	10.3	9.6	8.9	8.2	7.6	. . .	. . .	R50400	B381
16.6	14.9	13.4	12.1	10.9	9.9	9.2	8.6	. . .	. . .	R50550	B381
											Zirconium and Zirconium Alloy Pipes and Tubes (2)
13.6	12.0	10.6	9.3	8.3	7.4	6.6	6.0	5.6	5.2	R60702	B523
13.6	12.0	10.6	9.3	8.3	7.4	6.6	6.0	5.6	5.2	R60702	B658
20.4	18.9	17.7	16.7	15.8	15.0	14.4	13.9	13.5	13.2	R60705	B523
20.4	18.9	17.7	16.7	15.8	15.0	14.4	13.9	13.5	13.2	R60705	B658
											Plates and Sheets
13.6	12.0	10.6	9.3	8.3	7.4	6.6	6.0	5.6	5.2	R60702	B551
20.4	18.9	17.7	16.7	15.8	15.0	14.4	13.9	13.5	13.2	R60705	B551
											Forgings and Bar
13.6	12.0	10.6	9.3	8.3	7.4	6.6	6.0	5.6	5.2	R60702	B493
13.6	12.0	10.6	9.3	8.3	7.4	6.6	6.0	5.6	5.2	R60702	B550
20.4	18.9	17.7	16.7	15.8	15.0	14.4	13.9	13.5	13.2	R60705	B493
20.4	18.9	17.7	16.7	15.8	15.0	14.4	13.9	13.5	13.2	R60705	B550

Copyright © 2015 by the American Society of Mechanical Engineers.
No reproduction may be made of this material without written consent of ASME.

Table A-1 Basic Allowable Stresses in Tension for Metals (Cont'd)

Numbers in Parentheses Refer to Notes for Appendix A Tables; Specifications Are ASTM Unless Otherwise Indicated

Spec. No.	Type/Grade	UNS No.	Class/ Condition/ Temper	Size or Thickness Range, in.	P-No. (5)	Notes	Min. Temp., °F (6)	Specified Min. Strength, ksi Tensile	Specified Min. Strength, ksi Yield	Basic Allowable Stress, *S*, ksi, at Metal Temperature, °F [Note (1)] Min. Temp. to 100	150	200	250	300	350	400
Aluminum Alloy																
Seamless Pipes and Tubes																
B210	1060	A91060	O	...	21	(14)(33)	−452	8.5	2.5	1.7	1.7	1.6	1.4	1.2	1.1	0.8
B210	1060	A91060	H112	...	21	(14)(33)	−452	8.5	2.5	1.7	1.7	1.6	1.4	1.2	1.1	0.8
B210	1060	A91060	H113	...	21	(14)(33)	−452	8.5	2.5	1.7	1.7	1.6	1.4	1.2	1.1	0.8
B241	1060	A91060	O	...	21	(14)(33)	−452	8.5	2.5	1.7	1.7	1.6	1.4	1.2	1.1	0.8
B241	1060	A91060	H112	...	21	(14)(33)	−452	8.5	2.5	1.7	1.7	1.6	1.4	1.2	1.1	0.8
B241	1060	A91060	H113	...	21	(14)(33)	−452	8.5	2.5	1.7	1.7	1.6	1.4	1.2	1.1	0.8
B345	1060	A91060	O	...	21	(14)(33)	−452	8.5	2.5	1.7	1.7	1.6	1.4	1.2	1.1	0.8
B345	1060	A91060	H112	...	21	(14)(33)	−452	8.5	2.5	1.7	1.7	1.6	1.4	1.2	1.1	0.8
B345	1060	A91060	H113	...	21	(14)(33)	−452	8.5	2.5	1.7	1.7	1.6	1.4	1.2	1.1	0.8
B210	1060	A91060	H14	...	21	(14)(33)	−452	12	10	4.0	4.0	4.0	4.0	2.7	1.8	1.1
B241	1100	A91100	O	...	21	(14)(33)	−452	11	3	2.0	2.0	2.0	1.9	1.7	1.3	1.0
B241	1100	A91100	H112	...	21	(14)(33)	−452	11	3	2.0	2.0	2.0	1.9	1.7	1.3	1.0
B210	1100	A91100	H113	...	21	(14)(33)	−452	11	3.5	2.3	2.3	2.3	2.3	1.7	1.3	1.0
B210	1100	A91100	H14	...	21	(14)(33)	−452	16	14	5.3	5.3	5.3	4.9	2.8	1.9	1.1
B210	3003	A93003	O	...	21	(14)(33)	−452	14	5	3.3	3.2	3.1	3.0	2.7	1.9	1.5
B210	3003	A93003	H112	...	21	(14)(33)	−452	14	5	3.3	3.2	3.1	3.0	2.7	1.9	1.5
B241	3003	A93003	O	...	21	(14)(33)	−452	14	5	3.3	3.2	3.1	3.0	2.7	1.9	1.5
B241	3003	A93003	H112	...	21	(14)(33)	−452	14	5	3.3	3.2	3.1	3.0	2.7	1.9	1.5
B345	3003	A93003	O	...	21	(14)(33)	−452	14	5	3.3	3.2	3.1	3.0	2.7	1.9	1.5
B345	3003	A93003	H112	...	21	(14)(33)	−452	14	5	3.3	3.2	3.1	3.0	2.7	1.9	1.5
B491	3003	A93003	O	...	21	(14)(33)	−452	14	5	3.3	3.2	3.1	3.0	2.7	1.9	1.5
B491	3003	A93003	H112	...	21	(14)(33)	−452	14	5	3.3	3.2	3.1	3.0	2.7	1.9	1.5
B210	3003	A93003	H14	...	21	(14)(33)	−452	20	17	6.7	6.7	6.5	4.8	4.3	3.0	2.3
B210	3003	A93003	H18	...	21	(14)(33)	−452	27	24	9.0	9.0	8.7	8.0	5.3	3.5	2.5
B241	3003	A93003	H18	...	21	(14)(33)	−452	27	24	9.0	9.0	8.7	8.0	5.3	3.5	2.5
B345	3003	A93003	H18	...	21	(14)(33)	−452	27	24	9.0	9.0	8.7	8.0	5.3	3.5	2.5
B210	Alclad 3003	A83003	O	...	21	(14)(33)	−452	13	4.5	3.0	2.9	2.8	2.7	2.5	1.9	1.5
B210	Alclad 3003	A83003	H112	...	21	(14)(33)	−452	13	4.5	3.0	2.9	2.8	2.7	2.5	1.9	1.5
B241	Alclad 3003	A83003	O	...	21	(14)(33)	−452	13	4.5	3.0	2.9	2.8	2.7	2.5	1.9	1.5
B241	Alclad 3003	A83003	H112	...	21	(14)(33)	−452	13	4.5	3.0	2.9	2.8	2.7	2.5	1.9	1.5
B345	Alclad 3003	A83003	O	...	21	(14)(33)	−452	13	4.5	3.0	2.9	2.8	2.7	2.5	1.9	1.5
B345	Alclad 3003	A83003	H112	...	21	(14)(33)	−452	13	4.5	3.0	2.9	2.8	2.7	2.5	1.9	1.5
B210	Alclad 3003	A83003	H14	...	21	(14)(33)	−452	19	16	6.3	6.3	6.3	6.1	4.3	3.0	2.3
B210	Alclad 3003	A83003	H18	...	21	(14)(33)	−452	26	23	8.7	8.7	8.7	8.4	4.3	3.0	2.3
B210	5052	A95052	O	...	22	(14)	−452	25	10	6.7	6.7	6.7	6.6	6.1	4.1	2.3
B241	5052	A95052	O	...	22	(14)	−452	25	10	6.7	6.7	6.7	6.6	6.1	4.1	2.3
B210	5052	A95052	H32	...	22	(14)(33)	−452	31	23	10.3	10.3	10.3	10.3	6.1	4.1	2.3
B210	5052	A95052	H34	...	22	(14)(33)	−452	34	26	11.3	11.3	11.3	11.3	6.1	4.1	2.3
B241	5083	A95083	O	...	25	(33)	−452	39	16	10.7	10.7	...	...	...	...	...
B241	5083	A95083	H112	...	25	(33)	−452	39	16	10.7	10.7	...	...	...	...	...
B210	5083	A95083	O	...	25	(33)	−452	39	16	10.7	10.7	...	...	...	...	...
B210	5083	A95083	H112	...	25	(33)	−452	39	16	10.7	10.7	...	...	...	...	...
B345	5083	A95083	O	...	25	(33)	−452	39	16	10.7	10.7	...	...	...	...	...
B345	5083	A95083	H112	...	25	(33)	−452	39	16	10.7	10.7	...	...	...	...	...

Copyright © 2015 by the American Society of Mechanical Engineers.
No reproduction may be made of this material without written consent of ASME.

Table A-1 Basic Allowable Stresses in Tension for Metals (Cont'd)

Numbers in Parentheses Refer to Notes for Appendix A Tables; Specifications Are ASTM Unless Otherwise Indicated

Spec. No.	Type/Grade	UNS No.	Class/ Condition/ Temper	Size or Thickness Range, in.	P-No. (5)	Notes	Min. Temp., °F (6)	Specified Min. Strength, ksi Tensile	Specified Min. Strength, ksi Yield	Basic Allowable Stress, *S*, ksi, at Metal Temperature, °F [Note (1)] Min. Temp. to 100	150	200	250	300	350	400
Aluminum Alloy (Cont'd)																
Seamless Pipes and Tubes (Cont'd)																
B241	5086	A95086	O	. . .	25	(33)	−452	35	14	9.3	9.3	. . .	. . .	. . .	. . .	. . .
B241	5086	A95086	H112	. . .	25	(33)	−452	35	14	9.3	9.3	. . .	. . .	. . .	. . .	. . .
B210	5086	A95086	O	. . .	25	(33)	−452	35	14	9.3	9.3	. . .	. . .	. . .	. . .	. . .
B210	5086	A95086	H112	. . .	25	(33)	−452	35	14	9.3	9.3	. . .	. . .	. . .	. . .	. . .
B345	5086	A95086	O	. . .	25	(33)	−452	35	14	9.3	9.3	. . .	. . .	. . .	. . .	. . .
B345	5086	A95086	H112	. . .	25	(33)	−452	35	14	9.3	9.3	. . .	. . .	. . .	. . .	. . .
B210	5086	A95086	H32	. . .	25	(33)	−452	40	28	13.3	13.3	. . .	. . .	. . .	. . .	. . .
B210	5086	A95086	H34	. . .	25	(33)	−452	44	34	14.7	14.7	. . .	. . .	. . .	. . .	. . .
B210	5154	A95154	O	. . .	22	. . .	−452	30	11	7.3	7.3	. . .	. . .	. . .	. . .	. . .
B210	5154	A95154	H34	. . .	22	(33)	−452	39	29	13.3	13.0	. . .	. . .	. . .	. . .	. . .
B241	5454	A95454	O	. . .	22	(33)	−452	31	12	8.0	8.0	8.0	7.4	5.5	4.1	3.0
B241	5454	A95454	H112	. . .	22	(33)	−452	31	12	8.0	8.0	8.0	7.4	5.5	4.1	3.0
B210	5456	A95456	O	. . .	25	(33)	−452	41	19	12.7	12.7	. . .	. . .	. . .	. . .	. . .
B210	5456	A95456	H112	. . .	25	(33)	−452	41	19	12.7	12.7	. . .	. . .	. . .	. . .	. . .
B241	5456	A95456	O	. . .	25	(33)	−452	41	19	12.7	12.7	. . .	. . .	. . .	. . .	. . .
B241	5456	A95456	H112	. . .	25	(33)	−452	41	19	12.7	12.7	. . .	. . .	. . .	. . .	. . .
B210	6061	A96061	T4	. . .	23	(33)	−452	30	16	10.0	10.0	10.0	9.9	9.5	8.4	5.2
B241	6061	A96061	T4	. . .	23	(33)(63)	−452	26	16	8.7	8.7	8.7	8.7	8.3	7.4	5.2
B345	6061	A96061	T4	. . .	23	(33)(63)	−452	26	16	8.7	8.7	8.7	8.7	8.3	7.4	5.2
B210	6061	A96061	T6	. . .	23	(33)	−452	42	35	14.0	14.0	14.0	13.6	11.7	8.9	5.2
B241	6061	A96061	T6	. . .	23	(33)(63)	−452	38	35	12.7	12.7	12.7	12.3	10.5	8.1	5.2
B345	6061	A96061	T6	. . .	23	(33)(63)	−452	38	35	12.7	12.7	12.7	12.3	10.5	8.1	5.2
B210	6061	A96061	T4 wld.	. . .	23	(22)(63)	−452	24	. . .	8.0	8.0	8.0	8.0	7.7	6.9	5.1
B210	6061	A96061	T6 wld.	. . .	23	(22)(63)	−452	24	. . .	8.0	8.0	8.0	8.0	7.7	6.9	5.1
B241	6061	A96061	T4 wld.	. . .	23	(22)(63)	−452	24	. . .	8.0	8.0	8.0	8.0	7.7	6.9	5.1
B241	6061	A96061	T6 wld.	. . .	23	(22)(63)	−452	24	. . .	8.0	8.0	8.0	8.0	7.7	6.9	5.1
B345	6061	A96061	T4 wld.	. . .	23	(22)(63)	−452	24	. . .	8.0	8.0	8.0	8.0	7.7	6.9	5.1
B345	6061	A96061	T6 wld.	. . .	23	(22)(63)	−452	24	. . .	8.0	8.0	8.0	8.0	7.7	6.9	5.1
B210	6063	A96063	T4	. . .	23	(33)	−452	22	10	6.7	6.5	6.5	6.3	6.3	4.5	1.7
B241	6063	A96063	T4	≤ 0.500	23	(33)	−452	19	10	6.3	6.3	6.3	6.3	5.8	3.9	1.5
B345	6063	A96063	T4	≤ 0.500	23	(33)	−452	19	10	6.3	6.3	6.3	6.3	5.8	3.9	1.5
B241	6063	A96063	T5	≤ 0.500	23	(33)	−452	22	16	7.3	7.3	7.3	7.3	7.1	3.8	2.0
B345	6063	A96063	T5	≤ 0.500	23	(33)	−452	22	16	7.3	7.3	7.3	7.3	7.1	3.8	2.0
B210	6063	A96063	T6	. . .	23	(33)	−452	33	28	11.0	11.0	11.0	9.6	7.3	3.8	2.0
B241	6063	A96063	T6	. . .	23	(33)	−452	30	25	10.0	10.0	10.0	9.1	7.2	3.4	2.0
B345	6063	A96063	T6	. . .	23	(33)	−452	30	25	10.0	10.0	10.0	9.1	7.2	3.4	2.0

Copyright © 2015 by the American Society of Mechanical Engineers.
No reproduction may be made of this material without written consent of ASME.

Table A-1 Basic Allowable Stresses in Tension for Metals (Cont'd)

Numbers in Parentheses Refer to Notes for Appendix A Tables; Specifications Are ASTM Unless Otherwise Indicated

Spec. No.	Type/Grade	UNS No.	Class/ Condition/ Temper	Size or Thickness Range, in.	P-No. (5)	Notes	Min. Temp., °F (6)	Specified Min. Strength, ksi Tensile	Specified Min. Strength, ksi Yield	Basic Allowable Stress, *S*, ksi, at Metal Temperature, °F [Note (1)] Min. Temp. to 100	150	200	250	300	350	400
Aluminum Alloy (Cont'd)																
Seamless Pipes and Tubes (Cont'd)																
B210	6063	A96063	T4 wld.	. . .	23	. . .	−452	17	. . .	5.7	5.7	5.6	5.3	4.8	3.8	2.0
B210	6063	A96063	T5 wld.	. . .	23	. . .	−452	17	. . .	5.7	5.7	5.6	5.3	4.8	3.8	2.0
B210	6063	A96063	T6 wld.	. . .	23	. . .	−452	17	. . .	5.7	5.7	5.6	5.3	4.8	3.8	2.0
B241	6063	A96063	T4 wld.	. . .	23	. . .	−452	17	. . .	5.7	5.7	5.6	5.3	4.8	3.8	2.0
B241	6063	A96063	T5 wld.	. . .	23	. . .	−452	17	. . .	5.7	5.7	5.6	5.3	4.8	3.8	2.0
B241	6063	A96063	T6 wld.	. . .	23	. . .	−452	17	. . .	5.7	5.7	5.6	5.3	4.8	3.8	2.0
B345	6063	A96063	T4 wld.	. . .	23	. . .	−452	17	. . .	5.7	5.7	5.6	5.3	4.8	3.8	2.0
B345	6063	A96063	T5 wld.	. . .	23	. . .	−452	17	. . .	5.7	5.7	5.6	5.3	4.8	3.8	2.0
B345	6063	A96063	T6 wld.	. . .	23	. . .	−452	17	. . .	5.7	5.7	5.6	5.3	4.8	3.8	2.0
Welded Pipes and Tubes																
B547	5083	A95083	O	. . .	25	. . .	−452	40	18	12.0	12.0	. . .	. . .	. . .	. . .	. . .
Structural Tubes																
B221	1060	A91060	O	. . .	21	(33)(69)	−452	8.5	2.5	1.7	1.7	1.6	1.4	1.2	1.1	0.8
B221	1060	A91060	H112	. . .	21	(33)(69)	−452	8.5	2.5	1.7	1.7	1.6	1.4	1.2	1.1	0.8
B221	1100	A91100	O	. . .	21	(33)(69)	−452	11	3	2.0	2.0	2.0	1.9	1.7	1.3	1.0
B221	1100	A91100	H112	. . .	21	(33)(69)	−452	11	3	2.0	2.0	2.0	1.9	1.7	1.3	1.0
B221	3003	A93003	O	. . .	21	(33)(69)	−452	14	5	3.3	3.2	3.1	3.0	2.7	1.9	1.5
B221	3003	A93003	H112	. . .	21	(33)(69)	−452	14	5	3.3	3.2	3.1	3.0	2.7	1.9	1.5
B221	Alclad 3003	A83003	O	. . .	21	(33)(69)	−452	13	4.5	3.0	2.9	2.8	2.7	2.5	1.9	1.5
B221	Alclad 3003	A83003	H112	. . .	21	(33)(69)	−452	13	4.5	3.0	2.9	2.8	2.7	2.5	1.9	1.5
B221	5052	A95052	O	. . .	22	(69)	−452	25	10	6.7	6.7	6.7	6.6	6.1	4.1	2.3
B221	5083	A95083	O	. . .	25	(69)	−452	39	16	10.7	10.7	. . .	. . .	. . .	. . .	. . .
B221	5086	A95086	O	. . .	25	(69)	−452	35	14	9.3	9.3	. . .	. . .	. . .	. . .	. . .
B221	5154	A95154	O	. . .	22	(69)	−452	30	11	7.3	7.3	. . .	. . .	. . .	. . .	. . .
B221	5454	A95454	O	. . .	22	(69)	−452	31	12	8.0	8.0	8.0	7.4	5.5	4.1	3.0
B221	5456	A95456	O	. . .	25	(69)	−452	41	19	12.7	12.7	. . .	. . .	. . .	. . .	. . .
B221	6061	A96061	T4	. . .	23	(33)(63)(69)	−452	26	16	8.7	8.7	8.7	8.7	8.3	7.4	5.2
B221	6061	A96061	T6	. . .	23	(33)(63)(69)	−452	38	35	12.7	12.7	12.7	12.3	10.5	8.1	5.2
B221	6061	A96061	T4 wld.	. . .	23	(22)(63)(69)	−452	24	. . .	8.0	8.0	8.0	8.0	7.7	6.9	5.1
B221	6061	A96061	T6 wld.	. . .	23	(22)(63)(69)	−452	24	. . .	8.0	8.0	8.0	8.0	7.7	6.9	5.1
B221	6063	A96063	T4	≤ 0.500	23	(13)(33)(69)	−452	19	10	6.3	6.3	6.3	6.3	5.8	3.9	1.5
B221	6063	A96063	T5	≤ 0.500	23	(13)(33)(69)	−452	22	16	7.3	7.3	7.3	7.3	7.1	3.8	2.0
B221	6063	A96063	T6	. . .	23	(33)(69)	−452	30	25	10.0	10.0	10.0	9.1	7.2	3.4	2.0
B221	6063	A96063	T4 wld.	. . .	23	(69)	−452	17	. . .	5.7	5.7	5.6	5.3	4.8	3.8	2.0
B221	6063	A96063	T5 wld.	. . .	23	(69)	−452	17	. . .	5.7	5.7	5.6	5.3	4.8	3.8	2.0
B221	6063	A96063	T6 wld.	. . .	23	(69)	−452	17	. . .	5.7	5.7	5.6	5.3	4.8	3.8	2.0

Copyright © 2015 by the American Society of Mechanical Engineers.
No reproduction may be made of this material without written consent of ASME.

Table A-1 Basic Allowable Stresses in Tension for Metals (Cont'd)

Numbers in Parentheses Refer to Notes for Appendix A Tables; Specifications Are ASTM Unless Otherwise Indicated

Spec. No.	Type/Grade	UNS No.	Class/ Condition/ Temper	Size or Thickness Range, in.	P-No. (5)	Notes	Min. Temp., °F (6)	Specified Min. Strength, ksi Tensile	Specified Min. Strength, ksi Yield	Basic Allowable Stress, *S*, ksi, at Metal Temperature, °F [Note (1)] Min. Temp. to 100	150	200	250	300	350	400
Aluminum Alloy (Cont'd)																
Plates and Sheets																
B209	1060	A91060	O	. . .	21	. . .	−452	8	2.5	1.7	1.6	1.6	1.4	1.2	1.1	0.8
B209	1060	A91060	H112	0.500–1.000	21	(13)(33)	−452	10	5	3.3	3.2	2.9	2.5	2.0	1.5	0.9
B209	1060	A91060	H12	. . .	21	(33)	−452	11	9	3.7	3.7	3.4	3.1	2.7	1.8	1.1
B209	1060	A91060	H14	. . .	21	(33)	−452	12	10	4.0	4.0	4.0	4.0	2.7	1.8	1.1
B209	1100	A91100	O	. . .	21	. . .	−452	11	3.5	2.3	2.3	2.3	2.3	1.7	1.3	1.0
B209	1100	A91100	H112	0.500–2.000	21	(13)(33)	−452	12	5	3.3	3.3	3.3	3.2	2.4	1.7	1.0
B209	1100	A91100	H12	. . .	21	(33)	−452	14	11	4.7	4.7	4.6	3.8	2.8	1.9	1.1
B209	1100	A91100	H14	. . .	21	(33)	−452	16	14	5.3	5.3	5.3	4.9	2.8	1.9	1.1
B209	3003	A93003	O	. . .	21	. . .	−452	14	5	3.3	3.2	3.1	3.0	2.7	1.9	1.5
B209	3003	A93003	H112	0.500–2.000	21	(13)(33)	−452	15	6	4.0	3.9	3.7	3.6	2.7	1.9	1.5
B209	3003	A93003	H12	. . .	21	(33)	−452	17	12	5.7	5.7	5.6	5.2	4.3	3.0	2.3
B209	3003	A93003	H14	. . .	21	(33)	−452	20	17	6.7	6.7	6.7	6.5	4.3	3.0	2.3
B209	Alclad 3003	A83003	O	0.006–0.499	21	(66)	−452	13	4.5	3.0	2.9	2.8	2.7	2.5	1.9	1.5
B209	Alclad 3003	A83003	O	0.500–3.000	21	(68)	−452	14	5	3.3	3.2	3.1	3.0	2.7	1.9	1.5
B209	Alclad 3003	A83003	H112	0.500–2.000	21	(33)(66)	−452	15	6	4.0	3.9	3.7	3.6	2.7	1.9	1.5
B209	Alclad 3003	A83003	H12	0.017–0.499	21	(33)(66)	−452	16	11	5.3	5.3	5.2	4.9	4.3	3.0	2.3
B209	Alclad 3003	A83003	H12	0.500–2.000	21	(33)(68)	−452	17	12	5.7	5.7	5.7	5.7	4.3	3.0	2.3
B209	Alclad 3003	A83003	H14	0.009–0.499	21	(33)(66)	−452	19	16	6.3	6.3	6.3	6.1	4.3	3.0	2.3
B209	Alclad 3003	A83003	H14	0.500–1.000	21	(33)(68)	−452	20	17	6.7	6.7	6.7	6.5	4.3	3.0	2.3
B209	3004	A93004	O	. . .	22	. . .	−452	22	8.5	5.7	5.7	5.7	5.7	5.7	3.8	2.3
B209	3004	A93004	H112	. . .	22	(33)	−452	23	9	6.0	6.0	6.0	6.0	5.8	3.8	2.3
B209	3004	A93004	H32	. . .	22	(33)	−452	28	21	9.3	9.3	9.3	9.3	5.7	3.8	2.3
B209	3004	A93004	H34	. . .	22	(33)	−452	32	25	10.7	10.7	10.7	10.7	5.7	3.8	2.3
B209	Alclad 3004	A83004	O	0.006–0.499	22	(66)	−452	21	8	5.3	5.3	5.3	5.3	5.3	3.8	2.3
B209	Alclad 3004	A83004	O	0.500–3.000	22	(68)	−452	22	8.5	5.7	5.6	5.6	5.6	5.6	3.8	2.3
B209	Alclad 3004	A83004	H112	0.250–0.499	22	(33)(66)	−452	22	8.5	5.7	5.6	5.6	5.6	5.6	3.8	2.3
B209	Alclad 3004	A83004	H112	0.500–3.000	22	(33)(68)	−452	23	9	6.0	6.0	6.0	6.0	5.7	3.8	2.3
B209	Alclad 3004	A83004	H32	0.017–0.499	22	(33)(66)	−452	27	20	9.0	9.0	9.0	9.0	5.7	3.8	2.3
B209	Alclad 3004	A83004	H32	0.500–2.000	22	(33)(68)	−452	28	21	9.3	9.3	9.3	9.3	5.7	3.8	2.3
B209	Alclad 3004	A83004	H34	0.009–0.499	22	(33)(66)	−452	31	24	10.3	10.3	10.3	10.3	5.7	3.8	2.3
B209	Alclad 3004	A83004	H34	0.500–1.000	22	(33)(68)	−452	32	25	10.7	10.7	10.7	10.7	5.7	3.8	2.3
B209	5050	A95050	O	. . .	21	. . .	−452	18	6	4.0	4.0	4.0	4.0	4.0	2.8	1.4
B209	5050	A95050	H112	. . .	21	(33)	−452	20	8	5.3	5.3	5.3	5.2	5.2	2.8	1.4
B209	5050	A95050	H32	. . .	21	(33)	−452	22	16	7.3	7.3	7.3	7.3	5.3	2.8	1.4
B209	5050	A95050	H34	. . .	21	(33)	−452	25	20	8.3	8.3	8.3	7.8	5.3	2.8	1.4
B209	5052	A95052	O	. . .	22	. . .	−452	25	9.5	6.3	6.3	6.3	6.2	6.1	4.1	2.3
B209	5652	A95652	O	. . .	22	. . .	−452	25	9.5	6.3	6.3	6.3	6.2	6.1	4.1	2.3
B209	5052	A95052	H112	0.500–3.000	22	(13)(33)	−452	25	9.5	6.3	6.3	6.3	6.3	6.1	4.1	2.3
B209	5652	A95652	H112	0.500–3.000	22	(13)(33)	−452	25	9.5	6.3	6.3	6.3	6.3	6.1	4.1	2.3
B209	5052	A95052	H32	. . .	22	(33)	−452	31	23	10.3	10.3	10.3	10.3	6.1	4.1	2.3
B209	5652	A95652	H32	. . .	22	(33)	−452	31	23	10.3	10.3	10.3	10.3	6.1	4.1	2.3
B209	5052	A95052	H34	. . .	22	(33)	−452	34	26	11.3	11.3	11.3	11.3	6.1	4.1	2.3
B209	5652	A95652	H34	. . .	22	(33)	−452	34	26	11.3	11.3	11.3	11.3	6.1	4.1	2.3

Copyright © 2015 by the American Society of Mechanical Engineers.
No reproduction may be made of this material without written consent of ASME.

Table A-1 Basic Allowable Stresses in Tension for Metals (Cont'd)

Numbers in Parentheses Refer to Notes for Appendix A Tables; Specifications Are ASTM Unless Otherwise Indicated

Spec. No.	Type/Grade	UNS No.	Class/ Condition/ Temper	Size or Thickness Range, in.	P-No. (5)	Notes	Min. Temp., °F (6)	Specified Min. Strength, ksi Tensile	Specified Min. Strength, ksi Yield	Basic Allowable Stress, *S*, ksi, at Metal Temperature, °F [Note (1)] Min. Temp. to 100	150	200	250	300	350	400
Aluminum Alloy (Cont'd)																
Plates and Sheets (Cont'd)																
B209	5083	A95083	O	0.051–1.500	25	(13)	−452	40	18	12.0	12.0	...	...	...	...	...
B209	5083	A95083	H32	0.188–1.500	25	(13)(33)	−452	44	31	14.7	14.7	...	...	...	...	...
B209	5086	A95086	O	...	25	...	−452	35	14	9.3	9.3	...	...	...	...	...
B209	5086	A95086	H112	0.500–1.000	25	(13)(33)	−452	35	16	9.3	9.3	...	...	...	...	...
B209	5086	A95086	H32	...	25	(33)	−452	40	28	13.3	13.3	...	...	...	...	...
B209	5086	A95086	H34	...	25	(33)	−452	44	34	14.7	14.7	...	...	...	...	...
B209	5154	A95154	O	...	22	...	−452	30	11	7.3	7.3	...	...	...	...	...
B209	5254	A95254	O	...	22	...	−452	30	11	7.3	7.3	...	...	...	...	...
B209	5154	A95154	H112	0.500–3.000	22	(13)(33)	−452	30	11	7.3	7.3	...	...	...	...	...
B209	5254	A95254	H112	0.500–3.000	22	(13)(33)	−452	30	11	7.3	7.3	...	...	...	...	...
B209	5154	A95154	H32	...	22	(33)	−452	36	26	12.0	12.0	...	...	...	...	...
B209	5254	A95254	H32	...	22	(33)	−452	36	26	12.0	12.0	...	...	...	...	...
B209	5154	A95154	H34	...	22	(33)	−452	39	29	13.0	13.0	...	...	...	...	...
B209	5254	A95254	H34	...	22	(33)	−452	39	29	13.0	13.0	...	...	...	...	...
B209	5454	A95454	O	...	22	...	−452	31	12	8.0	8.0	8.0	7.4	5.5	4.1	3.0
B209	5454	A95454	H112	0.500–3.000	22	(13)(33)	−452	31	12	8.0	8.0	8.0	7.4	5.5	4.1	3.0
B209	5454	A95454	H32	...	22	(33)	−452	36	26	12.0	12.0	12.0	7.5	5.5	4.1	3.0
B209	5454	A95454	H34	...	22	(33)	−452	39	29	13.0	13.0	13.0	7.5	5.5	4.1	3.0
B209	5456	A95456	O	0.051–1.500	25	(13)	−452	42	19	12.7	12.7	...	...	...	...	...
B209	5456	A95456	H32	0.188–0.499	25	(13)(33)	−452	46	33	15.3	15.3	...	...	...	...	...
B209	6061	A96061	T4	...	23	(33)(63)	−452	30	16	10.0	10.0	10.0	9.9	9.5	8.4	5.2
B209	6061	A96061	T6	...	23	(33)	−452	42	35	14.0	14.0	14.0	13.6	11.7	8.9	5.2
B209	6061	A96061	T651	0.250–4.000	23	(13)(33)	−452	42	35	14.0	14.0	14.0	13.6	11.7	8.9	5.2
B209	6061	A96061	T4 wld.	...	23	(22)(63)	−452	24	...	8.0	8.0	8.0	8.0	7.7	6.9	5.1
B209	6061	A96061	T6 wld.	...	23	(22)(63)	−452	24	...	8.0	8.0	8.0	8.0	7.7	6.9	5.1
B209	Alclad 6061	A86061	T4	...	23	(33)(66)	−452	27	14	9.0	9.0	9.0	8.9	8.6	7.6	5.2
B209	Alclad 6061	A86061	T451	0.250–0.499	23	(33)(66)	−452	27	14	9.0	9.0	9.0	8.9	8.6	7.6	5.2
B209	Alclad 6061	A86061	T451	0.500–3.000	23	(33)(68)	−452	30	16	9.0	9.0	9.0	8.9	8.5	8.4	5.2
B209	Alclad 6061	A86061	T6	...	23	(33)(66)	−452	38	32	12.7	12.7	12.7	12.3	10.6	8.1	5.2
B209	Alclad 6061	A86061	T651	0.250–0.499	23	(33)(66)	−452	38	32	12.7	12.7	12.7	12.3	10.6	8.1	5.2
B209	Alclad 6061	A86061	T651	0.500–4.000	23	(33)(68)	−452	42	35	14.0	14.0	14.0	13.6	11.7	8.9	5.2
B209	Alclad 6061	A86061	T4 wld.	...	23	(22)(63)	−452	24	...	8.0	8.0	8.0	8.0	7.7	6.9	5.1
B209	Alclad 6061	A86061	T6 wld.	...	23	(22)(63)	−452	24	...	8.0	8.0	8.0	8.0	7.7	6.9	5.1
Forgings and Fittings (2)																
B247	3003	A93003	H112	...	21	(9)(45)	−452	14	5	3.3	3.2	3.1	3.0	2.7	1.9	1.5
B247	3003	A93003	H112 wld.	...	21	(9)(45)	−452	14	5	3.3	3.2	3.1	3.0	2.7	1.9	1.5
B247	5083	A95083	O	...	25	(9)(32)(33)	−452	39	16	10.7	10.7	...	...	...	...	...
B247	5083	A95083	H112	...	25	(9)(32)(33)	−452	39	16	10.7	10.7	...	...	...	...	...
B247	5083	A95083	H112 wld.	...	25	(9)(32)(33)	−452	39	16	10.7	10.7	...	...	...	...	...
B247	6061	A96061	T6	...	23	(9)(33)	−452	38	35	12.7	12.7	12.7	12.3	10.5	8.1	5.2
B247	6061	A96061	T6 wld.	...	23	(9)(22)	−452	24	...	8.0	8.0	8.0	8.0	7.7	6.9	5.1

Copyright © 2015 by the American Society of Mechanical Engineers.
No reproduction may be made of this material without written consent of ASME.

Table A-1 Basic Allowable Stresses in Tension for Metals (Cont'd) (14)

Numbers in Parentheses Refer to Notes for Appendix A Tables; Specifications Are ASTM Unless Otherwise Indicated

Spec. No.	Type/Grade	UNS No.	Class/ Condition/ Temper	Size or Thickness Range, in.	P-No. (5)	Notes	Min. Temp., °F (6)	Specified Min. Strength, ksi Tensile	Specified Min. Strength, ksi Yield	Basic Allowable Stress, *S*, ksi, at Metal Temperature, °F [Note (1)] Min. Temp. to 100	150	200	250	300	350	400
Aluminum Alloy (Cont'd)																
Forgings and Fittings (2) (Cont'd)																
B361	WP1060	A91060	O	. . .	21	(13)(14)(32)(33)	−452	8	2.5	1.7	1.6	1.6	1.4	1.2	1.1	0.8
B361	WP1060	A91060	H112	. . .	21	(13)(14)(32)(33)	−452	8	2.5	1.7	1.6	1.6	1.4	1.2	1.1	0.8
B361	WP1100	A91100	O	. . .	21	(13)(14)(32)(33)	−452	11	3	2.0	2.0	2.0	1.9	1.7	1.3	1.0
B361	WP1100	A91100	H112	. . .	21	(13)(14)(32)(33)	−452	11	3	2.0	2.0	2.0	1.9	1.7	1.3	1.0
B361	WP3003	A93003	O	. . .	21	(13)(14)(32)(33)	−452	14	5	3.3	3.2	3.1	3.0	2.7	1.9	1.5
B361	WP3003	A93003	H112	. . .	21	(13)(14)(32)(33)	−452	14	5	3.3	3.2	3.1	3.0	2.7	1.9	1.5
B361	WP Alclad 3003	A83003	O	. . .	21	(13)(14)(32)(33)(66)	−452	13	4.5	3.0	2.9	2.8	2.7	2.5	1.9	1.5
B361	WP Alclad 3003	A83003	H112	. . .	21	(13)(14)(32)(33)(66)	−452	13	4.5	3.0	2.9	2.8	2.7	2.5	1.9	1.5
B361	WP5083	A95083	O	. . .	25	(13)(32)(33)	−452	39	16	10.7	10.7	. . .	. . .	. . .	. . .	. . .
B361	WP5083	A95083	H112	. . .	25	(13)(32)(33)	−452	39	16	10.7	10.7	. . .	. . .	. . .	. . .	. . .
B361	WP5154	A95154	O	. . .	22	(32)(33)	−452	30	11	7.3	7.3	. . .	. . .	. . .	. . .	. . .
B361	WP5154	A95154	H112	. . .	22	(32)(33)	−452	30	11	7.3	7.3	. . .	. . .	. . .	. . .	. . .
B361	WP6061	A96061	T4	. . .	23	(13)(32)(33)(63)	−452	26	16	8.7	8.7	8.7	8.7	8.3	7.4	5.2
B361	WP6061	A96061	T6	. . .	23	(13)(32)(33)(63)	−452	38	35	12.7	12.7	12.7	12.3	10.5	8.1	5.2
B361	WP6061	A96061	T4 wld.	. . .	23	(22)(32)(63)	−452	24	. . .	8.0	8.0	8.0	8.0	7.7	6.9	5.1
B361	WP6061	A96061	T6 wld.	. . .	23	(22)(32)(63)	−452	24	. . .	8.0	8.0	8.0	8.0	7.7	6.9	5.1
B361	WP6063	A96063	T4	. . .	23	(13)(32)(33)	−452	18	9	6.0	5.9	5.8	5.7	5.5	3.7	1.4
B361	WP6063	A96063	T6	. . .	23	(13)(32)(33)	−452	30	25	10.0	10.0	10.0	9.1	7.2	3.4	2.0
B361	WP6063	A96063	T4 wld.	. . .	23	(32)	−452	17	. . .	5.7	5.7	5.7	5.7	5.5	3.8	2.0
B361	WP6063	A96063	T6 wld.	. . .	23	(32)	−452	17	. . .	5.7	5.7	5.7	5.7	5.5	3.8	2.0
Castings (2)																
B26	443.0	A04430	F	. . .	. . .	(9)(43)	−452	17	7	4.7	4.7	4.7	4.7	4.7	4.7	3.5
B26	356.0	A03560	T6	. . .	. . .	(9)(43)	−452	30	20	10.0	10.0	10.0	8.4	. . .	. . .	. . .
B26	356.0	A03560	T71	. . .	. . .	(9)(43)	−452	25	18	8.3	8.3	8.3	8.1	7.3	5.5	2.4

Copyright © 2015 by the American Society of Mechanical Engineers.
No reproduction may be made of this material without written consent of ASME.

(14)

Table A-1M Basic Allowable Stresses in Tension for Metals (Metric)

Numbers in Parentheses Refer to Notes for Appendix A Tables; Specifications Are ASTM Unless Otherwise Indicated

Line No.	Nominal Composition	Product Form	Spec. No.	Type/ Grade	UNS No.	Class/ Condition/ Temper	Notes	Min. Temp., °C (6)	Min. Tensile Strgth., MPa	Min. Yield Strgth., MPa	Max. Use Temp., °C
1	Fe	Castings	A48	20	F11401	. . .	(2)(8e)(48)	−30	138	. . .	204
2	Fe	Castings	A278	20	F11401	. . .	(2)(8e)(48)	−30	138	. . .	204
3	Fe	Castings	A126	A	F11501	. . .	(2)(8e)(9)(48)	−30	145	. . .	204
4	Fe	Castings	A48	25	F11701	. . .	(2)(8e)(48)	−30	172	. . .	204
5	Fe	Castings	A278	25	F11701	. . .	(2)(8e)(48)	−30	172	. . .	204
6	Fe	Castings	A48	30	F12101	. . .	(2)(8e)(48)	−30	207	. . .	204
7	Fe	Castings	A278	30	F12101	. . .	(2)(8e)(48)	−30	207	. . .	204
8	Fe	Castings	A126	B	F12102	. . .	(2)(8e)(9)(48)	−30	214	. . .	204
9	Fe	Castings	A48	35	F12401	. . .	(2)(8e)(48)	−30	241	. . .	204
10	Fe	Castings	A278	35	F12401	. . .	(2)(8e)(48)	−30	241	. . .	204
11	Fe	Castings	A48	40	F12801	. . .	(2)(8e)(9)(48)	−30	276	. . .	204
12	Fe	Castings	A126	C	F12802	. . .	(2)(8e)(9)(48)	−30	283	. . .	204
13	Fe	Castings	A278	40	F12803	. . .	(2)(8e)(9)(53)	−30	276	. . .	343
14	Fe	Castings	A48	45	F13101	. . .	(2)(8e)(48)	−30	310	. . .	204
15	Fe	Castings	A48	50	F13501	. . .	(2)(8e)(48)	−30	345	. . .	204
16	Fe	Castings	A278	50	F13502	. . .	(2)(8e)(53)	−30	345	. . .	343
17	Fe	Castings	A48	55	F13801	. . .	(2)(8e)(48)	−30	379	. . .	204
18	Fe	Castings	A48	60	F14101	. . .	(2)(8e)(48)	−30	414	. . .	204
19	Fe	Castings	A278	60	F14102	. . .	(2)(8e)(53)	−30	414	. . .	343
20	Fe	Castings	A197	. . .	F22000	. . .	(2)(8e)(9)	−30	276	207	343
21	Fe	Castings	A47	32510	F22200	. . .	(2)(8e)(9)	−30	345	224	343
22	Fe	Castings	A395	60-40-18	F32800	. . .	(2)(8d)(9)	−30	414	276	343
23	Fe	Castings	A571	D-2M	F43010	1	(2)(8d)	−30	448	207	40

Copyright © 2015 by the American Society of Mechanical Engineers.
No reproduction may be made of this material without written consent of ASME.

Table A-1M Basic Allowable Stresses in Tension for Metals (Metric) (14)

Numbers in Parentheses Refer to Notes for Appendix A Tables; Specifications Are ASTM Unless Otherwise Indicated

	Basic Allowable Stress, *S*, MPa, at Metal Temperature, °C [Notes (1) and (4b)]												
Line No.	Min. Temp. to 40	65	100	125	150	175	200	225	250	275	300	325	350
1	*13.8*	*13.8*	*13.8*	*13.8*	*13.8*	*13.8*	*13.8*	*13.8*	...	...	...	...	...
2	*13.8*	*13.8*	*13.8*	*13.8*	*13.8*	*13.8*	*13.8*	*13.8*	...	...	...	...	...
3	*13.8*	*13.8*	*13.8*	*13.8*	*13.8*	*13.8*	*13.8*	*13.8*	...	...	...	...	...
4	*17.2*	*17.2*	*17.2*	*17.2*	*17.2*	*17.2*	*17.2*	*17.2*	...	...	...	...	...
5	*17.2*	*17.2*	*17.2*	*17.2*	*17.2*	*17.2*	*17.2*	*17.2*	...	...	...	...	...
6	*20.7*	*20.7*	*20.7*	*20.7*	*20.7*	*20.7*	*20.7*	*20.7*	...	...	...	...	...
7	*20.7*	*20.7*	*20.7*	*20.7*	*20.7*	*20.7*	*20.7*	*20.7*	...	...	...	...	...
8	*20.7*	*20.7*	*20.7*	*20.7*	*20.7*	*20.7*	*20.7*	*20.7*	...	...	...	...	...
9	*24.1*	*24.1*	*24.1*	*24.1*	*24.1*	*24.1*	*24.1*	*24.1*	...	...	...	...	...
10	*24.1*	*24.1*	*24.1*	*24.1*	*24.1*	*24.1*	*24.1*	*24.1*	...	...	...	...	...
11	*27.6*	*27.6*	*27.6*	*27.6*	*27.6*	*27.6*	*27.6*	*27.6*	...	...	...	...	...
12	*27.6*	*27.6*	*27.6*	*27.6*	*27.6*	*27.6*	*27.6*	*27.6*	...	...	...	...	...
13	*27.6*	*27.6*	*27.6*	*27.6*	*27.6*	*27.6*	*27.6*	*27.6*	*27.6*	*27.6*	*27.6*	*27.6*	*27.6*
14	*31.0*	*31.0*	*31.0*	*31.0*	*31.0*	*31.0*	*31.0*	*31.0*	...	...	...	...	...
15	*34.5*	*34.5*	*34.5*	*34.5*	*34.5*	*34.5*	*34.5*	*34.5*	...	...	...	...	...
16	*34.5*	*34.5*	*34.5*	*34.5*	*34.5*	*34.5*	*34.5*	*34.5*	*34.5*	*34.5*	*34.5*	*34.5*	*34.5*
17	*37.9*	*37.9*	*37.9*	*37.9*	*37.9*	*37.9*	*37.9*	*37.9*	...	...	...	...	...
18	*41.4*	*41.4*	*41.4*	*41.4*	*41.4*	*41.4*	*41.4*	*41.4*	...	...	...	...	...
19	*41.4*	*41.4*	*41.4*	*41.4*	*41.4*	*41.4*	*41.4*	*41.4*	*41.4*	*41.4*	*41.4*	*41.4*	*41.4*
20	*55.2*	*55.2*	*55.2*	*55.2*	*55.2*	*55.2*	*55.2*	*55.2*	*55.2*	*55.2*	*55.2*	*55.2*	*55.2*
21	*68.9*	*68.9*	*68.9*	*68.9*	*68.9*	*68.9*	*68.9*	*68.9*	*68.9*	*68.9*	*68.9*	*68.9*	*68.9*
22	*137*	*133*	*128*	*125*	*122*	*119*	*116*	*112*	*109*	*106*	*103*	*98.0*	*93.5*
23	*138*	...	...	...	...	...	...	...	...	...	...	...	...

Copyright © 2015 by the American Society of Mechanical Engineers.
No reproduction may be made of this material without written consent of ASME.

(14)

Table A-1M Basic Allowable Stresses in Tension for Metals (Metric) (Cont'd)

Numbers in Parentheses Refer to Notes for Appendix A Tables; Specifications Are ASTM Unless Otherwise Indicated

Line No.	Nominal Composition	Product Form	Spec. No.	Type/ Grade	UNS No.	Class/ Cond./ Temper	Size, mm	P-No. (5)	Notes	Min. Temp., °C (6)	Min. Tensile Str., MPa	Min. Yield Str., MPa	Max. Use Temp., °C
1	Carbon steel	Pipe & tube	A134	. . .	. . .	. . .	. . .	1	(2)(8b)(57)	B	310	165	482
2	Carbon steel	Pipe & tube	A672	A45	K01700	. . .	. . .	1	(2)(57)(59)(67)	B	310	165	593
3	Carbon steel	Pipe & tube	API 5L	A25	. . .	. . .	. . .	1	(2)(8a)(77)	−30	310	172	204
4	Carbon steel	Pipe & tube	API 5L	A25	. . .	. . .	. . .	1	(2)(57)(59)(77)	B	310	172	204
5	Carbon steel	Pipe & tube	A179	. . .	K01200	. . .	. . .	1	(2)(57)(59)	−30	324	179	593
6	Carbon steel	Pipe & tube	A53	A	K02504	. . .	. . .	1	(2)(8a)	−5	331	207	204
7	Carbon steel	Pipe & tube	A139	A	. . .	. . .	. . .	1	(2)(8b)	A	331	207	149
8	Carbon steel	Pipe & tube	A587	. . .	K11500	. . .	. . .	1	(2)(57)(59)	−30	331	207	454
9	Carbon steel	Pipe & tube	A53	A	K02504	. . .	. . .	1	(2)(57)(59)	B	331	207	593
10	Carbon steel	Pipe & tube	A106	A	K02501	. . .	. . .	1	(2)(57)	B	331	207	593
11	Carbon steel	Pipe & tube	A135	A	. . .	. . .	. . .	1	(2)(57)(59)	B	331	207	593
12	Carbon steel	Pipe & tube	A369	FPA	K02501	. . .	. . .	1	(2)(57)	B	331	207	593
13	Carbon steel	Pipe & tube	API 5L	A	. . .	. . .	. . .	1	(2)(57)(59)(77)	B	331	207	593
14	Carbon steel	Pipe & tube	A134	. . .	. . .	. . .	. . .	1	(2)(8b)(57)	B	345	186	482
15	Carbon steel	Pipe & tube	A672	A50	K02200	. . .	. . .	1	(2)(57)(59)(67)	B	345	186	593
16	Carbon steel	Pipe & tube	A134	. . .	. . .	. . .	. . .	1	(2)(8b)(57)	A	379	207	482
17	Carbon steel	Pipe & tube	A524	II	K02104	. . .	. . .	1	(2)(57)	−30	379	207	538
18	Carbon steel	Pipe & tube	A333	1	K03008	. . .	. . .	1	(2)(57)(59)	−45	379	207	593
19	Carbon steel	Pipe & tube	A334	1	K03008	. . .	. . .	1	(2)(57)(59)	−45	379	207	593
20	Carbon steel	Pipe & tube	A671	CA55	K02801	. . .	. . .	1	(2)(59)(67)	A	379	207	593
21	Carbon steel	Pipe & tube	A672	A55	K02801	. . .	. . .	1	(2)(57)(59)(67)	A	379	207	593
22	Carbon steel	Pipe & tube	A672	C55	K01800	. . .	. . .	1	(2)(57)(67)	C	379	207	593
23	Carbon steel	Pipe & tube	A671	CC60	K02100	. . .	. . .	1	(2)(57)(67)	C	414	221	538
24	Carbon steel	Pipe & tube	A671	CB60	K02401	. . .	. . .	1	(2)(57)(67)	B	414	221	593
25	Carbon steel	Pipe & tube	A672	B60	K02401	. . .	. . .	1	(2)(57)(67)	B	414	221	593
26	Carbon steel	Pipe & tube	A672	C60	K02100	. . .	. . .	1	(2)(57)(67)	C	414	221	593
27	Carbon steel	Pipe & tube	A139	B	K03003	. . .	. . .	1	(2)(8b)	A	414	241	149
28	Carbon steel	Pipe & tube	A135	B	K03018	. . .	. . .	1	(2)(57)(59)	B	414	241	538
29	Carbon steel	Pipe & tube	A524	I	K02104	. . .	. . .	1	(2)(57)	−30	414	241	538

Copyright © 2015 by the American Society of Mechanical Engineers.
No reproduction may be made of this material without written consent of ASME.

Table A-1M Basic Allowable Stresses in Tension for Metals (Metric) (Cont'd) (14)

Numbers in Parentheses Refer to Notes for Appendix A Tables; Specifications Are ASTM Unless Otherwise Indicated

		Basic Allowable Stress, *S*, MPa, at Metal Temperature, °C [Notes (1) and (4b)]																	
Line No.	Min. Temp. to 40	65	100	150	200	250	300	325	350	375	400	425	450	475	500	525	550	575	600
1	*103*	*103*	101	97.5	94.6	90.8	86.1	83.6	81.1	78.6	**73.3**	**64.0**	**55.8**	**43.9**	**40.7**	...	...	...	...
2	*103*	*103*	101	97.5	94.6	90.8	86.1	83.6	81.1	78.6	**73.3**	**64.0**	**55.8**	**43.9**	**31.7**	**21.4**	**14.2**	**9.40**	**6.89**
3	*103*	*103*	*103*	102	98.5	...	...	...	...	...	...	...	...	...	...	...	...	...	...
4	*103*	*103*	*103*	102	98.5	...	...	...	...	...	...	...	...	...	...	...	...	...	...
5	*108*	*108*	*108*	106	102	98.3	93.3	90.6	87.8	**84.3**	**73.3**	**64.0**	**55.8**	**43.9**	**31.7**	**21.4**	**14.2**	**9.40**	**6.89**
6	*110*	*110*	*110*	*110*	*110*	...	...	...	...	...	...	...	...	...	...	...	...	...	...
7	*110*	*110*	*110*	*110*	...	...	...	...	...	...	...	...	...	...	...	...	...	...	...
8	*110*	*110*	*110*	*110*	*110*	*110*	108	105	**97.0**	**84.3**	**73.3**	**64.0**	**55.8**	**54.5**	...	...	...	...	...
9	*110*	*110*	*110*	*110*	*110*	*110*	108	105	**97.0**	**84.3**	**73.3**	**64.0**	**55.8**	**43.9**	**31.7**	**21.4**	**14.2**	**9.40**	**6.89**
10	*110*	*110*	*110*	*110*	*110*	*110*	108	105	**97.0**	**84.3**	**73.3**	**64.0**	**55.8**	**43.9**	**31.7**	**21.4**	**14.2**	**9.40**	**6.89**
11	*110*	*110*	*110*	*110*	*110*	*110*	108	105	**97.0**	**84.3**	**73.3**	**64.0**	**55.8**	**43.9**	**31.7**	**21.4**	**14.2**	**9.40**	**6.89**
12	*110*	*110*	*110*	*110*	*110*	*110*	108	105	**97.0**	**84.3**	**73.3**	**64.0**	**55.8**	**43.9**	**31.7**	**21.4**	**14.2**	**9.40**	**6.89**
13	*110*	*110*	*110*	*110*	*110*	*110*	108	105	**97.0**	**84.3**	**73.3**	**64.0**	**55.8**	**43.9**	**31.7**	**21.4**	**14.2**	**9.40**	**6.89**
14	*115*	*115*	113	110	106	102	96.9	94.1	91.2	**84.3**	**73.3**	**64.0**	**55.8**	**43.9**	**40.7**	...	...	...	...
15	*115*	*115*	113	110	106	102	96.9	94.1	91.2	**84.3**	**73.3**	**64.0**	**55.8**	**43.9**	**31.7**	**21.4**	**14.2**	**9.40**	**6.89**
16	*126*	*126*	126	122	118	113	108	105	101	98.3	**89.0**	**75.3**	**62.1**	**45.0**	**40.7**	...	...	...	...
17	*126*	*126*	126	122	118	113	108	105	101	98.3	**89.0**	**75.3**	**62.1**	**45.0**	**31.7**	**21.4**	**17.2**	...	...
18	*126*	*126*	126	122	118	113	108	105	101	98.3	**89.0**	**75.3**	**62.1**	**45.0**	**31.7**	**21.4**	**14.2**	**9.40**	**6.89**
19	*126*	*126*	126	122	118	113	108	105	101	98.3	**89.0**	**75.3**	**62.1**	**45.0**	**31.7**	**21.4**	**14.2**	**9.40**	**6.89**
20	*126*	*126*	126	122	118	113	108	105	101	98.3	**89.0**	**75.3**	**62.1**	**45.0**	**31.7**	**21.4**	**14.2**	**9.40**	**6.89**
21	*126*	*126*	126	122	118	113	108	105	101	98.3	**89.0**	**75.3**	**62.1**	**45.0**	**31.7**	**21.4**	**14.2**	**9.40**	**6.89**
22	*126*	*126*	126	122	118	113	108	105	101	98.3	**89.0**	**75.3**	**62.1**	**45.0**	**31.7**	**21.4**	**14.2**	**9.40**	**6.89**
23	*138*	*138*	134	130	126	121	115	111	108	105	**95.1**	**79.5**	**62.6**	**45.0**	**31.7**	**21.4**	**17.2**	...	...
24	*138*	*138*	134	130	126	121	115	111	108	105	**95.1**	**79.5**	**62.6**	**45.0**	**31.7**	**21.4**	**14.2**	**9.40**	**6.89**
25	*138*	*138*	134	130	126	121	115	111	108	105	**95.1**	**79.5**	**62.6**	**45.0**	**31.7**	**21.4**	**14.2**	**9.40**	**6.89**
26	*138*	*138*	134	130	126	121	115	111	108	105	**95.1**	**79.5**	**62.6**	**45.0**	**31.7**	**21.4**	**14.2**	**9.40**	**6.89**
27	*138*	*138*	*138*	*138*	...	...	...	...	...	...	...	...	...	...	...	...	...	...	...
28	*138*	*138*	*138*	*138*	*138*	132	126	122	118	**113**	**95.1**	**79.5**	**62.6**	**45.0**	**31.7**	**21.4**	**17.2**	...	...
29	*138*	*138*	*138*	*138*	*138*	132	126	122	118	**113**	**95.1**	**79.5**	**62.6**	**45.0**	**31.7**	**21.4**	**17.2**	...	...

Copyright © 2015 by the American Society of Mechanical Engineers.
No reproduction may be made of this material without written consent of ASME.

Table A-1M Basic Allowable Stresses in Tension for Metals (Metric) (Cont'd)

Numbers in Parentheses Refer to Notes for Appendix A Tables; Specifications Are ASTM Unless Otherwise Indicated

Line No.	Nominal Composition	Product Form	Spec. No.	Type/ Grade	UNS No.	Class/ Cond./ Temper	Size, mm	P-No. (5)	Notes	Min. Temp., °C (6)	Min. Tensile Str., MPa	Min. Yield Str., MPa	Max. Use Temp., °C
30	Carbon steel	Pipe & tube	A53	B	K03005	. . .	. . .	1	(2)(57)(59)	B	414	241	593
31	Carbon steel	Pipe & tube	A106	B	K03006	. . .	. . .	1	(2)(57)	B	414	241	593
32	Carbon steel	Pipe & tube	A333	6	K03006	. . .	. . .	1	(2)(57)	−45	414	241	593
33	Carbon steel	Pipe & tube	A334	6	K03006	. . .	. . .	1	(2)(57)	−45	414	241	593
34	Carbon steel	Pipe & tube	A369	FPB	K03006	. . .	. . .	1	(2)(57)	−30	414	241	593
35	Carbon steel	Pipe & tube	A381	Y35	. . .	. . .	. . .	1	(2)	A	414	241	593
36	Carbon steel	Pipe & tube	API 5L	B	. . .	. . .	. . .	1	(2)(57)(59)(77)	B	414	241	593
37	Carbon steel	Pipe & tube	A139	C	K03004	. . .	. . .	1	(2)(8b)	A	414	290	149
38	Carbon steel	Pipe & tube	A139	D	K03010	. . .	. . .	1	(2)(8b)	A	414	317	149
39	Carbon steel	Pipe & tube	API 5L	X42	. . .	. . .	. . .	1	(2)(55)(77)	A	414	290	204
40	Carbon steel	Pipe & tube	A381	Y42	. . .	. . .	. . .	1	(2)	A	414	290	204
41	Carbon steel	Pipe & tube	A381	Y48	. . .	. . .	. . .	1	(2)	A	427	331	343
42	Carbon steel	Pipe & tube	API 5L	X46	. . .	. . .	. . .	1	(2)(55)(77)	A	434	317	204
43	Carbon steel	Pipe & tube	A381	Y46	. . .	. . .	. . .	1	(2)	A	434	317	204
44	Carbon steel	Pipe & tube	A381	Y50	. . .	. . .	. . .	1	(2)	A	441	345	343
45	Carbon steel	Pipe & tube	A671	CC65	K02403	. . .	. . .	1	(2)(57)(67)	B	448	241	538
46	Carbon steel	Pipe & tube	A671	CB65	K02800	. . .	. . .	1	(2)(57)(67)	A	448	241	593
47	Carbon steel	Pipe & tube	A672	B65	K02800	. . .	. . .	1	(2)(57)(67)	A	448	241	593
48	Carbon steel	Pipe & tube	A672	C65	K02403	. . .	. . .	1	(2)(57)(67)	B	448	241	593
49	Carbon steel	Pipe & tube	A139	E	K03012	. . .	. . .	1	(2)(8b)	A	455	359	149
50	Carbon steel	Pipe & tube	API 5L	X52	. . .	. . .	. . .	1	(2)(55)(77)	A	455	359	204
51	Carbon steel	Pipe & tube	A381	Y52	. . .	. . .	. . .	1	(2)	A	455	359	204
52	Carbon steel	Pipe & tube	A671	CC70	K02700	. . .	. . .	1	(2)(57)(67)	B	483	262	538
53	Carbon steel	Pipe & tube	A671	CB70	K03101	. . .	. . .	1	(2)(57)(67)	A	483	262	593
54	Carbon steel	Pipe & tube	A672	B70	K03101	. . .	. . .	1	(2)(57)(67)	A	483	262	593
55	Carbon steel	Pipe & tube	A672	C70	K02700	. . .	. . .	1	(2)(57)(67)	B	483	262	593
56	Carbon steel	Pipe & tube	A106	C	K03501	. . .	. . .	1	(2)(57)	B	483	276	427
57	Carbon steel	Pipe & tube	A671	CD70	K12437	. . .	≤ 64	1	(2)(67)	D	483	345	371
58	Carbon steel	Pipe & tube	A672	D70	K12437	. . .	≤ 64	1	(2)(67)	D	483	345	371
59	Carbon steel	Pipe & tube	A691	CMSH-70	K12437	. . .	≤ 64	1	(2)(67)	D	483	345	371

Copyright © 2015 by the American Society of Mechanical Engineers.
No reproduction may be made of this material without written consent of ASME.

Table A-1M Basic Allowable Stresses in Tension for Metals (Metric) (Cont'd) (14)

Numbers in Parentheses Refer to Notes for Appendix A Tables; Specifications Are ASTM Unless Otherwise Indicated

	Basic Allowable Stress, *S*, MPa, at Metal Temperature, °C [Notes (1) and (4b)]																		
Line No.	Min. Temp. to 40	65	100	150	200	250	300	325	350	375	400	425	450	475	500	525	550	575	600
30	*138*	*138*	*138*	*138*	*138*	132	126	122	118	**113**	**95.1**	**79.5**	**62.6**	**45.0**	**31.7**	**21.4**	**14.2**	**9.40**	**6.89**
31	*138*	*138*	*138*	*138*	*138*	132	126	122	118	**113**	**95.1**	**79.5**	**62.6**	**45.0**	**31.7**	**21.4**	**14.2**	**9.40**	**6.89**
32	*138*	*138*	*138*	*138*	*138*	132	126	122	118	**113**	**95.1**	**79.5**	**62.6**	**45.0**	**31.7**	**21.4**	**14.2**	**9.40**	**6.89**
33	*138*	*138*	*138*	*138*	*138*	132	126	122	118	**113**	**95.1**	**79.5**	**62.6**	**45.0**	**31.7**	**21.4**	**14.2**	**9.40**	**6.89**
34	*138*	*138*	*138*	*138*	*138*	132	126	122	118	**113**	**95.1**	**79.5**	**62.6**	**45.0**	**31.7**	**21.4**	**14.2**	**9.40**	**6.89**
35	*138*	*138*	*138*	*138*	*138*	132	126	122	118	**113**	**95.1**	**79.5**	**62.6**	**45.0**	**31.7**	**21.4**	**14.2**	**9.40**	**6.89**
36	*138*	*138*	*138*	*138*	*138*	132	126	122	118	**113**	**95.1**	**79.5**	**62.6**	**45.0**	**31.7**	**21.4**	**14.2**	**9.40**	**6.89**
37	*138*	*138*	*138*	*138*	...	...	...	...	...	...	...	...	...	...	...	...	...	...	...
38	*138*	*138*	*138*	*138*	...	...	...	...	...	...	...	...	...	...	...	...	...	...	...
39	*138*	*138*	*138*	*138*	*138*	...	...	...	...	...	...	...	...	...	...	...	...	...	...
40	*138*	*138*	*138*	*138*	*138*	...	...	...	...	...	...	...	...	...	...	...	...	...	...
41	*142*	*142*	*142*	*142*	*142*	*142*	*142*	*142*	*129*	...	...	...	...	...	...	...	...	...	...
42	*145*	*145*	*145*	*145*	*145*	...	...	...	...	...	...	...	...	...	...	...	...	...	...
43	*145*	*145*	*145*	*145*	*145*	...	...	...	...	...	...	...	...	...	...	...	...	...	...
44	*147*	*147*	*147*	*147*	*147*	*147*	*147*	*147*	*129*	...	...	...	...	...	...	...	...	...	...
45	*149*	*149*	147	142	138	132	126	122	118	**113**	**95.1**	**79.5**	**64.4**	**47.7**	**32.5**	**21.4**	**17.2**	...	...
46	*149*	*149*	147	142	138	132	126	122	118	**113**	**95.1**	**79.5**	**64.4**	**47.7**	**32.5**	**21.4**	**14.2**	**9.40**	**6.89**
47	*149*	*149*	147	142	138	132	126	122	118	**113**	**95.1**	**79.5**	**64.4**	**47.7**	**32.5**	**21.4**	**14.2**	**9.40**	**6.89**
48	*149*	*149*	147	142	138	132	126	122	118	**113**	**95.1**	**79.5**	**64.4**	**47.7**	**32.5**	**21.4**	**14.2**	**9.40**	**6.89**
49	*152*	*152*	*152*	*152*	...	...	...	...	...	...	...	...	...	...	...	...	...	...	...
50	*152*	*152*	*152*	*152*	*152*	...	...	...	...	...	...	...	...	...	...	...	...	...	...
51	*152*	*152*	*152*	*152*	*152*	...	...	...	...	...	...	...	...	...	...	...	...	...	...
52	*161*	*161*	159	154	150	144	136	132	128	**122**	**101**	**83.8**	**66.8**	**50.3**	**33.2**	**21.4**	**17.2**	...	...
53	*161*	*161*	159	154	150	144	136	132	128	**122**	**101**	**83.8**	**66.8**	**50.3**	**33.2**	**21.4**	**14.2**	**9.40**	**6.89**
54	*161*	*161*	159	154	150	144	136	132	128	**122**	**101**	**83.8**	**66.8**	**50.3**	**33.2**	**21.4**	**14.2**	**9.40**	**6.89**
55	*161*	*161*	159	154	150	144	136	132	128	**122**	**101**	**83.8**	**66.8**	**50.3**	**33.2**	**21.4**	**14.2**	**9.40**	**6.89**
56	*161*	*161*	*161*	*161*	158	151	144	139	135	**122**	**101**	**83.8**	**82.7**	...	...	...	...	...	...
57	*161*	*161*	*161*	*157*	*156*	*156*	156	154	**148**	**126**	...	...	...	...	...	...	...	...	...
58	*161*	*161*	*161*	*157*	*156*	*156*	156	154	**148**	**126**	...	...	...	...	...	...	...	...	...
59	*161*	*161*	*161*	*157*	*156*	*156*	156	154	**148**	**126**	...	...	...	...	...	...	...	...	...

Copyright © 2015 by the American Society of Mechanical Engineers.
No reproduction may be made of this material without written consent of ASME.

Table A-1M Basic Allowable Stresses in Tension for Metals (Metric) (Cont'd)

Numbers in Parentheses Refer to Notes for Appendix A Tables; Specifications Are ASTM Unless Otherwise Indicated

Line No.	Nominal Composition	Product Form	Spec. No.	Type/ Grade	UNS No.	Class/ Cond./ Temper	Size, mm	P-No. (5)	Notes	Min. Temp., °C (6)	Min. Tensile Str., MPa	Min. Yield Str., MPa	Max. Use Temp., °C
60	Carbon steel	Pipe & tube	API 5L	X56	...	...	...	1	(2)(51)(55)(71)(77)	A	490	386	204
61	Carbon steel	Pipe & tube	A381	Y56	...	...	...	1	(2)(51)(55)(71)	A	490	386	204
62	Carbon steel	Pipe & tube	A671	CK75	K02803	...	> 25	1	(2)(57)(67)	A	517	276	593
63	Carbon steel	Pipe & tube	A672	N75	K02803	...	> 25	1	(2)(57)(67)	A	517	276	593
64	Carbon steel	Pipe & tube	A691	CMS-75	K02803	...	> 25	1	(2)(57)(67)	A	517	276	593
65	Carbon steel	Pipe & tube	A671	CK75	K02803	...	≤ 25	1	(2)(57)(67)	A	517	290	371
66	Carbon steel	Pipe & tube	A672	N75	K02803	...	≤ 25	1	(2)(57)(67)	A	517	290	371
67	Carbon steel	Pipe & tube	A691	CMS-75	K02803	...	≤ 25	1	(2)(57)(67)	A	517	290	371
68	Carbon steel	Pipe & tube	API 5L	X60	...	...	...	1	(2)(51)(55)(71)(77)	A	517	414	204
69	Carbon steel	Pipe & tube	API 5L	X65	...	...	...	1	(2)(51)(55)(71)(77)	A	531	448	204
70	Carbon steel	Pipe & tube	API 5L	X70	...	...	...	1	(2)(51)(55)(71)(77)	A	565	483	204
71	Carbon steel	Pipe & tube	API 5L	X80	...	...	...	1	(2)(51)(55)(71)(77)	A	621	552	204
72	Carbon steel	Pipe & tube	A381	Y60	...	...	...	1	(2)(51)(71)	A	517	414	204
73	Carbon steel	Pipe	A134	...	...	...	...	1	(2)(8a)(8c)	−30	311	165	204
74	Carbon steel	Pipe	A134	...	...	...	...	1	(2)(8a)(8c)	−30	338	207	204
75	Carbon steel	Pipe	A134	...	...	...	...	1	(2)(8a)(8c)	−30	345	186	149
76	Carbon steel	Pipe	A134	...	...	...	...	1	(2)(8a)(8c)	−30	359	228	204
77	Carbon steel	Pipe	A134	...	...	...	...	1	(2)(8a)(8c)	−30	365	248	204
78	Carbon steel	Pipe	A134	...	...	...	...	1	(2)(8a)(8c)	−30	379	276	204
79	Carbon steel	Pipe	A134	...	...	...	...	1	(2)(8a)(8c)	−30	400	248	204
80	Carbon steel	Pipe	A134	...	...	...	...	1	(2)(8a)(8c)	−30	414	228	149
81	Carbon steel	Pipe	A134	...	...	...	...	1	(2)(8a)(8c)	−30	414	310	204
82	Carbon steel	Pipe	A134	...	...	...	...	1	(2)(8a)(8c)	−30	448	345	204
83	Carbon steel	Plate, bar, shps., sheet	A285	A	K01700	...	...	1	(57)(59)	B	310	165	593
84	Carbon steel	Plate, bar, shps., sheet	A285	B	K02200	...	...	1	(57)(59)	B	345	186	593
85	Carbon steel	Plate, bar, shps., sheet	A516	55	K01800	...	...	1	(57)	C	379	207	454

Copyright © 2015 by the American Society of Mechanical Engineers.
No reproduction may be made of this material without written consent of ASME.

Table A-1M Basic Allowable Stresses in Tension for Metals (Metric) (Cont'd) (14)

Numbers in Parentheses Refer to Notes for Appendix A Tables; Specifications Are ASTM Unless Otherwise Indicated

		Basic Allowable Stress, *S*, MPa, at Metal Temperature, °C [Notes (1) and (4b)]																	
Line No.	Min. Temp. to 40	65	100	150	200	250	300	325	350	375	400	425	450	475	500	525	550	575	600
60	*163*	*163*	*163*	*163*	*163*	...	...	...	...	...	...	...	...	...	...	...	...	...	...
61	*163*	*163*	*163*	*163*	*163*	...	...	...	...	...	...	...	...	...	...	...	...	...	...
62	*172*	*172*	168	163	158	151	144	139	135	**131**	**107**	**88.0**	**67.3**	**50.3**	**33.2**	**21.4**	**14.2**	**9.40**	**6.89**
63	*172*	*172*	168	163	158	151	144	139	135	**131**	**107**	**88.0**	**67.3**	**50.3**	**33.2**	**21.4**	**14.2**	**9.40**	**6.89**
64	*172*	*172*	168	163	158	151	144	139	135	**131**	**107**	**88.0**	**67.3**	**50.3**	**33.2**	**21.4**	**14.2**	**9.40**	**6.89**
65	*172*	*172*	*172*	171	165	159	151	146	142	**131**	...	...	...	...	...	...	...	...	...
66	*172*	*172*	*172*	171	165	159	151	146	142	**131**	...	...	...	...	...	...	...	...	...
67	*172*	*172*	*172*	171	165	159	151	146	142	**131**	...	...	...	...	...	...	...	...	...
68	*172*	*172*	*172*	*172*	*172*	...	...	...	...	...	...	...	...	...	...	...	...	...	...
69	*177*	*177*	*177*	*177*	*177*	...	...	...	...	...	...	...	...	...	...	...	...	...	...
70	*188*	*188*	*188*	*188*	*188*	...	...	...	...	...	...	...	...	...	...	...	...	...	...
71	*207*	*207*	*207*	*207*	*207*	...	...	...	...	...	...	...	...	...	...	...	...	...	...
72	*172*	*172*	*172*	*172*	*172*	...	...	...	...	...	...	...	...	...	...	...	...	...	...
73	*103*	*103*	101	97.5	94.6	...	...	...	...	...	...	...	...	...	...	...	...	...	...
74	*113*	*113*	*113*	*113*	*113*	...	...	...	...	...	...	...	...	...	...	...	...	...	...
75	*115*	*115*	113	110	...	...	...	...	...	...	...	...	...	...	...	...	...	...	...
76	*120*	*120*	*120*	*120*	*120*	...	...	...	...	...	...	...	...	...	...	...	...	...	...
77	*122*	*122*	*122*	*122*	*122*	...	...	...	...	...	...	...	...	...	...	...	...	...	...
78	*126*	*126*	*126*	*126*	*126*	...	...	...	...	...	...	...	...	...	...	...	...	...	...
79	*133*	*133*	*133*	*133*	*133*	...	...	...	...	...	...	...	...	...	...	...	...	...	...
80	*138*	*138*	*138*	134	...	...	...	...	...	...	...	...	...	...	...	...	...	...	...
81	*138*	*138*	*138*	*138*	*138*	...	...	...	...	...	...	...	...	...	...	...	...	...	...
82	*149*	*149*	*149*	*149*	*149*	...	...	...	...	...	...	...	...	...	...	...	...	...	...
83	*103*	*103*	101	97.5	94.6	90.8	86.1	83.6	81.1	78.6	**73.3**	**64.0**	**55.8**	**43.9**	**31.7**	**21.4**	**14.2**	**9.40**	**6.89**
84	*115*	*115*	113	110	106	102	96.9	94.1	91.2	**84.3**	**73.3**	**64.0**	**55.8**	**43.9**	**31.7**	**21.4**	**14.2**	**9.40**	**6.89**
85	*126*	*126*	126	122	118	113	108	105	101	98.3	**89.0**	**75.3**	**62.1**	**60.0**	...	...	...	...	...

Copyright © 2015 by the American Society of Mechanical Engineers.
No reproduction may be made of this material without written consent of ASME.

(14)

Table A-1M Basic Allowable Stresses in Tension for Metals (Metric) (Cont'd)

Numbers in Parentheses Refer to Notes for Appendix A Tables; Specifications Are ASTM Unless Otherwise Indicated

Line No.	Nominal Composition	Product Form	Spec. No.	Type/ Grade	UNS No.	Class/ Cond./ Temper	Size, mm	P-No. (5)	Notes	Min. Temp., °C (6)	Min. Tensile Str., MPa	Min. Yield Str., MPa	Max. Use Temp., °C
86	Carbon steel	Plate, bar, shps., sheet	A285	C	K02801	. . .	. . .	1	(57)(59)	A	379	207	593
87	Carbon steel	Plate, bar, shps., sheet	A516	60	K02100	. . .	. . .	1	(57)	C	414	221	454
88	Carbon steel	Plate, bar, shps., sheet	A515	60	K02401	. . .	. . .	1	(57)	B	414	221	538
89	Carbon steel	Plate, bar, shps., sheet	A696	B	K03200	. . .	. . .	1	(57)	A	415	240	371
90	Carbon steel	Plate, bar, shps., sheet	A516	65	K02403	. . .	. . .	1	(57)	B	448	241	454
91	Carbon steel	Plate, bar, shps., sheet	A515	65	K02800	. . .	. . .	1	(57)	A	448	241	538
92	Carbon steel	Plate, bar, shps., sheet	A516	70	K02700	. . .	. . .	1	(57)	B	483	262	454
93	Carbon steel	Plate, bar, shps., sheet	A515	70	K03101	. . .	. . .	1	(57)	A	483	262	538
94	Carbon steel	Plate, bar, shps., sheet	A696	C	K03200	. . .	. . .	1	(57)	A	485	275	371
95	Carbon steel	Plate, bar, shps., sheet	A537	. . .	K12437	1	≤ 64	1	. . .	D	483	345	371
96	Carbon steel	Plate, bar, shps., sheet	A299	A	K02803	. . .	> 25	1	(57)	A	517	276	593
97	Carbon steel	Plate, bar, shps., sheet	A299	A	K02803	. . .	≤ 25	1	(57)	A	517	290	593
98	Carbon steel	Plate, bar, shps., sheet	A283	A	K01400	. . .	. . .	1	(8c)(57)	A	310	165	399
99	Carbon steel	Plate, bar, shps., sheet	A1011	30	K02502	. . .	. . .	1	(8c)(57)	A	338	207	399
100	Carbon steel	Plate, bar, shps., sheet	A283	B	K01702	. . .	. . .	1	(8c)(57)	A	345	186	399
101	Carbon steel	Plate, bar, shps., sheet	A1011	33	K02502	. . .	. . .	1	(8c)(57)	A	359	228	399
102	Carbon steel	Plate, bar, shps., sheet	A1011	36	K02502	. . .	. . .	1	(8c)(57)	A	365	248	399
103	Carbon steel	Plate, bar, shps., sheet	A283	C	K02401	. . .	. . .	1	(8c)(57)	A	379	207	399
104	Carbon steel	Plate, bar, shps., sheet	A1011	40	K02502	. . .	. . .	1	(8c)(57)	A	379	276	399
105	Carbon steel	Plate, bar, shps., sheet	A36	. . .	K02600	. . .	. . .	1	(8c)	A	400	248	371
106	Carbon steel	Plate, bar, shps., sheet	A283	D	K02702	. . .	. . .	1	(8c)(57)	A	414	228	399
107	Carbon steel	Plate, bar, shps., sheet	A1011	45	K02507	. . .	. . .	1	(8c)(57)	A	414	310	399
108	Carbon steel	Plate, bar, shps., sheet	A1011	50	K02507	. . .	. . .	1	(8c)(57)	A	448	344	399
109	Carbon steel	Plate, bar, shps., sheet	A992	. . .	. . .	. . .	. . .	1	(8c)(57)	A	448	344	427
110	Carbon steel	Forgings & fittings	A350	LF1	K03009	. . .	. . .	1	(2)(9)(57)(59)	−30	414	207	538
111	Carbon steel	Forgings & fittings	A181	. . .	K03502	60	. . .	1	(2)(9)(57)(59)	A	414	207	593
112	Carbon steel	Forgings & fittings	A420	WPL6	K03006	. . .	. . .	1	(2)(57)	−45	414	241	538
113	Carbon steel	Forgings & fittings	A234	WPB	K03006	. . .	. . .	1	(2)(57)(59)	B	414	241	593

Copyright © 2015 by the American Society of Mechanical Engineers.
No reproduction may be made of this material without written consent of ASME.

Table A-1M Basic Allowable Stresses in Tension for Metals (Metric) (Cont'd) (14)

Numbers in Parentheses Refer to Notes for Appendix A Tables; Specifications Are ASTM Unless Otherwise Indicated

	Basic Allowable Stress, *S*, MPa, at Metal Temperature, °C [Notes (1) and (4b)]																		
Line No.	Min. Temp. to 40	65	100	150	200	250	300	325	350	375	400	425	450	475	500	525	550	575	600
86	*126*	*126*	126	122	118	113	108	105	101	98.3	**89.0**	**75.3**	**62.1**	**45.0**	**31.7**	**21.4**	**14.2**	**9.40**	**6.89**
87	*138*	*138*	134	130	126	121	115	111	108	105	**95.1**	**79.5**	**62.6**	**60.0**	...	...	...	...	...
88	*138*	*138*	134	130	126	121	115	111	108	105	**95.1**	**79.5**	**62.6**	**45.0**	**31.7**	**21.4**	**17.2**	...	...
89	*138*	*138*	*138*	*138*	138	132	125	122	118	115	...	...	...	...	...	...	...	...	...
90	*149*	*149*	147	142	138	132	126	122	118	**113**	**95.1**	**79.5**	**64.4**	**62.1**	...	...	...	...	...
91	*149*	*149*	147	142	138	132	126	122	118	**113**	**95.1**	**79.5**	**64.4**	**47.7**	**32.5**	**21.4**	**17.2**	...	...
92	*161*	*161*	159	154	150	144	136	132	128	**122**	**101**	**83.8**	**66.8**	**64.1**	...	...	...	...	...
93	*161*	*161*	159	154	150	144	136	132	128	**122**	**101**	**83.8**	**66.8**	**50.3**	**33.2**	**21.4**	**17.2**	...	...
94	*161*	*161*	*161*	*161*	158	151	144	139	135	131	...	...	...	...	...	...	...	...	...
95	*161*	*161*	*161*	*157*	*156*	*156*	156	154	**148**	**126**	...	...	...	...	...	...	...	...	...
96	*172*	*172*	168	163	158	151	144	139	135	**131**	**107**	**88.0**	**67.3**	**50.3**	**33.2**	**21.4**	**14.2**	**9.40**	**6.89**
97	*172*	*172*	*172*	171	165	159	151	146	142	**131**	**107**	**88.0**	**67.3**	**50.3**	**33.2**	**21.4**	**14.2**	**9.40**	**6.89**
98	*103*	*103*	101	97.5	94.6	90.8	86.1	83.6	81.1	78.6	73.8	...	...	...	...	...	...	...	...
99	*113*	*113*	*113*	*113*	*113*	*113*	108	105	**97.0**	**84.3**	**73.8**	...	...	...	...	...	...	...	...
100	*115*	*115*	113	110	106	102	96.9	94.1	91.2	**84.3**	**73.8**	...	...	...	...	...	...	...	...
101	*120*	*120*	*120*	*120*	*120*	*120*	118	115	**97.0**	**84.3**	**73.8**	...	...	...	...	...	...	...	...
102	*122*	*122*	*122*	*122*	*122*	*122*	*122*	*122*	**97.0**	**84.3**	**73.8**	...	...	...	...	...	...	...	...
103	*126*	*126*	126	122	118	113	108	105	101	98.3	89.6	...	...	...	...	...	...	...	...
104	*126*	*126*	*126*	*126*	*126*	*126*	*126*	*126*	**124**	**105**	**89.6**	...	...	...	...	...	...	...	...
105	*133*	*133*	*133*	*133*	*133*	*133*	129	125	122	108	...	...	...	...	...	...	...	...	...
106	*138*	*138*	*138*	134	130	125	118	115	111	108	95.8	...	...	...	...	...	...	...	...
107	*138*	*138*	*138*	*138*	*138*	*138*	*138*	*138*	**135**	**113**	**95.8**	...	...	...	...	...	...	...	...
108	*149*	*149*	*149*	*149*	*149*	*149*	*149*	*149*	**135**	**113**	**95.8**	...	...	...	...	...	...	...	...
109	142	142	142	142	142	142	142	142	**121**	**108**	**90.3**	**75.6**	**59.9**	...	...	...	...	...	...
110	*138*	130	126	122	118	113	108	105	101	98.3	**95.1**	**79.5**	**62.6**	**45.0**	**31.7**	**21.4**	**17.2**	...	...
111	*138*	130	126	122	118	113	108	105	101	98.3	**95.1**	**79.5**	**62.6**	**45.0**	**31.7**	**21.4**	**14.2**	**9.40**	**6.89**
112	*138*	*138*	*138*	*138*	*138*	132	126	122	118	**113**	**95.1**	**79.5**	**62.6**	**45.0**	**31.7**	**21.4**	**17.2**	...	...
113	*138*	*138*	*138*	*138*	*138*	132	126	122	118	**113**	**95.1**	**79.5**	**62.6**	**45.0**	**31.7**	**21.4**	**14.2**	**9.40**	**6.89**

Copyright © 2015 by the American Society of Mechanical Engineers.
No reproduction may be made of this material without written consent of ASME.

Table A-1M Basic Allowable Stresses in Tension for Metals (Metric) (Cont'd)

Numbers in Parentheses Refer to Notes for Appendix A Tables; Specifications Are ASTM Unless Otherwise Indicated

Line No.	Nominal Composition	Product Form	Spec. No.	Type/ Grade	UNS No.	Class/ Cond./ Temper	Size, mm	P-No. (5)	Notes	Min. Temp., °C (6)	Min. Tensile Str., MPa	Min. Yield Str., MPa	Max. Use Temp., °C
114	Carbon steel	Forgings & fittings	A350	LF2	K03011	1	. . .	1	(2)(9)(57)	−45	483	248	538
115	Carbon steel	Forgings & fittings	A350	LF2	K03011	2	. . .	1	(2)(9)(57)	−20	483	248	538
116	Carbon steel	Forgings & fittings	A105	. . .	K03504	. . .	. . .	1	(2)(9)(57)(59)	−30	483	248	593
117	Carbon steel	Forgings & fittings	A181	. . .	K03502	70	. . .	1	(2)(9)(57)(59)	A	483	248	593
118	Carbon steel	Forgings & fittings	A234	WPC	K03501	. . .	. . .	1	(2)(57)(59)	B	483	276	427
119	Carbon steel	Castings	A216	WCA	J02502	. . .	. . .	1	(2)(57)	−30	414	207	593
120	Carbon steel	Castings	A352	LCB	J03003	. . .	. . .	1	(2)(9)(57)	−45	448	241	593
121	Carbon steel	Castings	A352	LCC	J02505	. . .	. . .	1	(2)(9)	−45	483	276	371
122	Carbon steel	Castings	A216	WCB	J03002	. . .	. . .	1	(2)(9)(57)	−30	483	248	593
123	Carbon steel	Castings	A216	WCC	J02503	. . .	. . .	1	(2)(9)(57)	−30	483	276	538

Copyright © 2015 by the American Society of Mechanical Engineers.
No reproduction may be made of this material without written consent of ASME.

Table A-1M Basic Allowable Stresses in Tension for Metals (Metric) (Cont'd) (14)

Numbers in Parentheses Refer to Notes for Appendix A Tables; Specifications Are ASTM Unless Otherwise Indicated

	Basic Allowable Stress, *S*, MPa, at Metal Temperature, °C [Notes (1) and (4b)]																		
Line No.	Min. Temp. to 40	65	100	150	200	250	300	325	350	375	400	425	450	475	500	525	550	575	600
114	*161*	156	151	146	142	136	129	125	122	118	**101**	**83.8**	**66.8**	**50.3**	**33.2**	**21.4**	**17.2**	. . .	. . .
115	*161*	156	151	146	142	136	129	125	122	118	**101**	**83.8**	**66.8**	**50.3**	**33.2**	**21.4**	**17.2**	. . .	. . .
116	*161*	156	151	146	142	136	129	125	122	118	**101**	**83.8**	**66.8**	**50.3**	**33.2**	**21.4**	**14.2**	**9.40**	**6.89**
117	*161*	156	151	146	142	136	129	125	122	118	**101**	**83.8**	**66.8**	**50.3**	**33.2**	**21.4**	**14.2**	**9.40**	**6.89**
118	*161*	*161*	*161*	*161*	158	151	144	139	135	**122**	**101**	**83.8**	**82.7**	. . .	. . .	. . .	. . .	. . .	. . .
119	*138*	130	126	122	118	113	108	105	101	98.3	**95.1**	**79.5**	**62.6**	**45.0**	**31.7**	**21.4**	**14.2**	**9.40**	**6.89**
120	*149*	*149*	147	142	138	132	126	122	118	**113**	**95.1**	**79.5**	**64.4**	**47.7**	**32.5**	**21.4**	**14.2**	**9.40**	**6.89**
121	*161*	*161*	161	161	158	151	139	137	136	132	. . .	. . .	. . .	. . .	. . .	. . .	. . .	. . .	. . .
122	*161*	156	151	146	142	136	129	125	122	118	**101**	**83.8**	**66.8**	**50.3**	**33.2**	**21.4**	**14.2**	**9.40**	**6.89**
123	*161*	*161*	*161*	*161*	158	151	144	139	135	**122**	**101**	**83.8**	**66.8**	**50.3**	**33.2**	**21.4**	**17.2**	. . .	. . .

Copyright © 2015 by the American Society of Mechanical Engineers.
No reproduction may be made of this material without written consent of ASME.

Table A-1M Basic Allowable Stresses in Tension for Metals (Metric) (Cont'd)

Numbers in Parentheses Refer to Notes for Appendix A Tables; Specifications Are ASTM Unless Otherwise Indicated

Line No.	Nominal Composition	Product Form	Spec. No.	Type/ Grade	UNS No.	Class/ Condition/ Temper	Size, mm	P-No. (5)	Notes	Min. Temp., °C (6)	Min. Tensile Str., MPa	Min. Yield Str., MPa	Max. Use Temp., °C
1	½Cr–½Mo	Pipe	A335	P2	K11547	...	...	3	(2)	−30	379	207	538
2	½Cr–½Mo	Pipe	A691	½CR	K12143	...	...	3	(2)(11)(67)	−30	379	228	538
3	C–½Mo	Pipe	A335	P1	K11522	...	...	3	(2)(58)	−30	379	207	593
4	C–½Mo	Pipe	A369	FP1	K11522	...	...	3	(2)(58)	−30	379	207	593
5	½Cr–½Mo	Pipe	A369	FP2	K11547	...	...	3	(2)	−30	379	207	593
6	1Cr–½Mo	Pipe	A691	1CR	K11757	...	...	4	(2)(11)(67)	−30	379	228	649
7	½Cr–½Mo	Pipe	A426	CP2	J11547	...	...	3	(2)(10)	−30	414	207	593
8	1½Si–½Mo	Pipe	A335	P15	K11578	...	...	3	(2)	−30	414	207	593
9	1½Si–½Mo	Pipe	A426	CP15	J11522	...	...	3	(2)(10)	−30	414	207	593
10	1Cr–½Mo	Pipe	A426	CP12	J11562	...	...	4	(2)(10)	−30	414	207	649
11	5Cr–½Mo–1½Si	Pipe	A426	CP5b	J51545	...	...	5B	(2)(10)	−30	414	207	649
12	3Cr–Mo	Pipe	A426	CP21	J31545	...	...	5A	(2)(10)	−30	414	207	649
13	¾Cr–¾Ni–Cu–Al	Pipe	A333	4	K11267	...	...	4	(2)	−100	414	241	40
14	2Cr–½Mo	Pipe	A369	FP3b	K21509	...	...	4	(2)	−30	414	207	649
15	1Cr–½Mo	Pipe	A335	P12	K11562	...	...	4	(2)	−30	414	221	649
16	1Cr–½Mo	Pipe	A369	FP12	K11562	...	...	4	(2)	−30	414	221	649
17	1¼Cr–½Mo	Pipe	A335	P11	K11597	...	...	4	(2)	−30	414	207	649
18	1¼Cr–½Mo	Pipe	A369	FP11	K11597	...	...	4	(2)	−30	414	207	649
19	1¼Cr–½Mo	Pipe	A691	1¼CR	K11789	...	...	4	(2)(11)(67)	−30	414	241	649
20	5Cr–½Mo	Pipe	A691	5CR	K41545	...	...	5B	(2)(11)(67)	−30	414	207	649
21	5Cr–½Mo	Pipe	A335	P5	K41545	...	...	5B	(2)	−30	414	207	649
22	5Cr–½Mo–Si	Pipe	A335	P5b	K51545	...	...	5B	(2)	−30	414	207	649
23	5Cr–½Mo–Ti	Pipe	A335	P5c	K41245	...	...	5B	(2)	−30	414	207	649
24	5Cr–½Mo	Pipe	A369	FP5	K41545	...	...	5B	(2)	−30	414	207	649
25	9Cr–1Mo	Pipe	A335	P9	K90941	...	...	5B	(2)	−30	414	207	649
26	9Cr–1Mo	Pipe	A369	FP9	K90941	...	...	5B	(2)	−30	414	207	649
27	9Cr–1Mo	Pipe	A691	9CR	K90941	...	...	5B	(2)	−30	414	207	649
28	3Cr–1Mo	Pipe	A335	P21	K31545	...	...	5A	(2)	−30	414	207	649
29	3Cr–1Mo	Pipe	A369	FP21	K31545	...	...	5A	(2)	−30	414	207	649
30	3Cr–1Mo	Pipe	A691	3CR	K31545	...	...	5A	(2)(11)(67)	−30	414	207	649

Copyright © 2015 by the American Society of Mechanical Engineers.
No reproduction may be made of this material without written consent of ASME.

Table A-1M Basic Allowable Stresses in Tension for Metals (Metric) (Cont'd) (14)

Numbers in Parentheses Refer to Notes for Appendix A Tables; Specifications Are ASTM Unless Otherwise Indicated

		Basic Allowable Stress, *S*, MPa, at Metal Temperature, °C [Notes (1) and (4b)]																							
Line No.	Min. Temp. to 40	65	100	125	150	175	200	225	250	275	300	325	350	375	400	425	450	475	500	525	550	575	600	625	650
1	*126*	*126*	*126*	*126*	124	122	120	119	117	115	114	112	110	108	106	103	100	97.1	**74.4**	**49.9**	**40.7**	...	...	...	...
2	*126*	*126*	*126*	*126*	*126*	*126*	*126*	*126*	*126*	*126*	125	123	121	119	116	114	110	107	**74.4**	**49.9**	**40.7**	...	...	...	...
3	*126*	*126*	*126*	*126*	124	122	120	119	117	115	114	112	110	108	106	103	100	97.1	**68.0**	**42.3**	**30.5**	**23.2**	**16.5**	...	...
4	*126*	*126*	*126*	*126*	124	122	120	119	117	115	114	112	110	108	106	103	100	97.1	**68.0**	**42.3**	**30.5**	**23.2**	**16.5**	...	...
5	*126*	*126*	*126*	*126*	124	122	120	119	117	115	114	112	110	108	106	103	100	97.1	**93.5**	**49.9**	**34.7**	**23.9**	**17.2**	...	...
6	*126*	*126*	*123*	*122*	*122*	*122*	*122*	121	120	118	116	115	114	112	110	109	106	104	**92.1**	**61.1**	**40.4**	**26.4**	**17.4**	**11.6**	**7.58**
7	*138*	133	129	126	124	122	120	119	117	115	114	112	110	108	106	103	100	97.1	**74.4**	**49.9**	**34.3**	**23.2**	**16.5**	...	...
8	*138*	133	129	127	125	124	122	121	120	118	117	115	114	112	110	107	103	**88.4**	**74.7**	**53.7**	**35.6**	**23.2**	**16.5**	...	...
9	*138*	133	129	127	125	124	122	121	120	118	117	115	114	112	110	107	103	**88.4**	**74.7**	**53.7**	**35.6**	**23.2**	**16.5**	...	...
10	*138*	129	124	120	117	115	112	110	109	107	106	105	103	102	100	98.7	96.8	94.6	92.0	**61.1**	**40.4**	**26.4**	**17.4**	**11.6**	**7.58**
11	*138*	129	124	122	120	119	119	118	118	117	117	116	114	112	110	106	103	**80.6**	**61.7**	**46.4**	**34.7**	**25.5**	**17.8**	**11.4**	**6.89**
12	*138*	132	128	126	125	124	124	124	124	124	124	124	124	124	123	122	121	**89.2**	**68.8**	**54.2**	**43.4**	**34.0**	**25.1**	**17.1**	**10.3**
13	*138*	...	...	...	...	...	...	...	...	...	...	...	...	...	...	...	...	...	...	...	...	...	...	...	...
14	*138*	132	128	126	125	124	124	124	124	124	124	124	124	124	123	122	121	118	**74.7**	**53.3**	**36.0**	**24.6**	**15.5**	**9.21**	**6.89**
15	*138*	*138*	132	128	125	122	120	118	116	114	113	112	110	109	107	105	103	101	**92.1**	**61.1**	**40.4**	**26.4**	**17.4**	**11.6**	**7.58**
16	*138*	*138*	132	128	125	122	120	118	116	114	113	112	110	109	107	105	103	101	**92.1**	**61.1**	**40.4**	**26.4**	**17.4**	**11.6**	**7.58**
17	*138*	131	126	124	121	119	116	115	113	111	109	107	106	104	102	99.6	97.2	94.5	**73.7**	**52.0**	**36.3**	**25.2**	**17.6**	**12.3**	**8.27**
18	*138*	131	126	124	121	119	116	115	113	111	109	107	106	104	102	99.6	97.2	94.5	**73.7**	**52.0**	**36.3**	**25.2**	**17.6**	**12.3**	**8.27**
19	*138*	*138*	*138*	*138*	*138*	*138*	136	134	131	129	127	125	123	121	119	116	113	**104**	**73.7**	**52.0**	**36.3**	**25.2**	**17.6**	**12.3**	**8.27**
20	*138*	129	124	122	120	119	119	118	118	117	117	116	114	112	110	106	103	**80.6**	**61.7**	**46.4**	**34.7**	**25.5**	**17.8**	**11.4**	**6.89**
21	*138*	129	124	122	120	119	119	118	118	117	117	116	114	112	110	106	103	**80.6**	**61.7**	**46.4**	**34.7**	**25.5**	**17.8**	**11.4**	**6.89**
22	*138*	129	124	122	120	119	119	118	118	117	117	116	114	112	110	106	103	**80.6**	**61.7**	**46.4**	**34.7**	**25.5**	**17.8**	**11.4**	**6.89**
23	*138*	129	124	122	120	119	119	118	118	117	117	116	114	112	110	106	103	**80.6**	**61.7**	**46.4**	**34.7**	**25.5**	**17.8**	**11.4**	**6.89**
24	*138*	129	124	122	120	119	119	118	118	117	117	116	114	112	110	106	103	**80.6**	**61.7**	**46.4**	**34.7**	**25.5**	**17.8**	**11.4**	**6.89**
25	*138*	129	124	122	120	119	119	118	118	117	117	116	114	112	110	106	103	98.3	**83.2**	**60.2**	**42.9**	**29.9**	**20.6**	**14.4**	**10.3**
26	*138*	129	124	122	120	119	119	118	118	117	117	116	114	112	110	106	103	98.3	**83.2**	**60.2**	**42.9**	**29.9**	**20.6**	**14.4**	**10.3**
27	*138*	129	124	122	120	119	119	118	118	117	117	116	114	112	110	106	103	98.3	**83.2**	**60.2**	**42.9**	**29.9**	**20.6**	**14.4**	**10.3**
28	*138*	132	128	126	125	124	124	124	124	124	124	124	124	124	123	122	121	**89.2**	**68.8**	**54.2**	**43.4**	**34.0**	**25.1**	**17.1**	**10.3**
29	*138*	132	128	126	125	124	124	124	124	124	124	124	124	124	123	122	121	**89.2**	**68.8**	**54.2**	**43.4**	**34.0**	**25.1**	**17.1**	**10.3**
30	*138*	132	128	126	125	124	124	124	124	124	124	124	124	124	123	122	121	**89.2**	**68.8**	**54.2**	**43.4**	**34.0**	**25.1**	**17.1**	**10.3**

Copyright © 2015 by the American Society of Mechanical Engineers.
No reproduction may be made of this material without written consent of ASME.

Table A-1M Basic Allowable Stresses in Tension for Metals (Metric) (Cont'd)

Numbers in Parentheses Refer to Notes for Appendix A Tables; Specifications Are ASTM Unless Otherwise Indicated

Line No.	Nominal Composition	Product Form	Spec. No.	Type/ Grade	UNS No.	Class/ Condition/ Temper	Size, mm	P-No. (5)	Notes	Min. Temp., °C (6)	Min. Tensile Str., MPa	Min. Yield Str., MPa	Max. Use Temp., °C
31	2¼Cr–1Mo	Pipe	A691	2¼CR	K21590	...	...	5A	(2)(11)(67)(72)(75)	−30	414	207	649
32	2¼Cr–1Mo	Pipe	A369	FP22	K21590	...	...	5A	(2)(72)(75)	−30	414	207	649
33	2¼Cr–1Mo	Pipe	A335	P22	K21590	...	...	5A	(2)(72)(75)	−30	414	207	649
34	2Ni–1Cu	Pipe	A333	9	K22035	...	...	9A	(2)	−75	434	317	40
35	2Ni–1Cu	Pipe	A334	9	K22035	...	...	9A	(2)	−75	434	317	40
36	2¼Ni	Pipe	A333	7	K21903	...	...	9A	(2)	−75	448	241	593
37	2¼Ni	Pipe	A334	7	K21903	...	...	9A	(2)	−75	448	241	593
38	3½Ni	Pipe	A333	3	K31918	...	...	9B	(2)	−100	448	241	593
39	3½Ni	Pipe	A334	3	K31918	...	...	9B	(2)	−100	448	241	593
40	C–½Mo	Pipe	A426	CP1	J12521	...	...	3	(2)(10)(58)	−30	448	241	593
41	C–Mo	Pipe	A672	L65	K11820	...	...	3	(2)(11)(58)(67)	−30	448	255	593
42	C–Mo	Pipe	A691	CM65	K11820	...	...	3	(2)(11)(58)(67)	−30	448	255	593
43	2¼Ni	Pipe	A671	CF70	K22103	...	...	9A	(2)(11)(65)(67)	−30	483	276	40
44	3½Ni	Pipe	A671	CF71	K32018	...	...	9B	(2)(11)(65)(67)	−30	483	276	40
45	C–Mo	Pipe	A672	L70	K12020	...	...	3	(2)(11)(58)(67)	−30	483	276	593
46	C–Mo	Pipe	A691	CM70	K12020	...	...	3	(2)(11)(58)(67)	−30	483	276	593
47	1¼Cr–½Mo	Pipe	A426	CP11	J12072	...	...	4	(2)(10)	−30	483	276	649
48	2¼Cr–1Mo	Pipe	A426	CP22	J21890	...	...	5A	(2)(10)(72)	−30	483	276	649
49	C–Mo	Pipe	A672	L75	K12320	...	...	3	(2)(11)(58)(67)	−30	517	296	593
50	C–Mo	Pipe	A691	CM75	K12320	...	...	3	(2)(11)(58)(67)	−30	517	296	593
51	9Cr–1Mo–V	Pipe	A335	P91	K90901	...	≤ 75	15E	(2)	−30	586	414	649
52	9Cr–1Mo–V	Pipe	A691	P91	K90901	...	≤ 75	15E	(2)	−30	586	414	649
53	5Cr–½Mo	Pipe	A426	CP5	J42045	...	...	5B	(2)(10)	−30	621	414	649
54	9Cr–1Mo	Pipe	A426	CP9	J82090	...	...	5B	(2)(10)	−30	621	414	649
55	9Ni	Pipe	A333	8	K81340	...	...	11A	(2)(47)	−195	689	517	93
56	9Ni	Pipe	A334	8	K81340	...	...	11A	(2)	−195	689	517	93
57	½Cr–½Mo	Plate	A387	2	K12143	1	...	3	...	−30	379	228	538
58	1Cr–½Mo	Plate	A387	12	K11757	1	...	4	...	−30	379	228	649
59	9Cr–1Mo	Plate	A387	9	K90941	1	...	5	...	−30	414	207	649

Copyright © 2015 by the American Society of Mechanical Engineers.
No reproduction may be made of this material without written consent of ASME.

Table A-1M Basic Allowable Stresses in Tension for Metals (Metric) (Cont'd) (14)

Numbers in Parentheses Refer to Notes for Appendix A Tables; Specifications Are ASTM Unless Otherwise Indicated

		Basic Allowable Stress, *S*, MPa, at Metal Temperature, °C [Notes (1) and (4b)]																							
Line No.	Min. Temp. to 40	65	100	125	150	175	200	225	250	275	300	325	350	375	400	425	450	475	500	525	550	575	600	625	650
31	*138*	132	128	126	125	124	124	124	124	124	124	124	124	124	123	122	121	**99.6**	**80.9**	**63.3**	**47.5**	**34.2**	**23.5**	**15.3**	**9.65**
32	*138*	132	128	126	125	124	124	124	124	124	124	124	124	124	123	122	121	**99.6**	**80.9**	**63.3**	**47.5**	**34.2**	**23.5**	**15.3**	**9.65**
33	*138*	132	128	126	125	124	124	124	124	124	124	124	124	124	123	122	121	**99.6**	**80.9**	**63.3**	**47.5**	**34.2**	**23.5**	**15.3**	**9.65**
34	*145*	...	...	...	...	...	...	...	...	...	...	...	...	...	...	...	...	...	...	...	...	...	...	...	...
35	*145*	...	...	...	...	...	...	...	...	...	...	...	...	...	...	...	...	...	...	...	...	...	...	...	...
36	*149*	*149*	147	144	142	140	138	135	132	128	124	119	113	107	**95.1**	**79.5**	**64.4**	**48.8**	**35.4**	**22.6**	**14.2**	**9.40**	**6.89**	...	...
37	*149*	*149*	147	144	142	140	138	135	132	128	124	119	113	107	**95.1**	**79.5**	**64.4**	**48.8**	**35.4**	**22.6**	**14.2**	**9.40**	**6.89**	...	...
38	*149*	*149*	147	144	142	140	138	135	132	128	124	119	113	107	**95.1**	**79.5**	**64.4**	**48.8**	**35.4**	**22.6**	**14.2**	**9.48**	**7.06**	...	...
39	*149*	*149*	147	144	142	140	138	135	132	128	124	119	113	107	**95.1**	**79.5**	**64.4**	**48.8**	**35.4**	**22.6**	**14.2**	**9.48**	**7.06**	...	...
40	*149*	*149*	*149*	148	145	143	140	138	137	135	133	131	129	126	123	120	117	**109**	**68.0**	**42.3**	**30.5**	**23.2**	**16.5**	...	...
41	*149*	*149*	*149*	*149*	*149*	*149*	148	146	144	142	140	138	136	133	131	127	124	**109**	**68.0**	**42.3**	**30.5**	**23.2**	**16.5**	...	...
42	*149*	*149*	*149*	*149*	*149*	*149*	148	146	144	142	140	138	136	133	131	127	124	**109**	**68.0**	**42.3**	**30.5**	**23.2**	**16.5**	...	...
43	*161*	...	...	...	...	...	...	...	...	...	...	...	...	...	...	...	...	...	...	...	...	...	...	...	...
44	*161*	...	...	...	...	...	...	...	...	...	...	...	...	...	...	...	...	...	...	...	...	...	...	...	...
45	*161*	*161*	*161*	*161*	*161*	*161*	161	158	156	154	152	149	147	144	141	138	134	**109**	**68.0**	**42.3**	**30.5**	**23.2**	**16.5**	...	...
46	*161*	*161*	*161*	*161*	*161*	*161*	161	158	156	154	152	149	147	144	141	138	134	**109**	**68.0**	**42.3**	**30.5**	**23.2**	**16.5**	...	...
47	*161*	*161*	*161*	*161*	*161*	158	155	153	150	148	146	143	141	138	136	133	130	**104**	**73.7**	**52.0**	**36.3**	**25.2**	**17.6**	**12.3**	**8.27**
48	*161*	*161*	*160*	*157*	*156*	*156*	*156*	*156*	*156*	*156*	*156*	*156*	*156*	*156*	*156*	*156*	*156*	**119**	**88.4**	**64.0**	**44.6**	**30.0**	**19.7**	**12.8**	**8.27**
49	*172*	*172*	*172*	*172*	*172*	*172*	*172*	170	168	165	163	161	158	155	152	148	144	**109**	**68.0**	**42.3**	**30.5**	**23.2**	**16.5**	...	...
50	*172*	*172*	*172*	*172*	*172*	*172*	*172*	170	168	165	163	161	158	155	152	148	144	**109**	**68.0**	**42.3**	**30.5**	**23.2**	**16.5**	...	...
51	*195*	*195*	*195*	*195*	*195*	*195*	*195*	*195*	*194*	*193*	*192*	*190*	*187*	*183*	*178*	*172*	*165*	*156*	*147*	*137*	**115**	**87.0**	**64.7**	**45.1**	**29.6**
52	*195*	*195*	*195*	*195*	*195*	*195*	*195*	*195*	*194*	*193*	*192*	*190*	*187*	*183*	*178*	*172*	*165*	*156*	*147*	*137*	**115**	**87.0**	**64.7**	**45.1**	**29.6**
53	*207*	*207*	*205*	*202*	*200*	*199*	*199*	*199*	*198*	*198*	*196*	*194*	*191*	*187*	*182*	*176*	*169*	**80.6**	**61.7**	**46.4**	**34.7**	**25.5**	**17.8**	**11.4**	**6.89**
54	*207*	*207*	*205*	*202*	*200*	*199*	*199*	*199*	*198*	*198*	*196*	*194*	*191*	*187*	*182*	*176*	*169*	*160*	**87.5**	**61.2**	**42.9**	**29.9**	**20.6**	**14.4**	**10.3**
55	*230*	*230*	*230*	...	...	...	...	...	...	...	...	...	...	...	...	...	...	...	...	...	...	...	...	...	...
56	*230*	*230*	*230*	...	...	...	...	...	...	...	...	...	...	...	...	...	...	...	...	...	...	...	...	...	...
57	*126*	*126*	*126*	*126*	*126*	*126*	*126*	*126*	*126*	*126*	125	123	121	119	116	114	110	107	**74.4**	**49.9**	**40.7**	...	...	...	...
58	*126*	*126*	*123*	*122*	*122*	*122*	*122*	121	120	118	116	115	114	112	110	109	106	104	**92.1**	**61.1**	**40.4**	**26.4**	**17.4**	**11.6**	**7.58**
59	*138*	129	124	122	120	119	119	118	118	117	117	116	114	112	110	106	103	98.3	**83.2**	**60.2**	**42.9**	**29.9**	**20.6**	**14.4**	**10.3**

Copyright © 2015 by the American Society of Mechanical Engineers.
No reproduction may be made of this material without written consent of ASME.

(14)

Table A-1M Basic Allowable Stresses in Tension for Metals (Metric) (Cont'd)

Numbers in Parentheses Refer to Notes for Appendix A Tables; Specifications Are ASTM Unless Otherwise Indicated

Line No.	Nominal Composition	Product Form	Spec. No.	Type/ Grade	UNS No.	Class/ Condition/ Temper	Size, mm	P-No. (5)	Notes	Min. Temp., °C (6)	Min. Tensile Str., MPa	Min. Yield Str., MPa	Max. Use Temp., °C
60	1¼Cr–½Mo	Plate	A387	11	K11789	1	. . .	4	. . .	−30	414	241	649
61	5Cr–½Mo	Plate	A387	5	K41545	1	. . .	5B	. . .	−30	414	207	649
62	3Cr–1Mo	Plate	A387	21	K31545	1	. . .	5A	. . .	−30	414	207	649
63	2¼Cr–1Mo	Plate	A387	22	K21590	1	. . .	5A	(72)	−30	414	207	649
64	2¼Ni	Plate	A203	A	K21703	. . .	. . .	9A	(12)(65)	−30	448	255	538
65	3½Ni	Plate	A203	D	K31718	. . .	. . .	9B	(12)(65)	−30	448	255	538
66	C–½Mo	Plate	A204	A	K11820	. . .	. . .	3	(58)	−30	448	255	593
67	1Cr–½Mo	Plate	A387	12	K11757	2	. . .	4	. . .	−30	448	276	649
68	2¼Ni	Plate	A203	B	K22103	. . .	. . .	9A	(12)(65)	−30	483	276	538
69	3½Ni	Plate	A203	E	K32018	. . .	. . .	9B	(12)(65)	−30	483	276	538
70	½Cr–½Mo	Plate	A387	2	K12143	2	. . .	3	. . .	−30	483	310	538
71	C–½Mo	Plate	A204	B	K12020	. . .	. . .	3	(58)	−30	483	276	593
72	Cr–Mn–Si	Plate	A202	A	K11742	. . .	. . .	4	. . .	−30	517	310	538
73	Mn–Mo	Plate	A302	A	K12021	. . .	. . .	3	. . .	−30	517	310	538
74	C–½Mo	Plate	A204	C	K12320	. . .	. . .	3	(58)	−30	517	296	593
75	1¼Cr–½Mo	Plate	A387	11	K11789	2	. . .	4	. . .	−30	517	310	649
76	5Cr–½Mo	Plate	A387	5	K41545	2	. . .	5B	. . .	−30	517	310	649
77	3Cr–½Mo	Plate	A387	21	K31545	2	. . .	5A	. . .	−30	517	310	649
78	2¼Cr–1Mo	Plate	A387	22	K21590	2	. . .	5A	(72)	−30	517	310	649
79	Mn–Mo	Plate	A302	B	K12022	. . .	. . .	3	. . .	−30	552	345	538
80	Mn–Mo–Ni	Plate	A302	C	K12039	. . .	. . .	3	. . .	−30	552	345	538
81	Mn–Mo–Ni	Plate	A302	D	K12054	. . .	. . .	3	. . .	−30	552	345	538
82	Cr–Mn–Si	Plate	A202	B	K12542	. . .	. . .	4	. . .	−30	586	324	538
83	9Cr–1Mo–V	Plate	A387	91	K90901	2	≤ 75	15E	. . .	−30	586	414	649
84	8Ni	Plate	A553	II	K71340	. . .	. . .	11A	(47)	−170	689	586	40
85	5Ni	Plate	A645	A	K41583	. . .	. . .	11A	. . .	−170	655	448	93
86	9Ni	Plate	A553	I	K81340	. . .	. . .	11A	(47)	−195	689	586	93
87	9Ni	Plate	A353	. . .	K81340	. . .	. . .	11A	(47)	−195	689	517	93
88	C–½Mo	Forg. & ftg.	A234	WP1	K12821	. . .	. . .	3	(2)(58)	−30	379	207	593
89	1Cr–½Mo	Forg. & ftg.	A182	F12	K11562	1	. . .	4	(2)(9)	−30	414	221	649
90	1Cr–½Mo	Forg. & ftg.	A234	WP12	K12062	1	. . .	4	(2)	−30	414	221	649

Copyright © 2015 by the American Society of Mechanical Engineers.
No reproduction may be made of this material without written consent of ASME.

Table A-1M Basic Allowable Stresses in Tension for Metals (Metric) (Cont'd) (14)

Numbers in Parentheses Refer to Notes for Appendix A Tables; Specifications Are ASTM Unless Otherwise Indicated

		Basic Allowable Stress, *S*, MPa, at Metal Temperature, °C [Notes (1) and (4b)]																							
Line No.	Min. Temp. to 40	65	100	125	150	175	200	225	250	275	300	325	350	375	400	425	450	475	500	525	550	575	600	625	650
60	*138*	*138*	*138*	*138*	*138*	*138*	136	134	131	129	127	125	123	121	119	116	113	**104**	**73.7**	**52.0**	**36.3**	**25.2**	**17.6**	**12.3**	**8.27**
61	*138*	129	124	122	120	119	119	118	118	117	117	116	114	112	110	106	103	**80.6**	**61.7**	**46.4**	**34.7**	**25.5**	**17.8**	**11.4**	**6.89**
62	*138*	130	126	123	121	119	117	116	115	114	112	111	110	109	107	105	103	**89.2**	**68.8**	**54.2**	**43.4**	**34.0**	**25.1**	**17.1**	**10.3**
63	*138*	132	128	126	125	124	124	124	124	124	124	124	124	124	123	122	121	**99.6**	**80.9**	**63.3**	**47.5**	**34.2**	**23.5**	**15.3**	**9.65**
64	*149*	*149*	*149*	*149*	*149*	148	146	143	140	136	131	126	120	**113**	**95.1**	**79.5**	**64.4**	**48.8**	**35.4**	**22.6**	**17.2**	...	...	...	...
65	*149*	*149*	*149*	*149*	*149*	148	146	143	140	136	131	126	120	**113**	**95.1**	**79.5**	**64.4**	**48.8**	**35.4**	**22.6**	**17.2**	...	...	...	...
66	*149*	*149*	*149*	*149*	*149*	*149*	148	146	144	142	140	138	136	133	131	127	124	**109**	**68.0**	**42.3**	**30.5**	**23.2**	**16.5**	...	...
67	*149*	*149*	*146*	*144*	*144*	*144*	*144*	144	144	143	141	139	138	136	134	132	129	126	**92.1**	**61.1**	**40.4**	**26.4**	**17.4**	**11.6**	**7.58**
68	*161*	*161*	*161*	*161*	*161*	160	158	155	151	147	142	136	130	**113**	**95.1**	**79.5**	**64.4**	**48.8**	**35.4**	**22.6**	**17.2**	...	...	...	...
69	*161*	*161*	*161*	*161*	*161*	160	158	155	151	147	142	136	130	**122**	**101**	**83.8**	**66.8**	**49.2**	**35.4**	**22.6**	**17.2**	...	...	...	...
70	*161*	*161*	*161*	*161*	*161*	*161*	*161*	*161*	*161*	*161*	*161*	*161*	*161*	*161*	159	155	151	146	**93.5**	**49.9**	**40.7**	...	...	...	...
71	*161*	*161*	*161*	*161*	*161*	*161*	161	158	156	154	152	149	147	144	141	138	134	**109**	**68.0**	**42.3**	**30.5**	**23.2**	**16.5**	...	...
72	*172*	*172*	*172*	*172*	*172*	*172*	*172*	*172*	170	165	159	153	146	138	**107**	**84.1**	**57.6**	**38.7**	**24.9**	**14.2**	**10.3**	...	...	...	...
73	*172*	*172*	*172*	*172*	*172*	*172*	*172*	*172*	*172*	*172*	*172*	*172*	171	168	165	160	154	**104**	**68.0**	**42.3**	**33.1**	...	...	...	...
74	*172*	*172*	*172*	*172*	*172*	*172*	*172*	170	168	165	163	161	158	155	152	148	144	**109**	**68.0**	**42.3**	**30.5**	**23.2**	**16.5**	...	...
75	*172*	*172*	*172*	*172*	*172*	*172*	*172*	172	169	166	164	161	159	156	153	149	146	**104**	**73.7**	**52.0**	**36.3**	**25.2**	**17.6**	**12.3**	**8.27**
76	*172*	172	171	169	167	166	165	165	165	164	164	162	159	156	130	126	104	**80.6**	**61.7**	**46.4**	**34.7**	**25.5**	**17.8**	**11.4**	**6.89**
77	*172*	*172*	*171*	*168*	*167*	*167*	*167*	*167*	*167*	*167*	*167*	*167*	*167*	*167*	*167*	*167*	*167*	**98.2**	**73.5**	**54.7**	**40.6**	**29.2**	**20.6**	**15.2**	**8.96**
78	*172*	*172*	*171*	*168*	*167*	*167*	*167*	*167*	*167*	*167*	*167*	*167*	*167*	*167*	*167*	*167*	*167*	**119**	**88.4**	**64.0**	**44.6**	**30.0**	**19.7**	**12.8**	**8.27**
79	*184*	*184*	*184*	*184*	*184*	*184*	*184*	*184*	*184*	*184*	*184*	*184*	*184*	*184*	183	178	172	**104**	**68.0**	**42.3**	**33.1**	...	...	...	...
80	*184*	*184*	*184*	*184*	*184*	*184*	*184*	*184*	*184*	*184*	*184*	*184*	*184*	*184*	183	178	172	**104**	**68.0**	**42.3**	**33.1**	...	...	...	...
81	*184*	*184*	*184*	*184*	*184*	*184*	*184*	*184*	*184*	*184*	*184*	*184*	*184*	*184*	183	178	172	**104**	**68.0**	**42.3**	**33.1**	...	...	...	...
82	*195*	*195*	*195*	194	191	188	185	182	177	172	166	160	152	144	**120**	**84.7**	**57.6**	**38.7**	**24.9**	**14.2**	**10.3**	...	...	...	...
83	*195*	*195*	*195*	*195*	*195*	*195*	*195*	*195*	*194*	*193*	*192*	*190*	*187*	*183*	*178*	*172*	*165*	*156*	*147*	*137*	**115**	**87.0**	**64.7**	**45.1**	**29.6**
84	*230*	...	...	...	...	...	...	...	...	...	...	...	...	...	...	...	...	...	...	...	...	...	...	...	...
85	*218*	*218*	*218*	...	...	...	...	...	...	...	...	...	...	...	...	...	...	...	...	...	...	...	...	...	...
86	*230*	*230*	*230*	...	...	...	...	...	...	...	...	...	...	...	...	...	...	...	...	...	...	...	...	...	...
87	*230*	*230*	*230*	...	...	...	...	...	...	...	...	...	...	...	...	...	...	...	...	...	...	...	...	...	...
88	*126*	*126*	*126*	*126*	124	122	120	119	117	115	114	112	110	108	106	103	100	97.1	**68.0**	**42.3**	**30.5**	**23.2**	**16.5**	...	...
89	*138*	129	124	120	117	115	112	110	109	107	106	105	103	102	100	98.7	96.8	94.6	92.0	**61.1**	**40.4**	**26.4**	**17.4**	**11.6**	**7.58**
90	*138*	*138*	132	128	125	122	120	118	116	114	113	112	110	109	107	105	103	101	**92.1**	**61.1**	**40.4**	**26.4**	**17.4**	**11.6**	**7.58**

Copyright © 2015 by the American Society of Mechanical Engineers.
No reproduction may be made of this material without written consent of ASME.

Table A-1M Basic Allowable Stresses in Tension for Metals (Metric) (Cont'd)

Numbers in Parentheses Refer to Notes for Appendix A Tables; Specifications Are ASTM Unless Otherwise Indicated

Line No.	Nominal Composition	Product Form	Spec. No.	Type/ Grade	UNS No.	Class/ Condition/ Temper	Size, mm	P-No. (5)	Notes	Min. Temp., °C (6)	Min. Tensile Str., MPa	Min. Yield Str., MPa	Max. Use Temp., °C
91	1¼Cr–½Mo	Forg. & ftg.	A182	F11	K11597	1	. . .	4	(2)(9)	−30	414	207	649
92	1¼Cr–½Mo	Forg. & ftg.	A234	WP11	K11597	1	. . .	4	(2)	−30	414	207	649
93	2¼Cr–1Mo	Forg. & ftg.	A182	F22	K21590	1	. . .	5A	(2)(9)(72)(75)	−30	414	207	649
94	2¼Cr–1Mo	Forg. & ftg.	A234	WP22	K21590	1	. . .	5A	(2)(72)	−30	414	207	649
95	5Cr–½Mo	Forg. & ftg.	A234	WP5	K41545	. . .	. . .	5B	(2)	−30	414	207	649
96	9Cr–1Mo	Forg. & ftg.	A234	WP9	K90941	. . .	. . .	5B	(2)	−30	414	207	649
97	3½Ni	Forg. & ftg.	A420	WPL3	K31918	. . .	. . .	9B	(2)	−100	448	241	93
98	3½Ni	Forg. & ftg.	A350	LF3	K32025	. . .	. . .	9B	(2)(9)	−100	483	259	93
99	½Cr–½Mo	Forg. & ftg.	A182	F2	K12122	. . .	. . .	3	(2)(9)	−30	483	276	538
100	C–½Mo	Forg. & ftg.	A182	F1	K12822	. . .	. . .	3	(2)(9)(58)	−30	483	276	593
101	1Cr–½Mo	Forg. & ftg.	A182	F12	K11564	2	. . .	4	(2)(9)	−30	483	276	649
102	1Cr–½Mo	Forg. & ftg.	A234	WP12	K12062	2	. . .	4	(2)	−30	483	276	649
103	1¼Cr–½Mo	Forg. & ftg.	A182	F11	K11572	2	. . .	4	(2)(9)	−30	483	276	649
104	1¼Cr–½Mo	Forg. & ftg.	A234	WP11	K11572	2	. . .	4	(2)	−30	483	276	649
105	5Cr–½Mo	Forg. & ftg.	A182	F5	K41545	. . .	. . .	5B	(2)(9)	−30	483	276	649
106	3Cr–1Mo	Forg. & ftg.	A182	F21	K31545	. . .	. . .	5A	(2)(9)	−30	517	310	649
107	2¼Cr–1Mo	Forg. & ftg.	A182	F22	K21590	3	. . .	5A	(2)(9)(72)	−30	517	310	649
108	2¼Cr–1Mo	Forg. & ftg.	A234	WP22	K21590	3	. . .	5A	(2)(72)	−30	517	310	649
109	9Cr–1Mo	Forg. & ftg.	A182	F9	K90941	. . .	. . .	5B	(2)(9)	−30	586	379	649
110	9Cr–1Mo–V	Forg. & ftg.	A182	F91	K90901	. . .	≤ 75	15E	(2)	−30	586	414	649
111	9Cr–1Mo–V	Forg. & ftg.	A234	WP91	K90901	. . .	≤ 75	15E	(2)	−30	586	414	649
112	5Cr–½Mo	Forg. & ftg.	A182	F5a	K42544	. . .	. . .	5B	(2)(9)	−30	621	448	649
113	9Ni	Forg. & ftg.	A420	WPL8	K81340	. . .	. . .	11A	(2)(47)	−195	689	517	93
114	C–½Mo	Castings	A352	LC1	J12522	. . .	. . .	3	(2)(9)(58)	−60	448	241	371
115	C–½Mo	Castings	A217	WC1	J12524	. . .	. . .	3	(2)(9)(58)	−30	448	241	593
116	2½Ni	Castings	A352	LC2	J22500	. . .	. . .	9A	(2)(9)	−75	483	276	343
117	3½Ni	Castings	A352	LC3	J31550	. . .	. . .	9B	(2)(9)	−100	483	276	343

Copyright © 2015 by the American Society of Mechanical Engineers.
No reproduction may be made of this material without written consent of ASME.

Table A-1M Basic Allowable Stresses in Tension for Metals (Metric) (Cont'd) (14)

Numbers in Parentheses Refer to Notes for Appendix A Tables; Specifications Are ASTM Unless Otherwise Indicated

	Basic Allowable Stress, *S*, MPa, at Metal Temperature, °C [Notes (1) and (4b)]																								
Line No.	Min. Temp. to 40	65	100	125	150	175	200	225	250	275	300	325	350	375	400	425	450	475	500	525	550	575	600	625	650
91	*138*	131	126	124	121	119	116	115	113	111	109	107	106	104	102	99.6	97.2	94.5	**73.7**	**52.0**	**36.3**	**25.2**	**17.6**	**12.3**	**8.27**
92	*138*	131	126	124	121	119	116	115	113	111	109	107	106	104	102	99.6	97.2	94.5	**73.7**	**52.0**	**36.3**	**25.2**	**17.6**	**12.3**	**8.27**
93	*138*	132	128	126	125	124	124	124	124	124	124	124	124	124	123	122	121	**99.6**	**80.9**	**63.3**	**47.5**	**34.2**	**23.5**	**15.3**	**9.65**
94	*138*	132	128	126	125	124	124	124	124	124	124	124	124	124	123	122	121	**99.6**	**80.9**	**63.3**	**47.5**	**34.2**	**23.5**	**15.3**	**9.65**
95	*138*	129	124	122	120	119	119	118	118	117	117	116	114	112	110	106	103	**80.6**	**61.7**	**46.4**	**34.7**	**25.5**	**17.8**	**11.4**	**6.89**
96	*138*	129	124	122	120	119	119	118	118	117	117	116	114	112	110	106	103	98.3	**87.5**	**61.2**	**42.9**	**29.9**	**20.6**	**14.4**	**10.3**
97	*149*	*149*	147	...	...	...	...	...	...	...	...	...	...	...	...	...	...	...	...	...	...	...	...	...	...
98	*161*	*161*	157	...	...	...	...	...	...	...	...	...	...	...	...	...	...	...	...	...	...	...	...	...	...
99	*161*	*161*	*161*	*161*	*161*	*161*	161	158	156	154	152	149	147	144	141	138	134	129	**93.5**	**49.9**	**40.7**	...	...	...	...
100	*161*	*161*	*161*	*161*	*161*	*161*	161	158	156	154	152	149	147	144	141	138	134	**109**	**68.0**	**42.3**	**30.5**	**23.2**	**16.5**	...	...
101	*161*	*161*	*157*	*155*	*155*	153	150	147	145	143	141	139	138	136	134	132	129	126	**92.1**	**61.1**	**40.4**	**26.4**	**17.4**	**11.6**	**7.58**
102	*161*	*161*	*157*	*155*	*155*	153	150	147	145	143	141	139	138	136	134	132	129	126	**92.1**	**61.1**	**40.4**	**26.4**	**17.4**	**11.6**	**7.58**
103	*161*	*161*	*161*	*161*	*161*	158	155	153	150	148	146	143	141	138	136	133	130	**104**	**73.7**	**52.0**	**36.3**	**25.2**	**17.6**	**12.3**	**8.27**
104	*161*	*161*	*161*	*161*	*161*	158	155	153	150	148	146	143	141	138	136	133	130	**104**	**73.7**	**52.0**	**36.3**	**25.2**	**17.6**	**12.3**	**8.27**
105	*161*	*161*	*160*	*157*	*156*	*155*	*155*	*155*	*154*	*154*	*153*	*151*	*149*	*146*	*142*	*137*	*131*	**80.6**	**61.7**	**46.4**	**34.7**	**25.5**	**17.8**	**11.4**	**6.89**
106	*172*	*172*	*172*	*169*	*168*	*167*	*166*	*166*	*165*	*165*	*164*	*164*	*162*	*161*	*158*	*155*	*152*	**98.2**	**73.5**	**54.7**	**40.6**	**29.2**	**20.6**	**15.2**	**8.96**
107	*172*	*172*	*171*	*168*	*167*	*167*	*167*	*167*	*167*	*167*	*167*	*167*	*167*	*167*	*167*	*167*	*167*	**119**	**88.4**	**64.0**	**44.6**	**30.0**	**19.7**	**12.8**	**8.27**
108	*172*	*172*	*171*	*168*	*167*	*167*	*167*	*167*	*167*	*167*	*167*	*167*	*167*	*167*	*167*	*167*	*167*	**119**	**88.4**	**64.0**	**44.6**	**30.0**	**19.7**	**12.8**	**8.27**
109	*195*	*195*	*194*	*191*	*189*	*188*	*188*	*188*	*187*	*187*	*186*	*184*	*181*	*177*	*172*	*166*	*159*	*151*	**83.2**	**60.2**	**42.9**	**29.9**	**20.6**	**14.4**	**10.3**
110	*195*	*195*	*195*	*195*	*195*	*195*	*195*	*195*	*194*	*193*	*192*	*190*	*187*	*183*	*178*	*172*	*165*	*156*	*147*	*137*	**115**	**87.0**	**64.7**	**45.1**	**29.6**
111	*195*	*195*	*195*	*195*	*195*	*195*	*195*	*195*	*194*	*193*	*192*	*190*	*187*	*183*	*178*	*172*	*165*	*156*	*147*	*137*	**115**	**87.0**	**64.7**	**45.1**	**29.6**
112	*207*	*207*	*205*	*202*	*200*	*199*	*199*	*199*	*198*	*198*	*196*	*194*	*191*	*187*	*182*	*176*	*169*	**80.6**	**61.7**	**46.4**	**34.7**	**25.5**	**17.8**	**11.4**	**6.89**
113	*230*	*230*	*230*	...	...	...	...	...	...	...	...	...	...	...	...	...	...	...	...	...	...	...	...	...	...
114	*149*	*149*	*149*	148	145	143	140	138	137	135	133	131	129	127	...	...	...	...	...	...	...	...	...	...	...
115	*149*	*149*	*149*	148	145	143	140	138	137	135	133	131	129	126	123	120	117	**109**	**68.0**	**42.3**	**30.5**	**23.2**	**16.5**	...	...
116	*161*	*161*	*161*	*161*	*161*	160	158	155	151	147	142	136	131	...	...	...	...	...	...	...	...	...	...	...	...
117	*161*	*161*	*161*	*161*	*161*	160	158	155	151	147	142	136	131	...	...	...	...	...	...	...	...	...	...	...	...

Copyright © 2015 by the American Society of Mechanical Engineers.
No reproduction may be made of this material without written consent of ASME.

Table A-1M Basic Allowable Stresses in Tension for Metals (Metric) (Cont'd)

Numbers in Parentheses Refer to Notes for Appendix A Tables; Specifications Are ASTM Unless Otherwise Indicated

Line No.	Nominal Composition	Product Form	Spec. No.	Type/ Grade	UNS No.	Class/ Condition/ Temper	Size, mm	P-No. (5)	Notes	Min. Temp., °C (6)	Min. Tensile Str., MPa	Min. Yield Str., MPa	Max. Use Temp., °C
118	Ni–Cr–½Mo	Castings	A217	WC4	J12082	. . .	. . .	4	(2)(9)	−30	483	276	538
119	Ni–Cr–1Mo	Castings	A217	WC5	J22000	. . .	. . .	4	(2)(9)	−30	483	276	593
120	1¼Cr–½Mo	Castings	A217	WC6	J12072	. . .	. . .	4	(2)(9)	−30	483	276	649
121	2¼Cr–1Mo	Castings	A217	WC9	J21890	. . .	. . .	5A	(2)(9)	−30	483	276	649
122	5Cr–½Mo	Castings	A217	C5	J42045	. . .	. . .	5B	(2)(9)	−30	621	414	649
123	9Cr–1Mo	Castings	A217	C12	J82090	. . .	. . .	5B	(2)(9)	−30	621	414	649

Copyright © 2015 by the American Society of Mechanical Engineers.
No reproduction may be made of this material without written consent of ASME.

Table A-1M Basic Allowable Stresses in Tension for Metals (Metric) (Cont'd) (14)

Numbers in Parentheses Refer to Notes for Appendix A Tables; Specifications Are ASTM Unless Otherwise Indicated

		Basic Allowable Stress, *S*, MPa, at Metal Temperature, °C [Notes (1) and (4b)]																						
Line No.	Min. Temp. to 40	65	100	125	150	175	200	225	250	275	300	325	350	375	400	425	450	475	500	525	550	575	600	625	650
118	*161*	*161*	*161*	*161*	*161*	*161*	*161*	*161*	159	158	156	154	152	149	146	142	137	131	**74.4**	**49.9**	**40.7**	. . .	. . .	. . .	. . .
119	*161*	*161*	*161*	*161*	*161*	*161*	*161*	*161*	159	158	156	154	152	149	146	142	137	131	**74.4**	**49.9**	**34.3**	**23.2**	**16.5**	. . .	. . .
120	*161*	*161*	*161*	*161*	*161*	158	155	153	150	148	146	143	141	138	136	133	130	**104**	**73.7**	**52.0**	**36.3**	**25.2**	**17.6**	**12.3**	**8.27**
121	*161*	*161*	*160*	*157*	*156*	*156*	*156*	*156*	*156*	*156*	*156*	*156*	*156*	*156*	*156*	*156*	*156*	**119**	**88.4**	**64.0**	**44.6**	**30.0**	**19.7**	**12.8**	**8.27**
122	*207*	*207*	*205*	*202*	*200*	*199*	*199*	*199*	*198*	*198*	*196*	*194*	*191*	*187*	*182*	*176*	*169*	**80.6**	**61.7**	**46.4**	**34.7**	**25.5**	**17.8**	**11.4**	**6.89**
123	*207*	*207*	*205*	*202*	*200*	*199*	*199*	*199*	*198*	*198*	*196*	*194*	*191*	*187*	*182*	*176*	*169*	*160*	**83.2**	**60.2**	**42.9**	**29.9**	**20.6**	**14.4**	**10.3**

Copyright © 2015 by the American Society of Mechanical Engineers.
No reproduction may be made of this material without written consent of ASME.

(14)

Table A-1M Basic Allowable Stresses in Tension for Metals (Metric) (Cont'd)

Numbers in Parentheses Refer to Notes for Appendix A Tables; Specifications Are ASTM Unless Otherwise Indicated

Line No.	Nominal Composition	Product Form	Spec. No.	Type/ Grade	UNS No.	Class/ Condition/ Temper	Size, mm	P-No. (5)
1	18Cr–10Ni–Ti	Smls. pipe	A312	TP321	S32100	. . .	> 10	8
2	18Cr–10Ni–Ti	Pipe	A376	TP321	S32100	. . .	> 10	8
3	18Cr–8Ni	Tube	A213	TP304L	S30403	. . .	. . .	8
4	18Cr–8Ni	Tube	A269	TP304L	S30403	. . .	. . .	8
5	18Cr–8Ni	Pipe	A312	TP304L	S30403	. . .	. . .	8
6	18Cr–8Ni	Pipe	A358	304L	S30403	. . .	. . .	8
7	16Cr–12Ni–2Mo	Tube	A213	TP316L	S31603	. . .	. . .	8
8	16Cr–12Ni–2Mo	Tube	A269	TP316L	S31603	. . .	. . .	8
9	16Cr–12Ni–2Mo	Pipe	A312	TP316L	S31603	. . .	. . .	8
10	16Cr–12Ni–2Mo	Pipe	A358	316L	S31603	. . .	. . .	8
11	16Cr–12Ni–2Mo–Ti	Tube	A213	TP316Ti	S31635	. . .	. . .	8
12	18Cr–10Ni–Ti	Smls. pipe	A312	TP321	S32100	. . .	> 10	8
13	18Cr–10Ni–Ti	Pipe	A376	TP321	S32100	. . .	> 10	8
14	18Cr–10Ni–Ti	Smls. pipe	A312	TP321H	S32109	. . .	> 10	8
15	18Cr–10Ni–Ti	Pipe	A376	TP321H	S32109	. . .	> 10	8
16	23Cr–13Ni	Pipe & tube	A451	CPH8	J93400	. . .	. . .	8
17	25Cr–20Ni	Pipe & tube	A451	CPK20	J94202	. . .	. . .	8
18	11Cr–Ti	Tube	A268	TP409	S40900	. . .	. . .	7
19	18Cr–Ti	Tube	A268	TP430Ti	S43036	. . .	. . .	7
20	15Cr–13Ni–2Mo–Cb	Pipe & tube	A451	CPF10MC	. . .	. . .	. . .	8
21	16Cr–8Ni–2Mo	Pipe	A376	16-8-2H	S16800	. . .	. . .	8
22	12Cr–Al	Tube	A268	TP405	S40500	. . .	. . .	7
23	13Cr	Tube	A268	TP410	S41000	. . .	. . .	6
24	16Cr	Tube	A268	TP430	S43000	. . .	. . .	7
25	18Cr–13Ni–3Mo	Pipe	A312	TP317L	S31703	. . .	. . .	8
26	25Cr–20Ni	Pipe	A312	TP310	. . .	. . .	. . .	8
27	25Cr–20Ni	Pipe & tube	A358	310S	S31008	. . .	. . .	8
28	25Cr–20Ni	Pipe	A409	TP310	S31000	. . .	. . .	8
29	18Cr–10Ni–Ti	Smls. & wld. pipe	A312	TP321	S32100	. . .	≤ 10	8
30	18Cr–10Ni–Ti	Pipe	A358	321	S32100	. . .	. . .	8
31	18Cr–10Ni–Ti	Pipe	A376	TP321	S32100	. . .	≤ 10	8
32	18Cr–10Ni–Ti	Pipe	A409	TP321	S32100	. . .	. . .	8
33	23Cr–12Ni	Pipe	A312	TP309	. . .	. . .	. . .	8
34	23Cr–12Ni	Pipe & tube	A358	309S	S30908	. . .	. . .	8
35	23Cr–12Ni	Pipe	A409	TP309	S30900	. . .	. . .	8

Copyright © 2015 by the American Society of Mechanical Engineers.
No reproduction may be made of this material without written consent of ASME.

Table A-1M Basic Allowable Stresses in Tension for Metals (Metric) (Cont'd) (14)

Numbers in Parentheses Refer to Notes for Appendix A Tables; Specifications Are ASTM Unless Otherwise Indicated

Line No.	Notes	Min. Temp., °C (6)	Min. Tensile Strength, MPa	Min. Yield Strength, MPa	Max. Use Temp., °C	Basic Allowable Stress, *S*, MPa, at Metal Temperature, °C [Notes (1), (3), and (4b)] Min. Temp. to 40	65	100	125	150	175	200
1	(2)(30)(36)	−255	483	172	816	115	115	115	115	115	115	115
2	(2)(30)(36)	−255	483	172	816	115	115	115	115	115	115	115
3	(2)(14)(36)	−255	483	172	816	115	115	115	115	115	114	110
4	(2)(14)(36)	−255	483	172	816	115	115	115	115	115	114	110
5	(2)	−255	483	172	816	115	115	115	115	115	114	110
6	(2)(36)	−255	483	172	816	115	115	115	115	115	114	110
7	(2)(14)(36)	−255	483	172	816	115	115	115	115	115	113	109
8	(2)(14)(36)	−255	483	172	816	115	115	115	115	115	113	109
9	(2)	−255	483	172	816	115	115	115	115	115	113	109
10	(2)(36)	−255	483	172	816	115	115	115	115	115	113	109
11	(30)	−200	517	207	816	138	138	138	138	138	138	134
12	(2)(28)(30)(36)	−255	483	172	816	115	115	115	115	115	115	115
13	(2)(28)(30)(36)	−255	483	172	816	115	115	115	115	115	115	115
14	(2)(30)(36)	−200	483	172	816	115	115	115	115	115	115	115
15	(2)	−200	483	172	816	115	115	115	115	115	115	115
16	(2)(26)(28)(35)	−200	448	193	816	129	129	129	129	*127*	*125*	*124*
17	(2)(12)(28)(35)(39)	−200	448	193	816	129	129	129	129	*127*	*125*	*124*
18	(2)(35)	−30	414	207	40	138	...	...	...	...	...	...
19	(2)(35)(49)	−30	414	276	40	138	...	...	...	...	...	...
20	(2)(28)	−200	483	207	40	138	...	...	...	...	...	...
21	(2)(26)(31)(35)	−200	517	207	40	138	...	...	...	...	...	...
22	(2)(35)	−30	414	207	538	138	138	138	*137*	*135*	*134*	*133*
23	(2)(35)	−30	414	207	649	138	138	138	*137*	*135*	*134*	*133*
24	(2)(35)(49)	−30	414	241	649	*138*	*138*	*138*	*137*	*135*	*134*	*133*
25	(2)	−200	517	207	454	138	138	138	138	138	136	131
26	(2)(28)(35)(39)	−200	517	207	816	138	138	138	138	138	138	138
27	(2)(28)(31)(35)(36)	−200	517	207	816	138	138	138	138	138	138	138
28	(2)(28)(31)(35)(36)(39)	−200	517	207	816	138	138	138	138	138	138	138
29	(2)(30)	−255	517	207	816	138	138	138	138	138	138	138
30	(2)(30)(36)	−255	517	207	816	138	138	138	138	138	138	138
31	(2)(30)(36)	−255	517	207	816	138	138	138	138	138	138	138
32	(2)(30)(36)	−255	517	207	816	138	138	138	138	138	138	138
33	(2)(28)(35)(39)	−200	517	207	816	138	138	138	138	138	138	138
34	(2)(28)(31)(35)(36)	−200	517	207	816	138	138	138	138	138	138	138
35	(2)(28)(31)(35)(36)(39)	−200	517	207	816	138	138	138	138	138	138	138

Copyright © 2015 by the American Society of Mechanical Engineers.
No reproduction may be made of this material without written consent of ASME.

(14)

Table A-1M Basic Allowable Stresses in Tension for Metals (Metric) (Cont'd)

Numbers in Parentheses Refer to Notes for Appendix A Tables; Specifications Are ASTM Unless Otherwise Indicated

	Basic Allowable Stress, *S*, MPa, at Metal Temperature, °C [Notes (1), (3), and (4b)]												
Line No.	225	250	275	300	325	350	375	400	425	450	475	500	525
1	115	112	109	107	104	102	100	98.8	97.5	96.3	95.3	94.4	93.6
2	115	112	109	107	104	102	100	98.8	97.5	96.3	95.3	94.4	93.6
3	106	103	99.9	97.7	95.7	94.1	92.6	91.3	90.0	88.7	87.3	85.6	83.7
4	106	103	99.9	97.7	95.7	94.1	92.6	91.3	90.0	88.7	87.3	85.6	83.7
5	106	103	99.9	97.7	95.7	94.1	92.6	91.3	90.0	88.7	87.3	85.6	83.7
6	106	103	99.9	97.7	95.7	94.1	92.6	91.3	90.0	88.7	87.3	85.6	83.7
7	106	103	100	98.1	96.1	94.3	92.6	90.9	89.3	87.6	85.9	84.2	82.5
8	106	103	100	98.1	96.1	94.3	92.6	90.9	89.3	87.6	85.9	84.2	82.5
9	106	103	100	98.1	96.1	94.3	92.6	90.9	89.3	87.6	85.9	84.2	82.5
10	106	103	100	98.1	96.1	94.3	92.6	90.9	89.3	87.6	85.9	84.2	82.5
11	129	124	120	117	115	113	112	111	110	109	108	107	106
12	115	112	109	107	104	102	100	98.8	97.5	96.3	95.3	94.4	93.6
13	115	112	109	107	104	102	100	98.8	97.5	96.3	95.3	94.4	93.6
14	115	112	109	107	104	102	100	98.8	97.5	96.3	95.3	94.4	93.6
15	115	112	109	107	104	102	100	98.8	97.5	96.3	95.3	94.4	93.6
16	*124*	123	121	119	117	115	112	109	106	103	100	96.9	93.7
17	*124*	123	121	119	117	115	112	109	106	103	100	96.9	93.7
18	...	...	...	...	...	...	...	...	...	...	...	...	...
19	...	...	...	...	...	...	...	...	...	...	...	...	...
20	...	...	...	...	...	...	...	...	...	...	...	...	...
21	...	...	...	...	...	...	...	...	...	...	...	...	...
22	*132*	*131*	*130*	*129*	*127*	*124*	*121*	*118*	*114*	*109*	*103*	**70.1**	**38.8**
23	*132*	*131*	*130*	*129*	*127*	*124*	*121*	*118*	*114*	*109*	**92.5**	**68.4**	**51.1**
24	*132*	*131*	*130*	*129*	*127*	*124*	*121*	*118*	*114*	*109*	**88.7**	**69.8**	**52.6**
25	127	123	120	118	115	113	111	109	107	105	103	...	...
26	137	134	131	129	127	125	123	122	120	119	117	116	**84.9**
27	137	134	131	129	127	125	123	122	120	119	117	116	**84.9**
28	137	134	131	129	127	125	123	122	120	119	117	116	**84.9**
29	138	135	131	128	125	123	120	119	117	116	114	113	112
30	138	135	131	128	125	123	120	119	117	116	114	113	112
31	138	135	131	128	125	123	120	119	117	116	114	113	112
32	138	135	131	128	125	123	120	119	117	116	114	113	112
33	138	135	133	131	129	127	125	124	122	121	119	117	**108**
34	138	135	133	131	129	127	125	124	122	121	119	117	**108**
35	138	135	133	131	129	127	125	124	122	121	119	117	**108**

Copyright © 2015 by the American Society of Mechanical Engineers.
No reproduction may be made of this material without written consent of ASME.

Table A-1M Basic Allowable Stresses in Tension for Metals (Metric) (Cont'd) (14)

Numbers in Parentheses Refer to Notes for Appendix A Tables; Specifications Are ASTM Unless Otherwise Indicated

	Basic Allowable Stress, *S*, MPa, at Metal Temperature, °C [Notes (1), (3), and (4b)]											
Line No.	550	575	600	625	650	675	700	725	750	775	800	825
1	88.7	59.2	44.0	32.9	24.5	18.3	12.5	8.49	6.19	4.28	2.75	2.07
2	88.7	59.2	44.0	32.9	24.5	18.3	12.5	8.49	6.19	4.28	2.75	2.07
3	81.4	40.4	33.2	26.7	21.9	18.2	15.0	12.4	8.87	7.20	6.58	6.21
4	81.4	40.4	33.2	26.7	21.9	18.2	15.0	12.4	8.87	7.20	6.58	6.21
5	81.4	40.4	33.2	26.7	21.9	18.2	15.0	12.4	8.87	7.20	6.58	6.21
6	81.4	40.4	33.2	26.7	21.9	18.2	15.0	12.4	8.87	7.20	6.58	6.21
7	80.8	79.3	77.9	58.0	43.6	33.0	25.3	18.8	14.0	10.4	7.99	6.89
8	80.8	79.3	77.9	58.0	43.6	33.0	25.3	18.8	14.0	10.4	7.99	6.89
9	80.8	79.3	77.9	58.0	43.6	33.0	25.3	18.8	14.0	10.4	7.99	6.89
10	80.8	73.0	67.9	58.0	43.6	33.0	25.3	18.8	14.0	10.4	7.99	6.89
11	106	101	80.3	65.5	50.4	38.6	29.6	23.0	17.7	13.4	10.4	8.05
12	92.7	76.5	58.7	46.0	36.8	28.7	23.0	18.4	14.5	11.5	9.02	7.58
13	92.7	76.5	58.7	46.0	36.8	28.7	23.0	18.4	14.5	11.5	9.02	7.58
14	92.7	76.5	58.7	46.0	36.8	28.7	23.0	18.4	14.5	11.5	9.02	7.58
15	92.7	76.5	58.7	46.0	36.8	28.7	23.0	18.4	14.5	11.5	9.02	7.58
16	68.1	53.5	42.1	33.2	25.9	20.3	16.5	13.2	10.1	7.35	5.89	5.52
17	73.2	64.4	56.5	49.0	41.0	33.5	25.4	18.3	12.8	9.01	6.59	5.52
18	...	...	...	...	...	...	...	...	...	...	...	...
19	...	...	...	...	...	...	...	...	...	...	...	...
20	...	...	...	...	...	...	...	...	...	...	...	...
21	...	...	...	...	...	...	...	...	...	...	...	...
22	27.6	...	...	...	...	...	...	...	...	...	...	...
23	37.4	26.3	17.8	11.4	6.89	...	...	...	...	...	...	...
24	38.1	27.6	20.6	15.9	12.4	...	...	...	...	...	...	...
25	...	...	...	...	...	...	...	...	...	...	...	...
26	59.0	43.5	31.9	23.6	16.9	10.7	6.10	3.90	2.99	2.36	1.73	1.38
27	59.0	43.5	31.9	23.6	16.9	10.7	6.10	3.90	2.99	2.36	1.73	1.38
28	59.0	43.5	31.9	23.6	16.9	10.7	6.10	3.90	2.99	2.36	1.73	1.38
29	88.7	59.2	44.0	32.9	24.5	18.3	12.5	8.49	6.19	4.28	2.75	2.07
30	88.7	59.2	44.0	32.9	24.5	18.3	12.5	8.49	6.19	4.28	2.75	2.07
31	89.9	59.2	44.0	32.9	24.5	18.3	12.5	8.49	6.19	4.28	2.75	2.07
32	88.7	59.2	44.0	32.9	24.5	18.3	12.5	8.49	6.19	4.28	2.75	2.07
33	83.7	64.0	48.5	36.3	27.3	21.0	15.9	12.5	9.87	7.65	5.97	5.17
34	83.7	64.0	48.5	36.3	27.3	21.0	15.9	12.5	9.87	7.65	5.97	5.17
35	83.7	64.0	48.5	36.3	27.3	21.0	15.9	12.5	9.87	7.65	5.97	5.17

Copyright © 2015 by the American Society of Mechanical Engineers.
No reproduction may be made of this material without written consent of ASME.

Table A-1M Basic Allowable Stresses in Tension for Metals (Metric) (Cont'd)

Numbers in Parentheses Refer to Notes for Appendix A Tables; Specifications Are ASTM Unless Otherwise Indicated

Line No.	Nominal Composition	Product Form	Spec. No.	Type/ Grade	UNS No.	Class/ Condition/ Temper	Size, mm	P-No. (5)
36	18Cr–8Ni	Pipe & tube	A451	CPF8	J92600	. . .	. . .	8
37	18Cr–10Ni–Cb	Pipe	A312	TP347	S34700	. . .	. . .	8
38	18Cr–10Ni–Cb	Pipe	A358	347	S34700	. . .	. . .	8
39	18Cr–10Ni–Cb	Pipe	A376	TP347	S34700	. . .	. . .	8
40	18Cr–10Ni–Cb	Pipe	A409	TP347	S34700	. . .	. . .	8
41	18Cr–10Ni–Cb	Pipe	A312	TP348	S34800	. . .	. . .	8
42	18Cr–10Ni–Cb	Pipe	A358	348	S34800	. . .	. . .	8
43	18Cr–10Ni–Cb	Pipe	A376	TP348	S34800	. . .	. . .	8
44	18Cr–10Ni–Cb	Pipe	A409	TP348	S34800	. . .	. . .	8
45	23Cr–13Ni	Pipe & tube	A451	CPH10	J93402	. . .	. . .	8
46	23Cr–13Ni	Pipe & tube	A451	CPH20	J93402	. . .	. . .	8
47	25Cr–20Ni	Pipe	A312	TP310	. . .	. . .	. . .	8
48	25Cr–20Ni	Pipe	A358	310S	S31008	. . .	. . .	8
49	18Cr–10Ni–Cb	Pipe & tube	A451	CPF8C	J92710	. . .	. . .	8
50	18Cr–10Ni–Ti	Smls. & wld. pipe	A312	TP321	S32100	. . .	≤ 10	8
51	18Cr–10Ni–Ti	Pipe	A358	321	S32100	. . .	. . .	8
52	18Cr–10Ni–Ti	Pipe	A376	TP321	S32100	. . .	≤ 10	8
53	18Cr–10Ni–Ti	Pipe	A409	TP321	S32100	. . .	. . .	8
54	18Cr–10Ni–Ti	Pipe	A376	TP321H	S32109	. . .	≤ 10	8
55	18Cr–10Ni–Ti	Smls. & wld. pipe	A312	TP321H	S32109	. . .	≤ 10	8
56	16Cr–12Ni–Mo	Tube	A213	TP316	S31600	. . .	. . .	8
57	16Cr–12Ni–Mo	Tube	A269	TP316	S31600	. . .	. . .	8
58	16Cr–12Ni–2Mo	Pipe	A312	TP316	S31600	. . .	. . .	8
59	16Cr–12Ni–2Mo	Pipe	A358	316	S31600	. . .	. . .	8
60	16Cr–12Ni–2Mo	Pipe	A376	TP316	S31600	. . .	. . .	8
61	16Cr–12Ni–2Mo	Pipe	A409	TP316	S31600	. . .	. . .	8
62	18Cr–3Ni–3Mo	Pipe	A312	TP317	S31700	. . .	. . .	8
63	18Cr–3Ni–3Mo	Pipe	A409	TP317	S31700	. . .	. . .	8
64	16Cr–12Ni–2Mo	Pipe	A376	TP316H	S31609	. . .	. . .	8
65	16Cr–12Ni–2Mo	Pipe	A312	TP316H	S31609	. . .	. . .	8

Copyright © 2015 by the American Society of Mechanical Engineers.
No reproduction may be made of this material without written consent of ASME.

Table A-1M Basic Allowable Stresses in Tension for Metals (Metric) (Cont'd) (14)

Numbers in Parentheses Refer to Notes for Appendix A Tables; Specifications Are ASTM Unless Otherwise Indicated

Line No.	Notes	Min. Temp., °C (6)	Min. Tensile Strength, MPa	Min. Yield Strength, MPa	Max. Use Temp., °C	Basic Allowable Stress, *S*, MPa, at Metal Temperature, °C [Notes (1), (3), and (4b)] Min. Temp. to 40	65	100	125	150	175	200
36	(2)(26)(28)	−255	483	207	816	138	138	138	138	138	134	129
37	(2)	−255	517	207	816	138	138	138	138	138	138	138
38	(2)(30)(36)	−255	517	207	816	138	138	138	138	138	138	138
39	(2)(30)(36)	−255	517	207	816	138	138	138	138	138	138	138
40	(2)(30)(36)	−255	517	207	816	138	138	138	138	138	138	138
41	(2)	−200	517	207	816	138	138	138	138	138	138	138
42	(2)(30)(36)	−200	517	207	816	138	138	138	138	138	138	138
43	(2)(30)(36)	−200	517	207	816	138	138	138	138	138	138	138
44	(2)(30)(36)	−200	517	207	816	138	138	138	138	138	138	138
45	(2)(12)(14)(28)(35)(39)	−200	483	207	816	138	138	138	138	*137*	*135*	*134*
46	(2)(12)(14)(28)(35)(39)	−200	483	207	816	138	138	138	138	*137*	*135*	*134*
47	(2)(28)(29)(35)(39)	−200	517	207	816	138	138	138	138	138	138	138
48	(2)(28)(29)(31)(35)(36)	−200	517	207	816	138	138	138	138	138	138	138
49	(2)(28)	−200	483	207	816	138	138	138	138	138	134	129
50	(2)(28)(30)	−255	517	207	816	138	138	138	138	138	138	138
51	(2)(28)(30)(36)	−255	517	207	816	138	138	138	138	138	138	138
52	(2)(28)(30)(36)	−255	517	207	816	138	138	138	138	138	138	138
53	(2)(28)(30)(36)	−255	517	207	816	138	138	138	138	138	138	138
54	(2)(30)(36)	−200	517	207	816	138	138	138	138	138	138	138
55	(2)	−200	517	207	816	138	138	138	138	138	138	138
56	(2)(14)(26)(28)(31)(36)	−255	517	207	816	138	138	138	138	138	138	134
57	(2)(14)(26)(28)(31)(36)	−255	517	207	816	138	138	138	138	138	138	134
58	(2)(26)(28)	−255	517	207	816	138	138	138	138	138	138	134
59	(2)(26)(28)(31)(36)	−255	517	207	816	138	138	138	138	138	138	134
60	(2)(26)(28)(31)(36)	−255	517	207	816	138	138	138	138	138	138	134
61	(2)(26)(28)(31)(36)	−255	517	207	816	138	138	138	138	138	138	134
62	(2)(26)(28)	−200	517	207	816	138	138	138	138	138	138	134
63	(2)(26)(28)(31)(36)	−200	517	207	816	138	138	138	138	138	138	134
64	(2)(26)(31)(36)	−200	517	207	816	138	138	138	138	138	138	134
65	(2)(26)	−200	517	207	816	138	138	138	138	138	138	134

Copyright © 2015 by the American Society of Mechanical Engineers.
No reproduction may be made of this material without written consent of ASME.

(14)

Table A-1M Basic Allowable Stresses in Tension for Metals (Metric) (Cont'd)

Numbers in Parentheses Refer to Notes for Appendix A Tables; Specifications Are ASTM Unless Otherwise Indicated

	Basic Allowable Stress, *S*, MPa, at Metal Temperature, °C [Notes (1), (3), and (4b)]												
Line No.	225	250	275	300	325	350	375	400	425	450	475	500	525
36	125	122	119	116	113	111	109	107	105	103	101	99.1	**94.4**
37	138	138	*137*	135	132	130	128	127	126	126	125	125	125
38	138	138	*137*	135	132	130	128	127	126	126	125	125	125
39	138	138	*137*	135	132	130	128	127	126	126	125	125	125
40	138	138	*137*	135	132	130	128	127	126	126	125	125	125
41	138	138	*137*	135	132	130	128	127	126	126	125	125	125
42	138	138	*137*	135	132	130	128	127	126	126	125	125	125
43	138	138	*137*	135	132	130	128	127	126	126	125	125	125
44	138	138	*137*	135	132	130	128	127	126	126	125	125	125
45	133	131	129	128	125	123	120	117	114	111	107	104	100
46	133	131	129	128	125	123	120	117	114	111	107	104	100
47	137	134	131	129	127	125	123	122	120	119	117	116	**108**
48	137	134	131	129	127	125	123	122	120	119	117	116	**108**
49	125	122	119	116	113	111	109	107	105	103	101	99.1	97.3
50	138	135	131	128	125	123	120	119	117	116	114	113	112
51	138	135	131	128	125	123	120	119	117	116	114	113	112
52	138	135	131	128	125	123	120	119	117	116	114	113	112
53	138	135	131	128	125	123	120	119	117	116	114	113	112
54	138	135	131	128	125	123	120	119	117	116	114	113	112
55	138	135	131	128	125	123	120	119	117	116	114	113	112
56	129	125	122	119	116	114	112	111	110	109	108	107	106
57	129	125	122	119	116	114	112	111	110	109	108	107	106
58	129	125	122	119	116	114	112	111	110	109	108	107	106
59	129	125	122	119	116	114	112	111	110	109	108	107	106
60	129	125	122	119	116	114	112	111	110	109	108	107	106
61	129	125	122	119	116	114	112	111	110	109	108	107	106
62	129	125	122	119	116	114	112	111	110	109	108	107	106
63	129	125	122	119	116	114	112	111	110	109	108	107	106
64	129	125	122	119	116	114	112	111	110	109	108	107	106
65	129	125	122	119	116	114	112	111	110	109	108	107	106

Copyright © 2015 by the American Society of Mechanical Engineers.
No reproduction may be made of this material without written consent of ASME.

Table A-1M Basic Allowable Stresses in Tension for Metals (Metric) (Cont'd) (14)

Numbers in Parentheses Refer to Notes for Appendix A Tables; Specifications Are ASTM Unless Otherwise Indicated

	Basic Allowable Stress, *S*, MPa, at Metal Temperature, °C [Notes (1), (3), and (4b)]											
Line No.	550	575	600	625	650	675	700	725	750	775	800	825
36	75.3	60.4	49.0	40.1	32.8	27.2	23.4	19.6	16.8	14.7	12.8	11.7
37	97.6	75.9	57.2	40.2	30.3	23.2	16.2	11.4	8.97	7.08	5.89	5.52
38	97.6	75.9	57.2	40.2	30.3	23.2	16.2	11.4	8.97	7.08	5.89	5.52
39	97.6	75.9	57.2	40.2	30.3	23.2	16.2	11.4	8.97	7.08	5.89	5.52
40	97.6	75.9	57.2	40.2	30.3	23.2	16.2	11.4	8.97	7.08	5.89	5.52
41	97.6	75.9	57.2	40.2	30.3	23.2	16.2	11.4	8.97	7.08	5.89	5.52
42	97.6	75.9	57.2	40.2	30.3	23.2	16.2	11.4	8.97	7.08	5.89	5.52
43	97.6	75.9	57.2	40.2	30.3	23.2	16.2	11.4	8.97	7.08	5.89	5.52
44	97.6	75.9	57.2	40.2	30.3	23.2	16.2	11.4	8.97	7.08	5.89	5.52
45	68.1	53.5	42.1	33.2	25.9	20.3	16.5	13.2	10.1	7.35	5.89	5.52
46	68.1	53.5	42.1	33.2	25.9	20.3	16.5	13.2	10.1	7.35	5.89	5.52
47	83.7	64.0	48.5	36.3	27.3	21.0	15.9	12.5	9.87	7.65	5.97	5.17
48	83.7	64.0	48.5	36.3	27.3	21.0	15.9	12.5	9.87	7.65	5.97	5.17
49	95.5	75.9	57.2	40.2	30.3	23.2	16.2	11.4	8.97	7.08	5.89	5.52
50	100	76.5	58.7	46.0	36.8	28.7	23.0	18.4	14.5	11.5	9.02	7.58
51	100	76.5	58.7	46.0	36.8	28.7	23.0	18.4	14.5	11.5	9.02	7.58
52	100	76.5	58.7	46.0	36.8	28.7	23.0	18.4	14.5	11.5	9.02	7.58
53	100	76.5	58.7	46.0	36.8	28.7	23.0	18.4	14.5	11.5	9.02	7.58
54	100	76.5	58.7	46.0	36.8	28.7	23.0	18.4	14.5	11.5	9.02	7.58
55	100	76.5	58.7	46.0	36.8	28.7	23.0	18.4	14.5	11.5	9.02	7.58
56	105	97.8	80.8	65.0	50.4	38.6	29.6	23.0	17.4	13.3	10.4	8.96
57	105	97.8	80.8	65.0	50.4	38.6	29.6	23.0	17.4	13.3	10.4	8.96
58	105	97.8	80.8	65.0	50.4	38.6	29.6	23.0	17.4	13.3	10.4	8.96
59	105	97.8	80.8	65.0	50.4	38.6	29.6	23.0	17.4	13.3	10.4	8.96
60	105	97.8	80.8	65.0	50.4	38.6	29.6	23.0	17.4	13.3	10.4	8.96
61	105	97.8	80.8	65.0	50.4	38.6	29.6	23.0	17.4	13.3	10.4	8.96
62	105	97.8	80.8	65.0	50.4	38.6	29.6	23.0	17.4	13.3	10.4	8.96
63	105	97.8	80.8	65.0	50.4	38.6	29.6	23.0	17.4	13.3	10.4	8.96
64	105	97.8	80.8	65.0	50.4	38.6	29.6	23.0	17.4	13.3	10.4	8.96
65	105	97.8	80.8	65.0	50.4	38.6	29.6	23.0	17.4	13.3	10.4	8.96

Copyright © 2015 by the American Society of Mechanical Engineers.
No reproduction may be made of this material without written consent of ASME.

(14)

Table A-1M Basic Allowable Stresses in Tension for Metals (Metric) (Cont'd)

Numbers in Parentheses Refer to Notes for Appendix A Tables; Specifications Are ASTM Unless Otherwise Indicated

Line No.	Nominal Composition	Product Form	Spec. No.	Type/ Grade	UNS No.	Class/ Condition/ Temper	Size, mm	P-No. (5)
66	18Cr–10Ni–Cb	Pipe	A376	TP347H	S34709	. . .	. . .	8
67	18Cr–10Ni–Cb	Pipe	A312	TP347	S34700	. . .	. . .	8
68	18Cr–10Ni–Cb	Pipe	A358	347	S34700	. . .	. . .	8
69	18Cr–10Ni–Cb	Pipe	A376	TP347	S34700	. . .	. . .	8
70	18Cr–10Ni–Cb	Pipe	A409	TP347	S34700	. . .	. . .	8
71	18Cr–10Ni–Cb	Pipe	A312	TP348	S34800	. . .	. . .	8
72	18Cr–10Ni–Cb	Pipe	A358	348	S34800	. . .	. . .	8
73	18Cr–10Ni–Cb	Pipe	A376	TP348	S34800	. . .	. . .	8
74	18Cr–10Ni–Cb	Pipe	A409	TP348	S34800	. . .	. . .	8
75	18Cr–10Ni–Cb	Pipe	A312	TP347H	S34709	. . .	. . .	8
76	18Cr–10Ni–Cb	Pipe	A312	TP348H	S34809	. . .	. . .	8
77	18Cr–8Ni	Tube	A213	TP304	S30400	. . .	. . .	8
78	18Cr–8Ni	Tube	A269	TP304	S30400	. . .	. . .	8
79	18Cr–8Ni	Pipe	A312	TP304	S30400	. . .	. . .	8
80	18Cr–8Ni	Pipe	A358	304	S30400	. . .	. . .	8
81	18Cr–8Ni	Pipe	A376	TP304	S30400	. . .	. . .	8
82	18Cr–8Ni	Pipe	A376	TP304H	S30409	. . .	. . .	8
83	18Cr–8Ni	Pipe	A409	TP304	S30400	. . .	. . .	8
84	18Cr–8Ni	Pipe	A312	TP304H	S30409	. . .	. . .	8
85	18Cr–10Ni–Mo	Pipe & tube	A451	CPF8M	J92900	. . .	. . .	8
86	44Fe–25Ni–21Cr–Mo	Wld. tube	A249	904L	N08904	. . .	. . .	45
87	44Fe–25Ni–21Cr–Mo	Smls. & wld. pipe	A312	904L	N08904	. . .	. . .	45
88	20Cr–Cu	Tube	A268	TP443	S44300	. . .	. . .	10
89	27Cr	Tube	A268	TP446	S44600	. . .	. . .	10I
90	12Cr	Wld. pipe	A1053	50	S41003	. . .	. . .	7
91	24Cr–9Ni–N	Pipe & tube	A451	CPE20N	. . .	. . .	. . .	8
92	23Cr–4Ni–N	Pipe & tube	A789	. . .	S32304	. . .	. . .	10H
93	23Cr–4Ni–N	Pipe & tube	A790	. . .	S32304	. . .	. . .	10H
94	12¾Cr	Pipe & tube	A426	CPCA-15	J91150	. . .	. . .	6
95	22Cr–5Ni–3Mo	Pipe & tube	A789	. . .	S31803	. . .	. . .	10H
96	22Cr–5Ni–3Mo	Pipe & tube	A790	. . .	S31803	. . .	. . .	10H
97	26Cr–4Ni–Mo	Pipe & tube	A789	. . .	S32900	. . .	. . .	10H
98	26Cr–4Ni–Mo	Pipe & tube	A790	. . .	S32900	. . .	. . .	10H

Copyright © 2015 by the American Society of Mechanical Engineers.
No reproduction may be made of this material without written consent of ASME.

Table A-1M Basic Allowable Stresses in Tension for Metals (Metric) (Cont'd) (14)

Numbers in Parentheses Refer to Notes for Appendix A Tables; Specifications Are ASTM Unless Otherwise Indicated

Line No.	Notes	Min. Temp., °C (6)	Min. Tensile Strength, MPa	Min. Yield Strength, MPa	Max. Use Temp., °C	Basic Allowable Stress, *S*, MPa, at Metal Temperature, °C [Notes (1), (3), and (4b)] Min. Temp. to 40	65	100	125	150	175	200
66	(2)(30)(36)	−200	517	207	816	138	138	138	138	138	138	138
67	(2)(28)	−255	517	207	816	138	138	138	138	138	138	138
68	(2)(28)(30)(36)	−255	517	207	816	138	138	138	138	138	138	138
69	(2)(28)(30)(36)	−255	517	207	816	138	138	138	138	138	138	138
70	(2)(28)(30)(36)	−255	517	207	816	138	138	138	138	138	138	138
71	(2)(28)	−200	517	207	816	138	138	138	138	138	138	138
72	(2)(28)(30)(36)	−200	517	207	816	138	138	138	138	138	138	138
73	(2)(28)(30)(36)	−200	517	207	816	138	138	138	138	138	138	138
74	(2)(28)(30)(36)	−200	517	207	816	138	138	138	138	138	138	138
75	(2)	−200	517	207	816	138	138	138	138	138	138	138
76	(2)	−200	517	207	816	138	138	138	138	138	138	138
77	(2)(14)(26)(28)(31)(36)	−255	517	207	816	138	138	138	138	138	134	129
78	(2)(14)(26)(28)(31)(36)	−255	517	207	816	138	138	138	138	138	134	129
79	(2)(26)(28)	−255	517	207	816	138	138	138	138	138	134	129
80	(2)(26)(28)(31)(36)	−255	517	207	816	138	138	138	138	138	134	129
81	(2)(20)(26)(28)(31)(36)	−255	517	207	816	138	138	138	138	138	134	129
82	(2)(26)(31)(36)	−200	517	207	816	138	138	138	138	138	134	129
83	(2)(26)(28)(31)(36)	−255	517	207	816	138	138	138	138	138	134	129
84	(2)(26)	−200	517	207	816	138	138	138	138	138	134	129
85	(2)(26)(28)	−255	483	207	816	138	138	138	138	130	124	118
86	(26)	−200	490	220	260	143	143	143	143	141	135	130
87	(26)	−200	490	220	260	143	143	143	143	141	135	130
88	(2)(35)	−30	483	276	538	*161*	*161*	*161*	*161*	*161*	*161*	*161*
89	(2)(35)	−30	483	276	538	*161*	*161*	*161*	*158*	*155*	*153*	*152*
90	(2)	−30	485	350	316	162	162	162	162	162	161	159
91	(2)(35)(39)	−200	552	276	482	184	184	184	184	184	184	184
92	(2)(25)	−50	600	400	316	*200*	*200*	*191*	*185*	*180*	*175*	*171*
93	(2)(25)	−50	600	400	316	*200*	*200*	*191*	*185*	*180*	*175*	*171*
94	(2)(10)(35)	−30	621	448	40	*207*	...	...	...	...	...	...
95	(2)(25)	−50	621	448	316	*207*	*207*	*207*	*204*	*199*	*196*	*193*
96	(2)(25)	−50	621	448	316	*207*	*207*	*207*	*204*	*199*	*196*	*193*
97	(2)(25)	−30	621	483	40	*207*	...	...	...	...	...	...
98	(2)(25)	−30	621	483	40	*207*	...	...	...	...	...	...

Copyright © 2015 by the American Society of Mechanical Engineers.
No reproduction may be made of this material without written consent of ASME.

(14)

Table A-1M Basic Allowable Stresses in Tension for Metals (Metric) (Cont'd)

Numbers in Parentheses Refer to Notes for Appendix A Tables; Specifications Are ASTM Unless Otherwise Indicated

	Basic Allowable Stress, *S*, MPa, at Metal Temperature, °C [Notes (1), (3), and (4b)]												
Line No.	225	250	275	300	325	350	375	400	425	450	475	500	525
66	138	138	*137*	135	132	130	129	127	126	126	125	125	125
67	138	138	*137*	135	132	130	129	127	126	126	125	125	125
68	138	138	*137*	135	132	130	128	127	126	126	125	125	125
69	138	138	*137*	135	132	130	128	127	126	126	125	125	125
70	138	138	*137*	135	132	130	128	127	126	126	125	125	125
71	138	138	*137*	135	132	130	128	127	126	126	125	125	125
72	138	138	*137*	135	132	130	128	127	126	126	125	125	125
73	138	138	*137*	135	132	130	128	127	126	126	125	125	125
74	138	138	*137*	135	132	130	128	127	126	126	125	125	125
75	138	138	*137*	135	132	130	129	127	126	126	125	125	125
76	138	138	*137*	135	132	130	129	127	126	126	125	125	125
77	125	122	119	116	113	111	109	107	105	103	101	99.1	97.3
78	125	122	119	116	113	111	109	107	105	103	101	99.1	97.3
79	125	122	119	116	113	111	109	107	105	103	101	99.1	97.3
80	125	122	119	116	113	111	109	107	105	103	101	99.1	97.3
81	125	122	119	116	113	111	109	107	105	103	101	99.1	97.3
82	125	122	119	116	113	111	109	107	105	103	101	99.1	97.3
83	125	122	119	116	113	111	109	107	105	103	101	99.1	97.3
84	125	122	119	116	113	111	109	107	105	103	101	99.1	97.3
85	114	110	107	104	102	101	99.3	98.1	97.0	95.9	94.7	93.3	91.5
86	125	120	116	...	...	...	...	...	...	...	...	...	...
87	125	120	116	...	...	...	...	...	...	...	...	...	...
88	*161*	*161*	*161*	*161*	*161*	**97.0**	**84.3**	**73.3**	**64.0**	**55.8**	**43.9**	**31.7**	**21.4**
89	*150*	*149*	*147*	*145*	*144*	*141*	*139*	*136*	*132*	*128*	*122*	*116*	*109*
90	156	154	152	149	146	...	...	...	...	...	...	...	...
91	184	184	184	184	184	184	184	184	184	184	184	184	...
92	*166*	*161*	*153*	*143*	111	...	...	...	...	...	...	...	...
93	*166*	*161*	*153*	*143*	111	...	...	...	...	...	...	...	...
94	...	...	...	...	...	...	...	...	...	...	...	...	...
95	*190*	*188*	*187*	*186*	*185*	...	...	...	...	...	...	...	...
96	*190*	*188*	*187*	*186*	*185*	...	...	...	...	...	...	...	...
97	...	...	...	...	...	...	...	...	...	...	...	...	...
98	...	...	...	...	...	...	...	...	...	...	...	...	...

Copyright © 2015 by the American Society of Mechanical Engineers.
No reproduction may be made of this material without written consent of ASME.

Table A-1M Basic Allowable Stresses in Tension for Metals (Metric) (Cont'd) (14)

Numbers in Parentheses Refer to Notes for Appendix A Tables; Specifications Are ASTM Unless Otherwise Indicated

	Basic Allowable Stress, *S*, MPa, at Metal Temperature, °C [Notes (1), (3), and (4b)]											
Line No.	550	575	600	625	650	675	700	725	750	775	800	825
66	125	112	90.6	69.6	53.8	41.4	31.8	24.0	18.8	14.6	10.9	8.96
67	125	112	90.6	69.6	53.8	41.4	31.8	24.0	18.8	14.6	10.9	8.96
68	125	112	90.6	69.6	53.8	41.4	31.8	24.0	18.8	14.6	10.9	8.96
69	125	112	90.6	69.6	53.8	41.4	31.8	24.0	18.8	14.6	10.9	8.96
70	125	112	90.6	69.6	53.8	41.4	31.8	24.0	18.8	14.6	10.9	8.96
71	125	112	90.6	69.6	53.8	41.4	31.8	24.0	18.8	14.6	10.9	8.96
72	125	112	90.6	69.6	53.8	41.4	31.8	24.0	18.8	14.6	10.9	8.96
73	125	112	90.6	69.6	53.8	41.4	31.8	24.0	18.8	14.6	10.9	8.96
74	125	112	90.6	69.6	53.8	41.4	31.8	24.0	18.8	14.6	10.9	8.96
75	125	112	90.6	69.6	53.8	41.4	31.8	24.0	18.8	14.6	10.9	8.96
76	125	112	90.6	69.6	53.8	41.4	31.8	24.0	18.8	14.6	10.9	8.96
77	95.5	78.9	63.8	51.6	41.6	32.9	26.5	21.3	17.2	14.1	11.2	9.65
78	95.5	78.9	63.8	51.6	41.6	32.9	26.5	21.3	17.2	14.1	11.2	9.65
79	95.5	78.9	63.8	51.6	41.6	32.9	26.5	21.3	17.2	14.1	11.2	9.65
80	95.5	78.9	63.8	51.6	41.6	32.9	26.5	21.3	17.2	14.1	11.2	9.65
81	95.5	78.9	63.8	51.6	41.6	32.9	26.5	21.3	17.2	14.1	11.2	9.65
82	95.5	78.9	63.8	51.6	41.6	32.9	26.5	21.3	17.2	14.1	11.2	9.65
83	95.5	78.9	63.8	51.6	41.6	32.9	26.5	21.3	17.2	14.1	11.2	9.65
84	95.5	78.9	63.8	51.6	41.6	32.9	26.5	21.3	17.2	14.1	11.2	9.65
85	89.1	72.7	57.7	46.0	36.9	30.1	24.3	20.3	17.0	14.3	12.1	11.0
86	...	...	...	...	...	...	...	...	...	...	...	...
87	...	...	...	...	...	...	...	...	...	...	...	...
88	17.2	...	...	...	...	...	...	...	...	...	...	...
89	*104*	...	...	...	...	...	...	...	...	...	...	...
90	...	...	...	...	...	...	...	...	...	...	...	...
91	...	...	...	...	...	...	...	...	...	...	...	...
92	...	...	...	...	...	...	...	...	...	...	...	...
93	...	...	...	...	...	...	...	...	...	...	...	...
94	...	...	...	...	...	...	...	...	...	...	...	...
95	...	...	...	...	...	...	...	...	...	...	...	...
96	...	...	...	...	...	...	...	...	...	...	...	...
97	...	...	...	...	...	...	...	...	...	...	...	...
98	...	...	...	...	...	...	...	...	...	...	...	...

Copyright © 2015 by the American Society of Mechanical Engineers.
No reproduction may be made of this material without written consent of ASME.

(14)

Table A-1M Basic Allowable Stresses in Tension for Metals (Metric) (Cont'd)

Numbers in Parentheses Refer to Notes for Appendix A Tables; Specifications Are ASTM Unless Otherwise Indicated

Line No.	Nominal Composition	Product Form	Spec. No.	Type/ Grade	UNS No.	Class/ Condition/ Temper	Size, mm	P-No. (5)
99	46Fe–24Ni–21Cr–6Mo–Cu–N	Smls. & wld. pipe	A312	. . .	N08367	. . .	> 5.0	45
100	46Fe–24Ni–21Cr–6Mo–Cu–N	Wld. pipe	A358	. . .	N08367	. . .	> 5.0	45
101	46Fe–24Ni–21Cr–6Mo–Cu–N	Wld. pipe	A813	. . .	N08367	. . .	> 5.0	45
102	46Fe–24Ni–21Cr–6Mo–Cu–N	Wld. pipe	A814	. . .	N08367	. . .	> 5.0	45
103	46Fe–24Ni–21Cr–6Mo–Cu–N	Smls. & wld. pipe	A312	. . .	N08367	. . .	≤ 5.0	45
104	46Fe–24Ni–21Cr–6Mo–Cu–N	Wld. pipe	A358	. . .	N08367	. . .	≤ 5.0	45
105	46Fe–24Ni–21Cr–6Mo–Cu–N	Wld. pipe	A813	. . .	N08367	. . .	≤ 5.0	45
106	46Fe–24Ni–21Cr–6Mo–Cu–N	Wld. pipe	A814	. . .	N08367	. . .	≤ 5.0	45
107	21Cr–3Ni–Mo	Pipe & tube	A790	. . .	S32003	. . .	> 5.0	10H
108	21Cr–3Ni–Mo	Pipe & tube	A789	. . .	S32003	. . .	≤ 5.0	10H
109	25Cr–8Ni–3Mo–W–Cu–N	Pipe & tube	A789	. . .	S32760	. . .	. . .	10H
110	25Cr–8Ni–3Mo–W–Cu–N	Pipe & tube	A790	. . .	S32760	. . .	. . .	10H
111	24Cr–17Ni–6Mn–4½Mo–N	Pipe & tube	A358	. . .	S34565	. . .	. . .	8
112	25Cr–7Ni–4Mo–N	Pipe & tube	A789	. . .	S32750	. . .	. . .	10H
113	25Cr–7Ni–4Mo–N	Pipe & tube	A790	2507	S32750	. . .	. . .	10H
114	18Cr–10Ni	Plate & sheet	A240	305	S30500	. . .	. . .	8
115	12Cr–Al	Plate & sheet	A240	405	S40500	. . .	. . .	7
116	18Cr–8Ni	Plate & sheet	A240	304L	S30403	. . .	. . .	8
117	16Cr–12Ni–2Mo	Plate & sheet	A240	316L	S31603	. . .	. . .	8
118	18Cr–Ti–Al	Plate & sheet	A240	X8M	. . .	. . .	. . .	. . .
119	18Cr–8Ni	Plate & sheet	A167	302B	S30215	. . .	. . .	8
120	18Cr–Ni	Plate & sheet	A240	302	S30200	. . .	. . .	8
121	12Cr	Plate, sheet, strip	A1010	40	S41003	. . .	. . .	7
122	12Cr	Plate, sheet, strip	A1010	50	S41003	. . .	. . .	7
123	13Cr	Plate & sheet	A240	410S	S41008	. . .	. . .	7
124	13Cr	Plate & sheet	A240	410	S41000	. . .	. . .	6
125	15Cr	Plate & sheet	A240	429	S42900	. . .	. . .	6
126	17Cr	Plate & sheet	A240	430	S43000	. . .	. . .	7
127	18Cr–13Ni–3Mo	Plate & sheet	A240	317L	S31703	. . .	. . .	8

Copyright © 2015 by the American Society of Mechanical Engineers.
No reproduction may be made of this material without written consent of ASME.

Table A-1M Basic Allowable Stresses in Tension for Metals (Metric) (Cont'd) (14)

Numbers in Parentheses Refer to Notes for Appendix A Tables; Specifications Are ASTM Unless Otherwise Indicated

Line No.	Notes	Min. Temp., °C (6)	Min. Tensile Strength, MPa	Min. Yield Strength, MPa	Max. Use Temp., °C	Basic Allowable Stress, *S*, MPa, at Metal Temperature, °C [Notes (1), (3), and (4b)] Min. Temp. to 40	65	100	125	150	175	200
99	(26)	−200	655	310	427	207	207	207	207	206	202	198
100	(26)	−200	655	310	427	207	207	207	207	206	202	198
101	(26)	−200	655	310	427	207	207	207	207	206	202	198
102	(26)	−200	655	310	427	207	207	207	207	206	202	198
103	(26)	−200	690	310	427	207	207	207	207	207	207	205
104	(26)	−200	690	310	427	207	207	207	207	207	207	205
105	(26)	−200	690	310	427	207	207	207	207	207	207	205
106	(26)	−200	690	310	427	207	207	207	207	207	207	205
107	(2)(25)	−50	655	450	343	218	218	210	203	199	197	197
108	(2)(25)	−50	690	485	343	230	230	221	214	209	207	207
109	(2)(25)	−50	752	552	...	...	...	...	...	...	...	...
110	(2)(25)	−50	752	552	40	*207*	...	...	...	...	...	...
111	(2)(36)	−200	793	414	...	...	...	...	...	...	...	...
112	(2)(25)	−50	800	550	316	*267*	*265*	*264*	*257*	*251*	*247*	*243*
113	(2)(25)	−50	800	550	316	*267*	*265*	*264*	*257*	*251*	*247*	*243*
114	(26)(36)(39)	−200	483	172	40	115	...	...	...	...	...	...
115	(35)	−30	414	172	538	115	109	105	103	102	101	100
116	(36)	−255	483	172	816	115	115	115	115	115	114	110
117	(36)	−255	483	172	816	115	115	115	115	115	113	109
118	(35)	−30	448	207	40	138	...	...	...	...	...	...
119	(26)(28)(31)(36)(39)	−200	517	207	510	138	138	138	138	138	134	129
120	(26)(36)	−200	517	207	538	138	138	138	138	138	134	129
121	...	−30	455	275	316	152	152	152	152	152	151	149
122	...	−30	485	350	316	162	162	162	162	162	161	159
123	(35)(50)	−30	414	207	649	*138*	130	126	124	122	121	120
124	(35)	−30	448	207	649	138	130	126	124	122	121	120
125	(35)	−30	448	207	649	138	130	126	124	122	121	120
126	(35)	−30	448	207	649	138	130	126	124	122	121	120
127	(36)	−200	517	207	454	138	138	138	138	138	136	131

Copyright © 2015 by the American Society of Mechanical Engineers.
No reproduction may be made of this material without written consent of ASME.

(14)

Table A-1M Basic Allowable Stresses in Tension for Metals (Metric) (Cont'd)

Numbers in Parentheses Refer to Notes for Appendix A Tables; Specifications Are ASTM Unless Otherwise Indicated

	Basic Allowable Stress, *S*, MPa, at Metal Temperature, °C [Notes (1), (3), and (4b)]												
Line No.	225	250	275	300	325	350	375	400	425	450	475	500	525
99	195	192	188	184	179	176	173	170	167	166	...	...	...
100	195	192	188	184	179	176	173	170	167	166	...	...	...
101	195	192	188	184	179	176	173	170	167	166	...	...	...
102	195	192	188	184	179	176	173	170	167	166	...	...	...
103	199	194	188	184	179	176	173	170	167	166	...	...	...
104	199	194	188	184	179	176	173	170	167	166	...	...	...
105	199	194	188	184	179	176	173	170	167	166	...	...	...
106	199	194	188	184	179	176	173	170	167	166	...	...	...
107	197	197	197	197	197	197	...	...	...	...	...	...	...
108	207	207	207	207	207	207	...	...	...	...	...	...	...
109	...	...	...	...	...	...	...	...	...	...	...	...	...
110	...	...	...	...	...	...	...	...	...	...	...	...	...
111	...	...	...	...	...	...	...	...	...	...	...	...	...
112	*241*	*238*	*237*	*237*	*236*	...	...	...	...	...	...	...	...
113	*241*	*238*	*237*	*237*	*236*	...	...	...	...	...	...	...	...
114	...	...	...	...	...	...	...	...	...	...	...	...	...
115	99.7	99.1	98.4	97.5	96.2	94.7	92.6	90.1	87.0	83.4	79.2	**70.1**	**38.8**
116	106	103	99.9	97.7	95.7	94.1	92.6	91.3	90.0	88.7	87.3	85.6	83.7
117	106	103	100	98.1	96.1	94.3	92.6	90.9	89.3	87.6	85.9	84.2	82.5
118	...	...	...	...	...	...	...	...	...	...	...	...	...
119	125	122	119	116	113	111	109	107	105	103	101	99.1	97.3
120	125	122	119	116	113	111	109	107	105	103	101	99.1	97.3
121	147	145	142	140	137	...	...	...	...	...	...	...	...
122	156	154	152	149	146	...	...	...	...	...	...	...	...
123	120	119	118	117	115	114	111	108	104	100	**92.5**	**68.4**	**51.1**
124	120	119	118	117	115	114	111	108	104	100	**92.5**	**68.4**	**51.1**
125	120	119	118	117	115	114	111	108	104	100	**88.7**	**69.8**	**52.6**
126	120	119	118	117	115	114	111	108	104	100	**88.7**	**69.8**	**52.6**
127	127	123	120	118	115	113	111	109	107	105	103	...	...

Copyright © 2015 by the American Society of Mechanical Engineers.
No reproduction may be made of this material without written consent of ASME.

Table A-1M Basic Allowable Stresses in Tension for Metals (Metric) (Cont'd) (14)

Numbers in Parentheses Refer to Notes for Appendix A Tables; Specifications Are ASTM Unless Otherwise Indicated

	Basic Allowable Stress, *S*, MPa, at Metal Temperature, °C [Notes (1), (3), and (4b)]											
Line No.	550	575	600	625	650	675	700	725	750	775	800	825
99	...	...	...	...	...	...	...	...	...	...	...	...
100	...	...	...	...	...	...	...	...	...	...	...	...
101	...	...	...	...	...	...	...	...	...	...	...	...
102	...	...	...	...	...	...	...	...	...	...	...	...
103	...	...	...	...	...	...	...	...	...	...	...	...
104	...	...	...	...	...	...	...	...	...	...	...	...
105	...	...	...	...	...	...	...	...	...	...	...	...
106	...	...	...	...	...	...	...	...	...	...	...	...
107	...	...	...	...	...	...	...	...	...	...	...	...
108	...	...	...	...	...	...	...	...	...	...	...	...
109	...	...	...	...	...	...	...	...	...	...	...	...
110	...	...	...	...	...	...	...	...	...	...	...	...
111	...	...	...	...	...	...	...	...	...	...	...	...
112	...	...	...	...	...	...	...	...	...	...	...	...
113	...	...	...	...	...	...	...	...	...	...	...	...
114	...	...	...	...	...	...	...	...	...	...	...	...
115	**27.6**	...	...	...	...	...	...	...	...	...	...	...
116	81.4	**40.4**	**33.2**	**26.7**	**21.9**	**18.2**	**15.0**	**12.4**	**8.87**	**7.20**	**6.58**	**6.21**
117	80.8	**73.0**	**67.9**	**58.0**	**43.6**	**33.0**	**25.3**	**18.8**	**14.0**	**10.4**	**7.99**	**6.89**
118	...	...	...	...	...	...	...	...	...	...	...	...
119	...	...	...	...	...	...	...	...	...	...	...	...
120	96.4	...	...	...	...	...	...	...	...	...	...	...
121	...	...	...	...	...	...	...	...	...	...	...	...
122	...	...	...	...	...	...	...	...	...	...	...	...
123	**37.4**	**26.3**	**17.8**	**11.4**	**6.89**	...	...	...	...	...	...	...
124	**37.4**	**26.3**	**17.8**	**11.4**	**6.89**	...	...	...	...	...	...	...
125	**38.1**	**27.6**	**20.6**	**15.9**	**12.4**	...	...	...	...	...	...	...
126	**38.1**	**27.6**	**20.6**	**15.9**	**12.4**	...	...	...	...	...	...	...
127	...	...	...	...	...	...	...	...	...	...	...	...

Copyright © 2015 by the American Society of Mechanical Engineers.
No reproduction may be made of this material without written consent of ASME.

(14)

Table A-1M Basic Allowable Stresses in Tension for Metals (Metric) (Cont'd)

Numbers in Parentheses Refer to Notes for Appendix A Tables; Specifications Are ASTM Unless Otherwise Indicated

Line No.	Nominal Composition	Product Form	Spec. No.	Type/ Grade	UNS No.	Class/ Condition/ Temper	Size, mm	P-No. (5)
128	25Cr–20Ni	Plate & sheet	A167	310	S31000	. . .	. . .	8
129	25Cr–20Ni	Plate & sheet	A240	310S	S31008	. . .	. . .	8
130	18Cr–10Ni–Ti	Plate & sheet	A240	321	S32100	. . .	. . .	8
131	20Cr–10Ni	Plate & sheet	A167	308	S30800	. . .	. . .	8
132	23Cr–12Ni	Plate & sheet	A167	309	S30900	. . .	. . .	8
133	23Cr–12Ni	Plate & sheet	A240	309S	S30908	. . .	. . .	8
134	18Cr–10Ni–Cb	Plate & sheet	A240	347	S34700	. . .	. . .	8
135	18Cr–10Ni–Cb	Plate & sheet	A240	348	S34800	. . .	. . .	8
136	25Cr–20Ni	Plate & sheet	A167	310	S31000	. . .	. . .	8
137	25Cr–20Ni	Plate & sheet	A240	310S	S31008	. . .	. . .	8
138	18Cr–10Ni–Ti	Plate & sheet	A240	321	S32100	. . .	. . .	8
139	18Cr–10Ni–Ti	Plate & sheet	A240	321H	S32109	. . .	. . .	8
140	16Cr–12Ni–2Mo	Plate & sheet	A240	316	S31600	. . .	. . .	8
141	18Cr–13Ni–3Mo	Plate & sheet	A240	317	S31700	. . .	. . .	8
142	18Cr–10Ni–Cb	Plate & sheet	A167	347	. . .	. . .	. . .	8
143	18Cr–10Ni–Cb	Plate & sheet	A240	347	S34700	. . .	. . .	8
144	18Cr–10Ni–Cb	Plate & sheet	A167	348	. . .	. . .	. . .	8
145	18Cr–10Ni–Cb	Plate & sheet	A240	348	S34800	. . .	. . .	8
146	18Cr–8Ni	Plate & sheet	A240	304	S30400	. . .	. . .	8
147	44Fe–25Ni–21Cr–Mo	Plate & sheet	A240	904L	N08904	. . .	. . .	45
148	16Cr–4Ni–6Mn–N	Plate & sheet	A240	201LN	S20153	. . .	. . .	8
149	46Fe–24Ni–21Cr–6Mo–Cu–N	Plates	A240	. . .	N08367	. . .	> 5.0	45
150	46Fe–24Ni–21Cr–6Mo–Cu–N	Sheet & strip	A240	. . .	N08367	. . .	≤ 5.0	45
151	21Cr–3Ni–Mo	Plate & sheet	A240	. . .	S32003	. . .	> 5.0	10H
152	21Cr–3Ni–Mo	Plate & sheet	A240	. . .	S32003	. . .	≤ 5.0	10H
153	25Cr–8Ni–3Mo–W–Cu–N	Plate & sheet	A240	. . .	S32760	. . .	. . .	10H
154	25Cr–7Ni–4Mo–N	Plate & sheet	A240	2507	S32750	. . .	. . .	10H
155	18Cr–13Ni–3Mo	Forgings & fittings	A182	F317L	S31703	. . .	≤ 125	8

Copyright © 2015 by the American Society of Mechanical Engineers.
No reproduction may be made of this material without written consent of ASME.

Table A-1M Basic Allowable Stresses in Tension for Metals (Metric) (Cont'd) (14)

Numbers in Parentheses Refer to Notes for Appendix A Tables; Specifications Are ASTM Unless Otherwise Indicated

Line No.	Notes	Min. Temp., °C (6)	Min. Tensile Strength, MPa	Min. Yield Strength, MPa	Max. Use Temp., °C	Basic Allowable Stress, *S*, MPa, at Metal Temperature, °C [Notes (1), (3), and (4b)] Min. Temp. to 40	65	100	125	150	175	200
128	(28)(35)(36)(39)	−200	517	207	816	138	138	138	138	138	138	138
129	(28)(35)(36)	−200	517	207	816	138	138	138	138	138	138	138
130	(30)(36)	−200	517	207	816	138	138	138	138	138	138	138
131	(6)(26)(31)(39)	−200	517	207	800	138	138	138	138	138	134	129
132	(12)(28)(31)(35)(36)(39)	−200	517	207	816	138	138	138	138	138	138	138
133	(28)(35)(36)	−200	517	207	816	138	138	138	138	138	138	138
134	(36)	−255	517	207	816	138	138	138	138	138	138	138
135	(36)	−200	517	207	816	138	138	138	138	138	138	138
136	(28)(29)(35)(36)(39)	−200	517	207	816	138	138	138	138	138	138	138
137	(28)(29)(35)(36)	−200	517	207	816	138	138	138	138	138	138	138
138	(28)(30)(36)	−200	517	207	816	138	138	138	138	138	138	138
139	(36)	−200	517	207	816	138	138	138	138	138	138	138
140	(26)(28)(36)	−255	517	207	816	138	138	138	138	138	138	134
141	(26)(28)(36)	−200	517	207	816	138	138	138	138	138	138	134
142	(28)(30)(36)	−255	517	207	816	138	138	138	138	138	138	138
143	(28)(36)	−255	517	207	816	138	138	138	138	138	138	138
144	(28)(30)(36)	−200	517	207	816	138	138	138	138	138	138	138
145	(28)(36)	−200	517	207	816	138	138	138	138	138	138	138
146	(26)(28)(36)	−255	517	207	816	138	138	138	138	138	134	129
147	(26)	−200	490	220	260	143	143	143	143	141	135	130
148	. . .	−200	655	310	454	207	*206*	*187*	*177*	*170*	*165*	*162*
149	(26)	−200	655	310	427	207	207	207	207	206	202	198
150	(26)	−200	690	310	427	207	207	207	207	207	207	205
151	(25)	−50	655	450	343	218	218	210	203	199	197	197
152	(25)	−50	690	485	343	230	230	221	214	209	207	207
153	(25)	−50	752	552	316	*251*	*251*	*249*	*244*	*239*	*237*	*235*
154	(25)	−50	800	550	316	*267*	*265*	*264*	*257*	*251*	*247*	*243*
155	(2)(9)(21a)	−200	483	172	454	115	115	115	115	115	113	109

Copyright © 2015 by the American Society of Mechanical Engineers.
No reproduction may be made of this material without written consent of ASME.

(14)

Table A-1M Basic Allowable Stresses in Tension for Metals (Metric) (Cont'd)

Numbers in Parentheses Refer to Notes for Appendix A Tables; Specifications Are ASTM Unless Otherwise Indicated

	Basic Allowable Stress, *S*, MPa, at Metal Temperature, °C [Notes (1), (3), and (4b)]												
Line No.	225	250	275	300	325	350	375	400	425	450	475	500	525
128	137	134	131	129	127	125	123	122	120	119	117	116	**84.9**
129	137	134	131	129	127	125	123	122	120	119	117	116	**84.9**
130	138	135	131	128	125	123	120	119	117	116	114	113	112
131	125	122	119	116	113	**97.0**	**84.3**	**73.3**	**64.0**	**55.8**	**43.9**	**31.7**	**21.4**
132	138	135	133	131	129	127	125	124	122	121	119	117	**108**
133	138	135	133	131	129	127	125	124	122	121	119	117	**108**
134	138	138	*137*	135	132	130	128	127	126	126	125	125	125
135	138	138	*137*	135	132	130	128	127	126	126	125	125	125
136	137	134	131	129	127	125	123	122	120	119	117	116	**108**
137	137	134	131	129	127	125	123	122	120	119	117	116	**108**
138	138	135	131	128	125	123	120	119	117	116	114	113	112
139	138	135	131	128	125	123	120	119	117	116	114	113	112
140	129	125	122	119	116	114	112	111	110	109	108	107	106
141	129	125	122	119	116	114	112	111	110	109	108	107	106
142	138	138	*137*	135	132	130	128	127	126	126	125	125	125
143	138	138	*137*	135	132	130	128	127	126	126	125	125	125
144	138	138	*137*	135	132	130	128	127	126	126	125	125	125
145	138	138	*137*	135	132	130	128	127	126	126	125	125	125
146	125	122	119	116	113	111	109	107	105	103	101	99.1	97.3
147	125	120	116	...	...	...	...	...	...	...	...	...	...
148	*160*	*159*	*158*	*158*	*158*	*157*	*156*	*154*	*152*	*149*	*146*	...	...
149	195	192	188	184	179	176	173	170	167	166	...	...	...
150	199	194	188	184	179	176	173	170	167	166	...	...	...
151	197	197	197	197	197	197	...	...	...	...	...	...	...
152	207	207	207	207	207	207	...	...	...	...	...	...	...
153	*234*	*234*	*234*	*234*	*234*	...	...	...	...	...	...	...	...
154	*241*	*238*	*237*	*237*	*236*	...	...	...	...	...	...	...	...
155	106	103	100	98.1	96.1	94.3	92.6	90.9	89.3	87.6	85.9	...	...

Copyright © 2015 by the American Society of Mechanical Engineers.
No reproduction may be made of this material without written consent of ASME.

Table A-1M Basic Allowable Stresses in Tension for Metals (Metric) (Cont'd) (14)

Numbers in Parentheses Refer to Notes for Appendix A Tables; Specifications Are ASTM Unless Otherwise Indicated

	Basic Allowable Stress, *S*, MPa, at Metal Temperature, °C [Notes (1), (3), and (4b)]											
Line No.	550	575	600	625	650	675	700	725	750	775	800	825
128	59.0	43.5	31.9	23.6	16.9	10.7	6.10	3.90	2.99	2.36	1.73	1.38
129	59.0	43.5	31.9	23.6	16.9	10.7	6.10	3.90	2.99	2.36	1.73	1.38
130	88.7	59.2	44.0	32.9	24.5	18.3	12.5	8.49	6.19	4.28	2.75	2.07
131	14.2	9.40	6.16	4.03	2.64	1.73	1.13	0.74	0.49	0.32	0.21	...
132	83.7	64.0	48.5	36.3	27.3	21.0	15.9	12.5	9.87	7.65	5.97	5.17
133	83.7	64.0	48.5	36.3	27.3	21.0	15.9	12.5	9.87	7.65	5.97	5.17
134	97.6	75.9	57.2	40.2	30.3	23.2	16.2	11.4	8.97	7.08	5.89	5.52
135	97.6	75.9	57.2	40.2	30.3	23.2	16.2	11.4	8.97	7.08	5.89	5.52
136	83.7	64.0	48.5	36.3	27.3	21.0	15.9	12.5	9.87	7.65	5.97	5.17
137	83.7	64.0	48.5	36.3	27.3	21.0	15.9	12.5	9.87	7.65	5.97	5.17
138	100	76.5	58.7	46.0	36.8	28.7	23.0	18.4	14.5	11.5	9.02	7.58
139	100	76.5	58.7	46.0	36.8	28.7	23.0	18.4	14.5	11.5	9.02	7.58
140	105	97.8	80.8	65.0	50.4	38.6	29.6	23.0	17.4	13.3	10.4	8.96
141	105	97.8	80.8	65.0	50.4	38.6	29.6	23.0	17.4	13.3	10.4	8.96
142	125	112	90.6	69.6	53.8	41.4	31.8	24.0	18.8	14.6	10.9	8.96
143	125	112	90.6	69.6	53.8	41.4	31.8	24.0	18.8	14.6	10.9	8.96
144	125	112	90.6	69.6	53.8	41.4	31.8	24.0	18.8	14.6	10.9	8.96
145	125	112	90.6	69.6	53.8	41.4	31.8	24.0	18.8	14.6	10.9	8.96
146	95.5	78.9	63.8	51.6	41.6	32.9	26.5	21.3	17.2	14.1	11.2	9.65
147	...	...	...	...	...	...	...	...	...	...	...	...
148	...	...	...	...	...	...	...	...	...	...	...	...
149	...	...	...	...	...	...	...	...	...	...	...	...
150	...	...	...	...	...	...	...	...	...	...	...	...
151	...	...	...	...	...	...	...	...	...	...	...	...
152	...	...	...	...	...	...	...	...	...	...	...	...
153	...	...	...	...	...	...	...	...	...	...	...	...
154	...	...	...	...	...	...	...	...	...	...	...	...
155	...	...	...	...	...	...	...	...	...	...	...	...

Copyright © 2015 by the American Society of Mechanical Engineers.
No reproduction may be made of this material without written consent of ASME.

Table A-1M Basic Allowable Stresses in Tension for Metals (Metric) (Cont'd)

Numbers in Parentheses Refer to Notes for Appendix A Tables; Specifications Are ASTM Unless Otherwise Indicated

Line No.	Nominal Composition	Product Form	Spec. No.	Type/ Grade	UNS No.	Class/ Condition/ Temper	Size, mm	P-No. (5)
156	18Cr–8Ni	Forgings & fittings	A182	F304L	S30403	. . .	. . .	8
157	18Cr–8Ni	Forgings & fittings	A403	WP304L	S30403	. . .	. . .	8
158	16Cr–12Ni–2Mo	Forgings & fittings	A182	F316L	S31603	. . .	. . .	8
159	16Cr–12Ni–2Mo	Forgings & fittings	A403	WP316L	S31603	. . .	. . .	8
160	20Ni–8Cr	Forgings & fittings	A182	F10	S33100	. . .	. . .	8
161	18Cr–13Ni–3Mo	Forgings & fittings	A403	WP317L	S31703	. . .	. . .	8
162	25Cr–20Ni	Forgings & fittings	A182	F310	S31000	. . .	. . .	8
163	25Cr–20Ni	Forgings & fittings	A403	WP310	S31008	. . .	. . .	8
164	18Cr–10Ni–Ti	Forgings & fittings	A182	F321	S32100	. . .	. . .	8
165	18Cr–10Ni–Ti	Forgings & fittings	A403	WP321	S32100	. . .	. . .	8
166	23Cr–12Ni	Forgings & fittings	A403	WP309	S30900	. . .	. . .	8
167	25Cr–20Ni	Forgings & fittings	A182	F310	S31000	. . .	. . .	8
168	25Cr–20Ni	Forgings & fittings	A403	WP310	S31008	. . .	. . .	8
169	18Cr–10Ni–Cb	Forgings & fittings	A182	F347	S34700	. . .	. . .	8
170	18Cr–10Ni–Cb	Forgings & fittings	A403	WP347	S34700	. . .	. . .	8
171	18Cr–10Ni–Cb	Forgings & fittings	A182	F348	S34800	. . .	. . .	8
172	18Cr–10Ni–Cb	Forgings & fittings	A403	WP348	S34800	. . .	. . .	8
173	18Cr–10Ni–Ti	Forgings & fittings	A182	F321	S32100	. . .	. . .	8
174	18Cr–10Ni–Ti	Forgings & fittings	A182	F321H	S32109	. . .	. . .	8
175	18Cr–10Ni–Ti	Forgings & fittings	A403	WP321	S32100	. . .	. . .	8
176	18Cr–10Ni–Ti	Forgings & fittings	A403	WP321H	S32109	. . .	. . .	8
177	16Cr–12Ni–2Mo	Forgings & fittings	A403	WP316H	S31609	. . .	. . .	8
178	16Cr–12Ni–2Mo	Forgings & fittings	A182	F316H	S31609	. . .	. . .	8
179	18Cr–10Ni–Cb	Forgings & fittings	A403	WP347H	S34709	. . .	. . .	8
180	18Cr–10Ni–Cb	Forgings & fittings	A182	F347	S34700	. . .	. . .	8
181	18Cr–10Ni–Cb	Forgings & fittings	A403	WP347	S34700	. . .	. . .	8
182	18Cr–10Ni–Cb	Forgings & fittings	A182	F348	S34800	. . .	. . .	8
183	18Cr–10Ni–Cb	Forgings & fittings	A403	WP348	S34800	. . .	. . .	8

Copyright © 2015 by the American Society of Mechanical Engineers.
No reproduction may be made of this material without written consent of ASME.

Table A-1M Basic Allowable Stresses in Tension for Metals (Metric) (Cont'd) (14)

Numbers in Parentheses Refer to Notes for Appendix A Tables; Specifications Are ASTM Unless Otherwise Indicated

Line No.	Notes	Min. Temp., °C (6)	Min. Tensile Strength, MPa	Min. Yield Strength, MPa	Max. Use Temp., °C	Basic Allowable Stress, *S*, MPa, at Metal Temperature, °C [Notes (1), (3), and (4b)] Min. Temp. to 40	65	100	125	150	175	200
156	(2)(9)(21a)	−255	483	172	816	115	115	115	115	115	114	110
157	(2)(32)(37)	−255	483	172	816	115	115	115	115	115	114	110
158	(2)(9)(21a)	−255	483	172	816	115	115	115	115	115	113	109
159	(2)(32)(37)	−255	483	172	816	115	115	115	115	115	113	109
160	(2)(26)(28)(39)	−200	552	207	40	138	. . .	. . .	. . .	. . .	. . .	. . .
161	(2)(32)(37)	−200	517	207	454	138	138	138	138	138	136	131
162	(2)(9)(21)(28)(35)(39)	−200	517	207	816	138	138	138	138	138	138	138
163	(2)(28)(32)(35)(37)(39)	−200	517	207	816	138	138	138	138	138	138	138
164	(2)(9)(21)	−200	517	207	816	138	138	138	138	138	138	138
165	(2)(32)(37)	−200	517	207	816	138	138	138	138	138	138	138
166	(2)(28)(32)(35)(37)(39)	−200	517	207	816	138	138	138	138	138	138	138
167	(2)(9)(21)(28)(29)(35)(39)	−200	517	207	816	138	138	138	138	138	138	138
168	(2)(28)(29)(32)(35)(37)(39)	−200	517	207	816	138	138	138	138	138	138	138
169	(2)(9)(21)	−255	517	207	816	138	138	138	138	138	138	138
170	(2)(32)(37)	−255	517	207	816	138	138	138	138	138	138	138
171	(2)(9)(21)	−200	517	207	816	138	138	138	138	138	138	138
172	(2)(32)(37)	−200	517	207	816	138	138	138	138	138	138	138
173	(2)(9)(21)(28)(30)	−200	517	207	816	138	138	138	138	138	138	138
174	(2)(9)(21)	−200	517	207	816	138	138	138	138	138	138	138
175	(2)(28)(30)(32)(37)	−200	517	207	816	138	138	138	138	138	138	138
176	(2)(32)(37)	−200	517	207	816	138	138	138	138	138	138	138
177	(2)(26)(32)(37)	−200	517	207	816	138	138	138	138	138	138	134
178	(2)(9)(21)(26)	−200	517	207	816	138	138	138	138	138	138	134
179	(2)(32)(37)	−200	517	207	816	138	138	138	138	138	138	138
180	(2)(9)(21)(28)	−255	517	207	816	138	138	138	138	138	138	138
181	(2)(28)(32)(37)	−255	517	207	816	138	138	138	138	138	138	138
182	(2)(9)(21)(28)	−200	517	207	816	138	138	138	138	138	138	138
183	(2)(28)(32)(37)	−200	517	207	816	138	138	138	138	138	138	138

Copyright © 2015 by the American Society of Mechanical Engineers.
No reproduction may be made of this material without written consent of ASME.

(14)

Table A-1M Basic Allowable Stresses in Tension for Metals (Metric) (Cont'd)

Numbers in Parentheses Refer to Notes for Appendix A Tables; Specifications Are ASTM Unless Otherwise Indicated

	Basic Allowable Stress, *S*, MPa, at Metal Temperature, °C [Notes (1), (3), and (4b)]												
Line No.	225	250	275	300	325	350	375	400	425	450	475	500	525
156	106	103	*99.9*	97.7	95.7	94.1	92.6	91.3	90.0	88.7	87.3	85.6	83.7
157	106	103	*99.9*	97.7	95.7	94.1	92.6	91.3	90.0	88.7	87.3	85.6	83.7
158	106	103	100	98.1	96.1	94.3	92.6	90.9	89.3	87.6	85.9	84.2	82.5
159	106	103	100	98.1	96.1	94.3	92.6	90.9	89.3	87.6	85.9	84.2	82.5
160	...	...	...	...	...	...	...	...	...	...	...	...	...
161	127	123	120	118	115	113	111	109	107	105	103	...	...
162	137	134	131	129	127	125	123	122	120	119	117	116	**84.9**
163	137	134	131	129	127	125	123	122	120	119	117	116	**84.9**
164	138	135	131	128	125	123	120	119	117	116	114	113	112
165	138	135	131	128	125	123	120	119	117	116	114	113	112
166	138	135	133	131	129	127	125	124	122	121	119	117	**108**
167	137	134	131	129	127	125	123	122	120	119	117	116	**108**
168	137	134	131	129	127	125	123	122	120	119	117	116	**108**
169	138	138	*137*	135	132	130	128	127	126	126	125	125	125
170	138	138	*137*	135	132	130	128	127	126	126	125	125	125
171	138	138	*137*	135	132	130	128	127	126	126	125	125	125
172	138	138	*137*	135	132	130	128	127	126	126	125	125	125
173	138	135	131	128	125	123	120	119	117	116	114	113	112
174	138	135	131	128	125	123	120	119	117	116	114	113	112
175	138	135	131	128	125	123	120	119	117	116	114	113	112
176	138	135	131	128	125	123	120	119	117	116	114	113	112
177	129	125	122	119	116	114	112	111	110	109	108	107	106
178	129	125	122	119	116	114	112	111	110	109	108	107	106
179	138	138	*137*	135	132	130	129	127	126	126	125	125	125
180	138	138	*137*	135	132	130	128	127	126	126	125	125	125
181	138	138	*137*	135	132	130	129	127	126	126	125	125	125
182	138	138	*137*	135	132	130	128	127	126	126	125	125	125
183	138	138	*137*	135	132	130	128	127	126	126	125	125	125

Copyright © 2015 by the American Society of Mechanical Engineers.
No reproduction may be made of this material without written consent of ASME.

Table A-1M Basic Allowable Stresses in Tension for Metals (Metric) (Cont'd) (14)

Numbers in Parentheses Refer to Notes for Appendix A Tables; Specifications Are ASTM Unless Otherwise Indicated

	Basic Allowable Stress, *S*, MPa, at Metal Temperature, °C [Notes (1), (3), and (4b)]											
Line No.	550	575	600	625	650	675	700	725	750	775	800	825
156	81.4	40.4	33.2	26.7	21.9	18.2	15.0	12.4	8.87	7.20	6.58	6.21
157	81.4	40.4	33.2	26.7	21.9	18.2	15.0	12.4	8.87	7.20	6.58	6.21
158	80.8	73.0	67.9	58.0	43.6	33.0	25.3	18.8	14.0	10.4	7.99	6.89
159	80.8	73.0	67.9	58.0	43.6	33.0	25.3	18.8	14.0	10.4	7.99	6.89
160	...	...	...	...	...	...	...	...	...	...	...	...
161	...	...	...	...	...	...	...	...	...	...	...	...
162	59.0	43.5	31.9	23.6	16.9	10.7	6.10	3.90	2.99	2.36	1.73	1.38
163	59.0	43.5	31.9	23.6	16.9	10.7	6.10	3.90	2.99	2.36	1.73	1.38
164	88.7	59.2	44.0	32.9	24.5	18.3	12.5	8.49	6.19	4.28	2.75	2.07
165	88.7	59.2	44.0	32.9	24.5	18.3	12.5	8.49	6.19	4.28	2.75	2.07
166	83.7	64.0	48.5	36.3	27.3	21.0	15.9	12.5	9.87	7.65	5.97	5.17
167	83.7	64.0	48.5	36.3	27.3	21.0	15.9	12.5	9.87	7.65	5.97	5.17
168	83.7	64.0	48.5	36.3	27.3	21.0	15.9	12.5	9.87	7.65	5.97	5.17
169	97.6	75.9	57.2	40.2	30.3	23.2	16.2	11.4	8.97	7.08	5.89	5.52
170	97.6	75.9	57.2	40.2	30.3	23.2	16.2	11.4	8.97	7.08	5.89	5.52
171	97.6	75.9	57.2	40.2	30.3	23.2	16.2	11.4	8.97	7.08	5.89	5.52
172	97.6	75.9	57.2	40.2	30.3	23.2	16.2	11.4	8.97	7.08	5.89	5.52
173	100	76.5	58.7	46.0	36.8	28.7	23.0	18.4	14.5	11.5	9.02	7.58
174	100	76.5	58.7	46.0	36.8	28.7	23.0	18.4	14.5	11.5	9.02	7.58
175	100	76.5	58.7	46.0	36.8	28.7	23.0	18.4	14.5	11.5	9.02	7.58
176	100	76.5	58.7	46.0	36.8	28.7	23.0	18.4	14.5	11.5	9.02	7.58
177	105	97.8	80.8	65.0	50.4	38.6	29.6	23.0	17.4	13.3	10.4	8.96
178	105	97.8	80.8	65.0	50.4	38.6	29.6	23.0	17.4	13.3	10.4	8.96
179	125	112	90.6	69.6	53.8	41.4	31.8	24.0	18.8	14.6	10.9	8.96
180	125	112	90.6	69.6	53.8	41.4	31.8	24.0	18.8	14.6	10.9	8.96
181	125	112	90.6	69.6	53.8	41.4	31.8	24.0	18.8	14.6	10.9	8.96
182	125	112	90.6	69.6	53.8	41.4	31.8	24.0	18.8	14.6	10.9	8.96
183	125	112	90.6	69.6	53.8	41.4	31.8	24.0	18.8	14.6	10.9	8.96

Copyright © 2015 by the American Society of Mechanical Engineers.
No reproduction may be made of this material without written consent of ASME.

(14)

Table A-1M Basic Allowable Stresses in Tension for Metals (Metric) (Cont'd)

Numbers in Parentheses Refer to Notes for Appendix A Tables; Specifications Are ASTM Unless Otherwise Indicated

Line No.	Nominal Composition	Product Form	Spec. No.	Type/ Grade	UNS No.	Class/ Condition/ Temper	Size, mm	P-No. (5)
184	18Cr–10Ni–Cb	Forgings & fittings	A182	F347H	S34709	. . .	. . .	8
185	18Cr–10Ni–Cb	Forgings & fittings	A182	F348H	S34809	. . .	. . .	8
186	16Cr–12Ni–2Mo	Forgings & fittings	A182	F316	S31600	. . .	. . .	8
187	16Cr–12Ni–2Mo	Forgings & fittings	A403	WP316	S31600	. . .	. . .	8
188	18Cr–13Ni–3Mo	Forgings & fittings	A403	WP317	S31700	. . .	. . .	8
189	18Cr–8Ni	Forgings & fittings	A182	F304	S30400	. . .	. . .	8
190	18Cr–8Ni	Forgings & fittings	A403	WP304	S30400	. . .	. . .	8
191	18Cr–8Ni	Forgings & fittings	A403	WP304H	S30409	. . .	. . .	8
192	18Cr–8Ni	Forgings & fittings	A182	F304H	S30409	. . .	. . .	8
193	44Fe–25Ni–21Cr–Mo	Forgings	A182	F904L	N08904	. . .	. . .	45
194	13Cr	Forgings & fittings	A182	F6a	S41000	1	. . .	6
195	13Cr	Forgings & fittings	A182	F6a	S41000	2	. . .	6
196	46Fe–24Ni–21Cr–6Mo–Cu–N	Forgings	A182	F62	N08367	. . .	. . .	45
197	46Fe–24Ni–21Cr–6Mo–Cu–N	Fittings	A403	WP6XN	N08367	. . .	. . .	45
198	46Fe–24Ni–21Cr–6Mo–Cu–N	Fittings	A403	CR6XN	N08367	. . .	. . .	45
199	25Cr–8Ni–3Mo–W–Cu–N	Forgings & fittings	A182	. . .	S32760	. . .	. . .	10H
200	25Cr–8Ni–3Mo–W–Cu–N	Forgings & fittings	A815	. . .	S32760	. . .	. . .	10H
201	13Cr	Forgings & fittings	A182	F6a	S41000	3	. . .	6
202	13Cr–½Mo	Forgings & fittings	A182	F6b	S41026	. . .	. . .	6
203	25Cr–7Ni–4Mo–N	Forgings & fittings	A182	F53	S32750	. . .	. . .	10H
204	25Cr–7Ni–4Mo–N	Forgings & fittings	A815	WPS32750	S32750	. . .	. . .	10H
205	25Cr–7Ni–4Mo–N	Forgings & fittings	A815	CRS32750	S32750	. . .	. . .	10H
206	13Cr	Forgings & fittings	A182	F6a	S41000	4	. . .	6
207	18Cr–8Ni	Bar	A479	304	S30400	. . .	. . .	8
208	18Cr–8Ni	Bar	A479	304H	S30409	. . .	. . .	8
209	18Cr–8Ni	Bar	A479	304L	S30403	. . .	. . .	8
210	16Cr–12Ni–2Mo	Bar	A479	316	S31600	. . .	. . .	8
211	16Cr–12Ni–2Mo	Bar	A479	316H	S31609	. . .	. . .	8
212	16Cr–12Ni–2Mo	Bar	A479	316L	S31603	. . .	. . .	8

Copyright © 2015 by the American Society of Mechanical Engineers.
No reproduction may be made of this material without written consent of ASME.

Table A-1M Basic Allowable Stresses in Tension for Metals (Metric) (Cont'd) (14)

Numbers in Parentheses Refer to Notes for Appendix A Tables; Specifications Are ASTM Unless Otherwise Indicated

Line No.	Notes	Min. Temp., °C (6)	Min. Tensile Strength, MPa	Min. Yield Strength, MPa	Max. Use Temp., °C	Basic Allowable Stress, *S*, MPa, at Metal Temperature, °C [Notes (1), (3), and (4b)] Min. Temp. to 40	65	100	125	150	175	200
184	(2)(9)(21)	−200	517	207	816	138	138	138	138	138	138	138
185	(2)(9)(21)	−200	517	207	816	138	138	138	138	138	138	138
186	(2)(9)(21)(26)(28)	−200	517	207	816	138	138	138	138	138	138	134
187	(2)(26)(28)(32)(37)	−255	517	207	816	138	138	138	138	138	138	134
188	(2)(26)(28)(32)	−200	517	207	816	138	138	138	138	138	138	134
189	(2)(9)(21)(26)(28)	−255	517	207	816	138	138	138	138	138	134	129
190	(2)(26)(28)(32)(37)	−255	517	207	816	138	138	138	138	138	134	129
191	(2)(26)(32)(37)	−200	517	207	816	138	138	138	138	138	134	129
192	(2)(9)(21)(26)	−200	517	207	816	138	138	138	138	138	134	129
193	(26)	−200	490	220	260	143	143	143	143	141	135	130
194	(2)(35)	−30	483	276	538	*161*	*161*	*161*	*160*	*158*	*156*	*155*
195	(2)(35)	−30	586	379	649	*195*	*195*	*195*	*194*	*191*	*190*	*188*
196	(26)	−200	655	310	427	207	207	207	207	206	202	198
197	(26)	−200	655	310	427	207	207	207	207	206	202	198
198	(26)	−200	655	310	427	207	207	207	207	206	202	198
199	(2)(25)	−50	752	552	316	*251*	*251*	*249*	*244*	*239*	*237*	*235*
200	(2)(25)	−50	752	552	316	*251*	*251*	*249*	*244*	*239*	*237*	*235*
201	(2)(35)	−30	758	586	40	253	...	...	...	...	...	...
202	(2)(35)	...	760–930	620	40	253	...	...	...	...	...	...
203	(25)	−50	800	550	316	*267*	*265*	*264*	*257*	*251*	*247*	*243*
204	(25)	−50	800	550	316	*267*	*265*	*264*	*257*	*251*	*247*	*243*
205	(25)	−50	800	550	316	*267*	*265*	*264*	*257*	*251*	*247*	*243*
206	(2)(35)	−30	896	758	40	299	...	...	...	...	...	...
207	(26)(28)(31)	−255	517	207	816	138	138	138	138	138	134	129
208	(26)(31)	−200	517	207	816	138	138	138	138	138	134	129
209	(31)	−255	483	172	816	115	115	115	115	115	114	110
210	(26)(28)(31)	−200	517	207	816	138	138	138	138	138	138	134
211	(26)(31)	−200	517	207	816	138	138	138	138	138	138	134
212	(31)	−255	483	172	816	115	115	115	115	115	113	109

Copyright © 2015 by the American Society of Mechanical Engineers.
No reproduction may be made of this material without written consent of ASME.

(14)

Table A-1M Basic Allowable Stresses in Tension for Metals (Metric) (Cont'd)

Numbers in Parentheses Refer to Notes for Appendix A Tables; Specifications Are ASTM Unless Otherwise Indicated

	Basic Allowable Stress, *S*, MPa, at Metal Temperature, °C [Notes (1), (3), and (4b)]												
Line No.	225	250	275	300	325	350	375	400	425	450	475	500	525
184	138	138	*137*	135	132	130	129	127	126	126	125	125	125
185	138	138	*137*	135	132	130	129	127	126	126	125	125	125
186	129	125	122	119	116	114	112	111	110	109	108	107	106
187	129	125	122	119	116	114	112	111	110	109	108	107	106
188	129	125	122	119	116	114	112	111	110	109	108	107	106
189	125	122	119	116	113	111	109	107	105	103	101	99.1	97.3
190	125	122	119	116	113	111	109	107	105	103	101	99.1	97.3
191	125	122	119	116	113	111	109	107	105	103	101	99.1	97.3
192	125	122	119	116	113	111	109	107	105	103	101	99.1	97.3
193	125	120	116	...	...	...	...	...	...	...	...	...	...
194	*154*	*153*	*152*	*150*	*148*	*145*	*142*	*137*	*133*	**125**	**92.5**	**68.4**	**51.1**
195	*187*	*186*	*184*	*182*	*180*	*176*	*172*	*167*	*161*	**125**	**92.5**	**68.4**	**51.1**
196	195	192	188	184	179	176	173	170	167	166	...	...	...
197	195	192	188	184	179	176	173	170	167	166	...	...	...
198	195	192	188	184	179	176	173	170	167	166	...	...	...
199	*234*	*234*	*234*	*234*	*234*	...	...	...	...	...	...	...	...
200	*234*	*234*	*234*	*234*	*234*	...	...	...	...	...	...	...	...
201	...	...	...	...	...	...	...	...	...	...	...	...	...
202	...	...	...	...	...	...	...	...	...	...	...	...	...
203	*241*	*238*	*237*	*237*	*236*	...	...	...	...	...	...	...	...
204	*241*	*238*	*237*	*237*	*236*	...	...	...	...	...	...	...	...
205	*241*	*238*	*237*	*237*	*236*	...	...	...	...	...	...	...	...
206	...	...	...	...	...	...	...	...	...	...	...	...	...
207	125	122	119	116	113	111	109	107	105	103	101	99.1	97.3
208	125	122	119	116	113	111	109	107	105	103	101	99.1	97.3
209	106	103	99.9	97.7	95.7	94.1	92.6	91.3	90.0	88.7	87.3	85.6	83.7
210	129	125	122	119	116	114	112	111	110	109	108	107	106
211	129	125	122	119	116	114	112	111	110	109	108	107	106
212	106	103	100	98.1	96.1	94.3	92.6	90.9	89.3	87.6	85.9	84.2	82.5

Copyright © 2015 by the American Society of Mechanical Engineers.
No reproduction may be made of this material without written consent of ASME.

Table A-1M Basic Allowable Stresses in Tension for Metals (Metric) (Cont'd) (14)

Numbers in Parentheses Refer to Notes for Appendix A Tables; Specifications Are ASTM Unless Otherwise Indicated

	Basic Allowable Stress, S, MPa, at Metal Temperature, °C [Notes (1), (3), and (4b)]											
Line No.	550	575	600	625	650	675	700	725	750	775	800	825
184	125	112	90.6	69.6	53.8	41.4	31.8	24.0	18.8	14.6	10.9	8.96
185	125	112	90.6	69.6	53.8	41.4	31.8	24.0	18.8	14.6	10.9	8.96
186	105	97.8	80.8	65.0	50.4	38.6	29.6	23.0	17.4	13.3	10.4	8.96
187	105	97.8	80.8	65.0	50.4	38.6	29.6	23.0	17.4	13.3	10.4	8.96
188	105	97.8	80.8	65.0	50.4	38.6	29.6	23.0	17.4	13.3	10.4	8.96
189	95.5	78.9	63.8	51.6	41.6	32.9	26.5	21.3	17.2	14.1	11.2	9.65
190	95.5	78.9	63.8	51.6	41.6	32.9	26.5	21.3	17.2	14.1	11.2	9.65
191	95.5	78.9	63.8	51.6	41.6	32.9	26.5	21.3	17.2	14.1	11.2	9.65
192	95.5	78.9	63.8	51.6	41.6	32.9	26.5	21.3	17.2	14.1	11.2	9.65
193	...	...	...	...	...	...	...	...	...	...	...	...
194	44.1	...	...	...	...	...	...	...	...	...	...	...
195	37.4	26.3	17.8	11.4	6.89	...	...	...	...	...	...	...
196	...	...	...	...	...	...	...	...	...	...	...	...
197	...	...	...	...	...	...	...	...	...	...	...	...
198	...	...	...	...	...	...	...	...	...	...	...	...
199	...	...	...	...	...	...	...	...	...	...	...	...
200	...	...	...	...	...	...	...	...	...	...	...	...
201	...	...	...	...	...	...	...	...	...	...	...	...
202	...	...	...	...	...	...	...	...	...	...	...	...
203	...	...	...	...	...	...	...	...	...	...	...	...
204	...	...	...	...	...	...	...	...	...	...	...	...
205	...	...	...	...	...	...	...	...	...	...	...	...
206	...	...	...	...	...	...	...	...	...	...	...	...
207	95.5	78.9	63.8	51.6	41.6	32.9	26.5	21.3	17.2	14.1	11.2	9.65
208	95.5	78.9	63.8	51.6	41.6	32.9	26.5	21.3	17.2	14.1	11.2	9.65
209	81.4	40.4	33.2	26.7	21.9	18.2	15.0	12.4	8.87	7.20	6.58	6.21
210	105	97.8	80.8	65.0	50.4	38.6	29.6	23.0	17.4	13.3	10.4	8.96
211	105	97.8	80.8	65.0	50.4	38.6	29.6	23.0	17.4	13.3	10.4	8.96
212	80.8	73.0	67.9	58.0	43.6	33.0	25.3	18.8	14.0	10.4	7.99	6.89

Copyright © 2015 by the American Society of Mechanical Engineers.
No reproduction may be made of this material without written consent of ASME.

(14)

Table A-1M Basic Allowable Stresses in Tension for Metals (Metric) (Cont'd)

Numbers in Parentheses Refer to Notes for Appendix A Tables; Specifications Are ASTM Unless Otherwise Indicated

Line No.	Nominal Composition	Product Form	Spec. No.	Type/ Grade	UNS No.	Class/ Condition/ Temper	Size, mm	P-No. (5)
213	18Cr–10Ni–Ti	Bar	A479	321	S32100	...	...	8
214	18Cr–10Ni–Ti	Bar	A479	321	S32100	...	...	8
215	18Cr–10Ni–Ti	Bar	A479	321H	S32109	...	...	8
216	18Cr–10Ni–Cb	Bar	A479	347	S34700	...	...	8
217	18Cr–10Ni–Cb	Bar	A479	347	S34700	...	...	8
218	18Cr–10Ni–Cb	Bar	A479	347H	S34709	...	...	8
219	44Fe–25Ni–21Cr–Mo	Bar	A479	904L	N08904	...	...	45
220	46Fe–24Ni–21Cr–6Mo–Cu–N	Bar	A479	...	N08367	...	...	45
221	22Cr–13Ni–5Mn	Bar	A479	XM-19	S20910	...	...	8
222	25Cr–7Ni–4Mo–N	Bar	A479	...	S32750	...	≤ 50	10H
223	28Ni–20Cr–2Mo–3Cb	Castings	A351	CN7M	J95150	...	...	45
224	35Ni–15Cr–Mo	Castings	A351	HT30	N08603	...	...	45
225	25Cr–13Ni	Castings	A351	CH8	J93400	...	...	8
226	25Cr–20Ni	Castings	A351	CK20	J94202	...	...	8
227	15Cr–15Ni–2Mo–Cb	Castings	A351	CF10MC	...	...	...	8
228	18Cr–8Ni	Castings	A351	CF3	J92500	...	...	8
229	17Cr–10Ni–2Mo	Castings	A351	CF3M	J92800	...	...	8
230	18Cr–8Ni	Castings	A351	CF8	J92600	...	...	8
231	25Cr–13Ni	Castings	A351	CH10	J93401	...	...	8
232	25Cr–13Ni	Castings	A351	CH20	J93402	...	...	8
233	20Cr–10Ni–Cb	Castings	A351	CF8C	J92710	...	...	8
234	18Cr–10Ni–2Mo	Castings	A351	CF8M	J92900	...	...	8
235	25Cr–20Ni	Castings	A351	HK40	J94204	...	...	8
236	25Cr–20Ni	Castings	A351	HK30	J94203	...	...	8
237	18Cr–8Ni	Castings	A351	CF3A	J92500	...	...	8
238	18Cr–8Ni	Castings	A351	CF8A	J92600	...	...	8
239	25Cr–10Ni–N	Castings	A351	CE20N	J92802	...	...	8
240	12Cr	Castings	A217	CA15	J91150	...	...	6
241	24Cr–10Ni–Mo–N	Castings	A351	CE8MN	...	...	...	10H
242	25Cr–8Ni–3Mo–W–Cu–N	Castings	A351	CD3MWCuN	...	...	...	10H
243	13Cr–4Ni	Castings	A487	CA6NM	J91540	...	...	6

Copyright © 2015 by the American Society of Mechanical Engineers.
No reproduction may be made of this material without written consent of ASME.

Table A-1M Basic Allowable Stresses in Tension for Metals (Metric) (Cont'd) (14)

Numbers in Parentheses Refer to Notes for Appendix A Tables; Specifications Are ASTM Unless Otherwise Indicated

Line No.	Notes	Min. Temp., °C (6)	Min. Tensile Strength, MPa	Min. Yield Strength, MPa	Max. Use Temp., °C	Basic Allowable Stress, *S*, MPa, at Metal Temperature, °C [Notes (1), (3), and (4b)] Min. Temp. to 40	65	100	125	150	175	200
213	. . .	−200	517	207	816	138	138	138	138	138	138	138
214	(28)(30)	−200	517	207	816	138	138	138	138	138	138	138
215	. . .	−200	517	207	816	138	138	138	138	138	138	138
216	. . .	−255	517	207	816	138	138	138	138	138	138	138
217	(28)(30)	−255	517	207	816	138	138	138	138	138	138	138
218	. . .	−200	517	207	816	138	138	138	138	138	138	138
219	(26)	−200	490	220	260	143	143	143	143	141	135	130
220	(26)	−200	655	310	427	207	207	207	207	206	202	198
221	. . .	−30	690	380	649	230	*230*	*227*	*221*	*217*	*213*	*210*
222	(25)	−50	800	550	316	*267*	*265*	*264*	*257*	*251*	*247*	*243*
223	(2)(9)(30)	−200	427	172	40	115	. . .	. . .	. . .	. . .	. . .	. . .
224	(2)(36)(39)	−200	448	193	40	129	. . .	. . .	. . .	. . .	. . .	. . .
225	(2)(9)(31)	−200	448	193	816	129	129	129	129	*127*	*125*	*124*
226	(2)(9)(27)(31)(35)(39)	−200	448	193	816	129	129	129	129	*127*	*125*	*124*
227	(2)(30)	−200	483	207	40	138	. . .	. . .	. . .	. . .	. . .	. . .
228	(2)(9)	−255	483	207	427	138	138	138	138	138	134	129
229	(2)(9)	−255	483	207	454	138	138	138	138	138	138	133
230	(2)(9)(26)(27)(31)	−255	483	207	816	138	138	138	138	138	134	129
231	(2)(27)(31)(35)	−200	483	207	816	138	138	138	138	138	138	138
232	(2)(9)(27)(31)(35)(39)	−200	483	207	816	138	138	138	138	138	138	138
233	(2)(9)(27)(30)	−200	483	207	800	138	138	138	138	138	138	138
234	(2)(9)(26)(27)(30)	−255	483	207	816	138	138	138	138	138	134	129
235	(2)(35)(36)(39)	−200	427	241	40	142	. . .	. . .	. . .	. . .	. . .	. . .
236	(2)(35)(39)	−200	448	241	40	149	. . .	. . .	. . .	. . .	. . .	. . .
237	(2)(9)(56)	−255	531	241	371	161	161	161	*160*	*156*	*153*	151
238	(2)(9)(26)(56)	−255	531	241	371	161	161	161	*160*	*156*	*153*	151
239	(2)(35)(39)	−200	552	276	482	184	184	184	184	184	184	184
240	(2)(35)	−30	621	448	649	*207*	*207*	*207*	*205*	*203*	*201*	*199*
241	(2)(9)	−50	655	448	316	*218*	*218*	*216*	*208*	*201*	*197*	*195*
242	(2)(9)(25)	−50	689	448	316	*230*	*230*	*227*	*221*	*216*	*212*	*209*
243	(2)(9)(35)	−30	758	552	371	*253*	*253*	*253*	*251*	*248*	*245*	*244*

Copyright © 2015 by the American Society of Mechanical Engineers.
No reproduction may be made of this material without written consent of ASME.

(14)

Table A-1M Basic Allowable Stresses in Tension for Metals (Metric) (Cont'd)

Numbers in Parentheses Refer to Notes for Appendix A Tables; Specifications Are ASTM Unless Otherwise Indicated

	Basic Allowable Stress, *S*, MPa, at Metal Temperature, °C [Notes (1), (3), and (4b)]												
Line No.	225	250	275	300	325	350	375	400	425	450	475	500	525
213	138	135	131	128	125	123	120	119	117	116	114	113	112
214	138	135	131	128	125	123	120	119	117	116	114	113	112
215	138	135	131	128	125	123	120	119	117	116	114	113	112
216	138	138	*137*	135	132	130	128	127	126	126	125	125	125
217	138	138	*137*	135	132	130	128	127	126	126	125	125	125
218	138	138	*137*	135	132	130	128	127	126	126	125	125	125
219	125	120	116	...	...	...	...	...	...	...	...	...	...
220	195	192	188	184	179	176	173	170	167	166	...	...	...
221	*207*	*205*	*204*	*202*	*201*	*200*	*199*	*197*	*195*	*193*	*191*	*188*	*183*
222	*241*	*238*	*237*	*237*	*236*	...	...	...	...	...	...	...	...
223	...	...	...	...	...	...	...	...	...	...	...	...	...
224	...	...	...	...	...	...	...	...	...	...	...	...	...
225	*124*	123	121	119	117	115	112	109	106	103	100	96.9	93.7
226	*124*	123	121	119	117	115	112	109	106	103	100	96.9	93.7
227	...	...	...	...	...	...	...	...	...	...	...	...	...
228	125	122	119	116	113	111	109	107	105	103	...	...	...
229	129	125	122	119	116	114	112	111	109	108	107	...	...
230	125	122	119	116	113	111	109	107	105	103	101	99.1	**94.4**
231	138	138	138	138	138	138	138	138	138	138	138	138	138
232	138	138	138	138	138	138	138	138	138	138	138	138	138
233	138	138	138	138	138	**97.0**	**84.3**	**73.3**	**64.0**	**55.8**	**43.9**	**31.7**	**21.4**
234	125	122	119	116	113	111	109	107	105	103	101	99.1	97.3
235	...	...	...	...	...	...	...	...	...	...	...	...	...
236	...	...	...	...	...	...	...	...	...	...	...	...	...
237	146	142	138	135	132	130	127	...	...	...	...	...	...
238	146	142	138	135	132	130	127	...	...	...	...	...	...
239	184	184	184	184	184	184	184	184	184	184	184	184	...
240	*198*	*197*	*195*	*193*	*190*	*187*	*182*	**120**	**116**	**105**	**82.1**	**59.9**	**41.8**
241	*194*	*194*	*194*	*194*	*194*	...	...	...	...	...	...	...	...
242	*207*	*206*	*205*	*204*	*204*	...	...	...	...	...	...	...	...
243	*242*	*240*	*238*	*236*	*232*	*228*	*224*	...	...	...	...	...	...

Copyright © 2015 by the American Society of Mechanical Engineers.
No reproduction may be made of this material without written consent of ASME.

Table A-1M Basic Allowable Stresses in Tension for Metals (Metric) (Cont'd) (14)

Numbers in Parentheses Refer to Notes for Appendix A Tables; Specifications Are ASTM Unless Otherwise Indicated

	Basic Allowable Stress, *S*, MPa, at Metal Temperature, °C [Notes (1), (3), and (4b)]											
Line No.	550	575	600	625	650	675	700	725	750	775	800	825
213	**88.7**	**59.2**	**44.0**	**32.9**	**24.5**	**18.3**	**12.5**	**8.49**	**6.19**	**4.28**	**2.78**	**2.07**
214	**100**	**76.5**	**58.7**	**46.0**	**36.8**	**28.7**	**23.0**	**18.4**	**14.5**	**11.5**	**9.02**	**7.58**
215	**100**	**76.5**	**58.7**	**46.0**	**36.8**	**28.7**	**23.0**	**18.4**	**14.5**	**11.5**	**9.02**	**7.58**
216	**97.6**	**75.9**	**57.2**	**40.2**	**30.3**	**23.2**	**16.2**	**11.4**	**8.97**	**7.08**	**5.89**	**5.52**
217	125	**112**	**90.6**	**69.6**	**53.8**	**41.4**	**31.8**	**24.0**	**18.8**	**14.6**	**10.9**	**8.96**
218	125	**112**	**90.6**	**69.6**	**53.8**	**41.4**	**31.8**	**24.0**	**18.8**	**14.6**	**10.9**	**8.96**
219	...	...	...	...	...	...	...	...	...	...	...	...
220	...	...	...	...	...	...	...	...	...	...	...	...
221	*179*	*174*	132	83.6	56.1	...	...	...	...	...	...	...
222	...	...	...	...	...	...	...	...	...	...	...	...
223	...	...	...	...	...	...	...	...	...	...	...	...
224	...	...	...	...	...	...	...	...	...	...	...	...
225	**68.1**	**53.5**	**42.1**	**33.2**	**25.9**	**20.3**	**16.5**	**13.2**	**10.1**	**7.35**	**5.89**	**5.52**
226	**73.2**	**64.4**	**56.5**	**49.0**	**41.0**	**33.5**	**25.4**	**18.3**	**12.8**	**9.01**	**6.59**	**5.52**
227	...	...	...	...	...	...	...	...	...	...	...	...
228	...	...	...	...	...	...	...	...	...	...	...	...
229	...	...	...	...	...	...	...	...	...	...	...	...
230	**75.3**	**60.4**	**49.0**	**40.1**	**32.8**	**27.2**	**23.4**	**19.6**	**16.8**	**14.7**	**12.8**	**11.7**
231	**68.1**	**53.5**	**42.1**	**33.2**	**25.9**	**20.3**	**16.5**	**13.2**	**10.1**	**7.35**	**5.89**	**5.52**
232	**68.1**	**53.5**	**42.1**	**33.2**	**25.9**	**20.3**	**16.5**	**13.2**	**10.1**	**7.35**	**5.89**	**5.52**
233	**14.2**	**9.40**	**6.16**	**4.03**	**2.64**	**1.73**	**1.13**	**0.74**	**0.49**	**0.32**	**0.21**	...
234	95.5	**75.9**	**57.2**	**40.2**	**30.3**	**23.2**	**16.2**	**11.4**	**8.97**	**7.08**	**5.89**	**5.52**
235	...	...	...	...	...	...	...	...	...	...	...	...
236	...	...	...	...	...	...	...	...	...	...	...	...
237	...	...	...	...	...	...	...	...	...	...	...	...
238	...	...	...	...	...	...	...	...	...	...	...	...
239	...	...	...	...	...	...	...	...	...	...	...	...
240	**28.7**	**20.1**	**14.3**	**9.77**	**6.89**	...	...	...	...	...	...	...
241	...	...	...	...	...	...	...	...	...	...	...	...
242	...	...	...	...	...	...	...	...	...	...	...	...
243	...	...	...	...	...	...	...	...	...	...	...	...

Copyright © 2015 by the American Society of Mechanical Engineers.
No reproduction may be made of this material without written consent of ASME.

(14)

Table A-1M Basic Allowable Stresses in Tension for Metals (Metric) (Cont'd)

Numbers in Parentheses Refer to Notes for Appendix A Tables; Specifications Are ASTM Unless Otherwise Indicated

Line No.	Nominal Composition	Product Form	Spec. No.	UNS No.	Class/ Condition/ Temper	Size, mm	P-No. (5)(7)	Notes	Min. Temp., °C (6)	Min. Tensile Str., MPa	Min. Yield Str., MPa
1	Cu	Pipe	B42	C10200	O61	. . .	31	(2)	−270	207	62
2	Cu	Pipe	B42	C12000	O61	. . .	31	(2)	−270	207	62
3	Cu	Pipe	B42	C12200	O61	. . .	31	(2)	−270	207	62
4	Cu	Tube	B75	C10200	O50	. . .	31	(2)	−270	207	62
5	Cu	Tube	B75	C10200	O60	. . .	31	(2)	−270	207	62
6	Cu	Tube	B75	C12000	O50	. . .	31	(2)	−270	207	62
7	Cu	Tube	B75	C12000	O60	. . .	31	(2)	−270	207	62
8	Cu	Tube	B75	C12200	O50	. . .	31	(2)	−270	207	62
9	Cu	Tube	B75	C12200	O60	. . .	31	(2)	−270	207	62
10	Cu	Tube	B68	C12200	O50	. . .	31	(2)(24)	−270	207	62
11	Cu	Tube	B68	C12200	O60	. . .	31	(2)(24)	−270	207	62
12	Cu	Tube	B88	C12200	O50	. . .	31	(2)(24)	−270	207	62
13	Cu	Tube	B88	C12200	O60	. . .	31	(2)(24)	−270	207	62
14	Cu	Tube	B280	C12200	O60	. . .	31	(2)(24)	−270	207	62
15	Red brass	Pipe	B43	C23000	O61	. . .	32	(2)	−270	276	83
16	90Cu–10Ni	Pipe & tube	B467	C70600	WO50	> 114 O.D.	34	(2)(14)	−270	262	90
17	90Cu–10Ni	Pipe & tube	B467	C70600	WO61	> 114 O.D.	34	(2)(14)	−270	262	90
18	90Cu–10Ni	Pipe & tube	B466	C70600	Annealed	. . .	34	(2)(14)	−270	262	90
19	90Cu–10Ni	Pipe & tube	B467	C70600	WO50	≤ 114 O.D.	34	(2)(14)	−270	276	103
20	90Cu–10Ni	Pipe & tube	B467	C70600	WO61	≤ 114 O.D.	34	(2)(14)	−270	276	103
21	70Cu–30Ni	Pipe & tube	B467	C71500	WO50	> 114 O.D.	34	(2)(14)	−270	310	103
22	70Cu–30Ni	Pipe & tube	B467	C71500	WO61	> 114 O.D.	34	(2)(14)	−270	310	103
23	80Cu–20Ni	Pipe & tube	B466	C71000	Annealed	≤ 114 O.D.	34	(2)(14)	−270	310	110
24	Cu	Pipe	B42	C10200	H55	DN 64 thru 300	31	(2)(14)(34)	−270	248	207
25	Cu	Pipe	B42	C12000	H55	DN 64 thru 300	31	(2)(14)(34)	−270	248	207
26	Cu	Pipe	B42	C12200	H55	DN 64 thru 300	31	(2)(14)(34)	−270	248	207
27	Cu	Tube	B75	C10200	H58	. . .	31	(2)(14)(34)	−270	248	207
28	Cu	Tube	B75	C12000	H58	. . .	31	(2)(14)(34)	−270	248	207
29	Cu	Tube	B75	C12200	H58	. . .	31	(2)(14)(34)	−270	248	207
30	Cu	Tube	B88	C12200	H58	. . .	31	(2)(14)(24)(34)	−270	248	207
31	70Cu–30Ni	Pipe & tube	B466	C71500	O60	. . .	34	(2)(14)	−270	359	124
32	70Cu–30Ni	Pipe & tube	B467	C71500	WO50	≤ 114 O.D.	34	(2)(14)	−270	345	138
33	70Cu–30Ni	Pipe & tube	B467	C71500	WO61	≤ 114 O.D.	34	(2)(14)	−270	345	138

Copyright © 2015 by the American Society of Mechanical Engineers.
No reproduction may be made of this material without written consent of ASME.

Table A-1M Basic Allowable Stresses in Tension for Metals (Metric) (Cont'd) (14)

Numbers in Parentheses Refer to Notes for Appendix A Tables; Specifications Are ASTM Unless Otherwise Indicated

Line No.	Max. Use Temp., °C	Basic Allowable Stress, *S*, MPa, at Metal Temperature, °C [Notes (1) and (4b)]													
		Min. Temp. to 40	65	100	125	150	175	200	225	250	275	300	325	350	375
1	260	41.4	34.9	33.5	32.9	32.2	**28.0**	**21.7**	**16.7**	**12.9**	**11.6**	...	...	...	...
2	260	41.4	34.9	33.5	32.9	32.2	**28.0**	**21.7**	**16.7**	**12.9**	**11.6**	...	...	...	...
3	260	41.4	34.9	33.5	32.9	32.2	**28.0**	**21.7**	**16.7**	**12.9**	**11.6**	...	...	...	...
4	260	41.4	34.9	33.5	32.9	32.2	**28.0**	**21.7**	**16.7**	**12.9**	**11.6**	...	...	...	...
5	260	41.4	34.9	33.5	32.9	32.2	**28.0**	**21.7**	**16.7**	**12.9**	**11.6**	...	...	...	...
6	260	41.4	34.9	33.5	32.9	32.2	**28.0**	**21.7**	**16.7**	**12.9**	**11.6**	...	...	...	...
7	260	41.4	34.9	33.5	32.9	32.2	**28.0**	**21.7**	**16.7**	**12.9**	**11.6**	...	...	...	...
8	260	41.4	34.9	33.5	32.9	32.2	**28.0**	**21.7**	**16.7**	**12.9**	**11.6**	...	...	...	...
9	260	41.4	34.9	33.5	32.9	32.2	**28.0**	**21.7**	**16.7**	**12.9**	**11.6**	...	...	...	...
10	260	41.4	34.9	33.5	32.9	32.2	**28.0**	**21.7**	**16.7**	**12.9**	**11.6**	...	...	...	...
11	260	41.4	34.9	33.5	32.9	32.2	**28.0**	**21.7**	**16.7**	**12.9**	**11.6**	...	...	...	...
12	260	41.4	34.9	33.5	32.9	32.2	**28.0**	**21.7**	**16.7**	**12.9**	**11.6**	...	...	...	...
13	260	41.4	34.9	33.5	32.9	32.2	**28.0**	**21.7**	**16.7**	**12.9**	**11.6**	...	...	...	...
14	260	41.4	34.9	33.5	32.9	32.2	**28.0**	**21.7**	**16.7**	**12.9**	**11.6**	...	...	...	...
15	232	55.2	54.7	54.7	54.7	54.7	54.7	**36.4**	**17.5**	**13.8**	...	...	...	...	...
16	316	59.8	58.0	56.1	54.9	53.8	52.9	52.0	51.2	50.4	49.7	**45.1**	**39.3**	...	...
17	316	59.8	58.0	56.1	54.9	53.8	52.9	52.0	51.2	50.4	49.7	**45.1**	**39.3**	...	...
18	316	59.8	58.0	56.1	54.9	53.8	52.9	52.0	51.2	50.4	49.7	**45.1**	**39.3**	...	...
19	316	68.9	67.0	65.1	63.7	62.4	61.1	60.0	59.1	58.3	**51.3**	**45.1**	**39.3**	...	...
20	316	68.9	67.0	65.1	63.7	62.4	61.1	60.0	59.1	58.3	**51.3**	**45.1**	**39.3**	...	...
21	371	68.9	66.6	64.6	63.2	61.9	60.7	59.5	58.4	57.4	**56.2**	**55.5**	**54.9**	**54.3**	**53.8**
22	371	68.9	66.6	64.6	63.2	61.9	60.7	59.5	58.4	57.4	**56.2**	**55.5**	**54.9**	**54.3**	**53.8**
23	371	73.5	72.8	72.1	71.4	70.6	69.6	68.3	66.6	64.7	62.4	60.0	**56.2**	**51.9**	**48.3**
24	204	*82.7*	*80.0*	*74.1*	*71.3*	*69.2*	*67.4*	*65.7*	*65.3*	...	...	...	...	...	...
25	204	*82.7*	*80.0*	*74.1*	*71.3*	*69.2*	*67.4*	*65.7*	*65.3*	...	...	...	...	...	...
26	204	*82.7*	*80.0*	*74.1*	*71.3*	*69.2*	*67.4*	*65.7*	*65.3*	...	...	...	...	...	...
27	204	*82.7*	*80.0*	*74.1*	*71.3*	*69.2*	*67.4*	*65.7*	*65.3*	...	...	...	...	...	...
28	204	*82.7*	*80.0*	*74.1*	*71.3*	*69.2*	*67.4*	*65.7*	*65.3*	...	...	...	...	...	...
29	204	*82.7*	*80.0*	*74.1*	*71.3*	*69.2*	*67.4*	*65.7*	*65.3*	...	...	...	...	...	...
30	204	*82.7*	*80.0*	*74.1*	*71.3*	*69.2*	*67.4*	*65.7*	*65.3*	...	...	...	...	...	...
31	371	82.7	79.8	77.5	75.9	74.3	72.9	71.5	70.2	68.9	67.8	66.8	65.9	65.3	64.8
32	371	91.9	88.7	86.1	84.3	82.6	81.0	79.4	78.0	76.6	75.3	74.2	73.2	72.5	71.7
33	371	91.9	88.7	86.1	84.3	82.6	81.0	79.4	78.0	76.6	75.3	74.2	73.2	72.5	71.7

Copyright © 2015 by the American Society of Mechanical Engineers.
No reproduction may be made of this material without written consent of ASME.

(14)

Table A-1M Basic Allowable Stresses in Tension for Metals (Metric) (Cont'd)

Numbers in Parentheses Refer to Notes for Appendix A Tables; Specifications Are ASTM Unless Otherwise Indicated

Line No.	Nominal Composition	Product Form	Spec. No.	UNS No.	Class/ Condition/ Temper	Size, mm	P-No. (5)(7)	Notes	Min. Temp., °C (6)	Min. Tensile Str., MPa	Min. Yield Str., MPa
34	Cu	Pipe	B42	C10200	H80	DN 6 thru 50	31	(2)(14)(34)	−270	310	276
35	Cu	Pipe	B42	C12000	H80	DN 6 thru 50	31	(2)(14)(34)	−270	310	276
36	Cu	Pipe	B42	C12200	H80	DN 6 thru 50	31	(2)(14)(34)	−270	310	276
37	Cu	Tube	B75	C10200	H80	. . .	31	(2)(14)(34)	−270	310	276
38	Cu	Tube	B75	C12000	H80	. . .	31	(2)(14)(34)	−270	310	276
39	Cu	Tube	B75	C12200	H80	. . .	31	(2)(14)(34)	−270	310	276
40	Cu	Plate & sheet	B152	C10200	O25	. . .	31	(14)(24)	−270	207	69
41	Cu	Plate & sheet	B152	C10400	O25	. . .	31	(14)(24)	−270	207	69
42	Cu	Plate & sheet	B152	C10500	O25	. . .	31	(14)(24)	−270	207	69
43	Cu	Plate & sheet	B152	C10700	O25	. . .	31	(14)(24)	−270	207	69
44	Cu	Plate & sheet	B152	C12200	O25	. . .	31	(14)(24)	−270	207	69
45	Cu	Plate & sheet	B152	C12300	O25	. . .	31	(14)(24)	−270	207	69
46	90Cu–10Ni	Plate & sheet	B171	C70600	. . .	≤ 64 thk.	34	(14)	−270	276	103
47	Cu–Si	Plate & sheet	B96	C65500	O61	. . .	33	. . .	−270	359	124
48	70Cu–30Ni	Plate & sheet	B171	C71500	. . .	≤ 64 thk.	34	(14)	−270	345	138
49	Al–bronze	Plate & sheet	B169	C61400	O25	≤ 50 thk.	35	(13)	−270	483	207
50	Al–bronze	Plate & sheet	B169	C61400	O60	≤ 50 thk.	35	(13)	−270	483	207
51	Cu	Forgings	B283	C11000	. . .	. . .	31	(14)	−270	228	76
52	High Si–bronze (A)	Forgings	B283	C65500	. . .	. . .	33	(14)	−270	359	124
53	Forging brass	Forgings	B283	C37700	. . .	. . .	a	(14)	−200	400	159
54	Leaded naval brass	Forgings	B283	C48500	. . .	. . .	a	(14)	−200	427	165
55	Naval brass	Forgings	B283	C46400	. . .	. . .	32	(14)	−255	441	179
56	Mn–bronze (A)	Forgings	B283	C67500	. . .	. . .	32	(14)	−200	496	234
57	Composition bronze	Castings	B62	C83600	. . .	. . .	a	(2)(9)	−200	207	97
58	Leaded Ni–bronze	Castings	B584	C97300	. . .	. . .	a	(2)	−200	207	103
59	Leaded Ni–bronze	Castings	B584	C97600	. . .	. . .	a	(2)	−200	276	117
60	Leaded Sn–bronze	Castings	B584	C92300	. . .	. . .	a	(2)	−200	248	110
61	Leaded Sn–bronze	Castings	B584	C92200	. . .	. . .	a	(2)	−200	234	110
62	Steam bronze	Castings	B61	C92200	. . .	. . .	a	(2)(9)	−200	234	110
63	Sn–bronze	Castings	B584	C90300	. . .	. . .	b	(2)	−200	276	124
64	Sn–bronze	Castings	B584	C90500	. . .	. . .	b	(2)	−200	276	124

Copyright © 2015 by the American Society of Mechanical Engineers.
No reproduction may be made of this material without written consent of ASME.

Table A-1M Basic Allowable Stresses in Tension for Metals (Metric) (Cont'd) (14)

Numbers in Parentheses Refer to Notes for Appendix A Tables; Specifications Are ASTM Unless Otherwise Indicated

Line No.	Max. Use Temp., °C	Basic Allowable Stress, *S*, MPa, at Metal Temperature, °C [Notes (1) and (4b)]													
		Min. Temp. to 40	65	100	125	150	175	200	225	250	275	300	325	350	375
34	204	*103*	*100*	*92.6*	*89.1*	*86.5*	*84.3*	**35.8**	**29.6**	...	...	...	...	...	...
35	204	*103*	*100*	*92.6*	*89.1*	*86.5*	*84.3*	**35.8**	**29.6**	...	...	...	...	...	...
36	204	*103*	*100*	*92.6*	*89.1*	*86.5*	*84.3*	**35.8**	**29.6**	...	...	...	...	...	...
37	204	*103*	*100*	*92.6*	*89.1*	*86.5*	*84.3*	**35.8**	**29.6**	...	...	...	...	...	...
38	204	*103*	*100*	*92.6*	*89.1*	*86.5*	*84.3*	**35.8**	**29.6**	...	...	...	...	...	...
39	204	*103*	*100*	*92.6*	*89.1*	*86.5*	*84.3*	**35.8**	**29.6**	...	...	...	...	...	...
40	260	46.0	39.1	37.1	36.5	**34.2**	**28.0**	**21.7**	**16.7**	**12.9**	**11.6**	...	...	...	...
41	260	46.0	39.1	37.1	36.5	**34.2**	**28.0**	**21.7**	**16.7**	**12.9**	**11.6**	...	...	...	...
42	260	46.0	39.1	37.1	36.5	**34.2**	**28.0**	**21.7**	**16.7**	**12.9**	**11.6**	...	...	...	...
43	260	46.0	39.1	37.1	36.5	**34.2**	**28.0**	**21.7**	**16.7**	**12.9**	**11.6**	...	...	...	...
44	260	46.0	39.1	37.1	36.5	**34.2**	**28.0**	**21.7**	**16.7**	**12.9**	**11.6**	...	...	...	...
45	260	46.0	39.1	37.1	36.5	**34.2**	**28.0**	**21.7**	**16.7**	**12.9**	**11.6**	...	...	...	...
46	316	68.9	67.0	65.1	63.7	62.4	61.1	60.0	59.1	58.3	**51.3**	**45.1**	**39.3**	...	...
47	177	82.7	82.3	81.5	80.8	80.0	**70.6**	**68.9**	...	...	...	...	...	...	...
48	371	91.9	88.7	86.1	84.3	82.6	81.0	79.4	78.0	76.6	75.3	74.2	73.2	72.5	71.7
49	260	138	137	136	135	135	134	133	131	130	130	...	...	...	...
50	260	138	137	136	135	135	134	133	131	130	130	...	...	...	...
51	260	50.6	42.8	40.8	40.2	**34.2**	**28.0**	**21.7**	**16.7**	**12.9**	**11.6**	...	...	...	...
52	204	82.7	82.3	81.5	80.8	80.0	**70.6**	**49.3**	**46.2**	...	...	...	...	...	...
53	204	106	99.8	94.5	91.1	**71.4**	**52.8**	**17.0**	**13.8**	...	...	...	...	...	...
54	204	110	110	110	110	110	110	110	110	...	...	...	...	...	...
55	204	120	120	120	120	*118*	*118*	**20.0**	**17.2**	...	...	...	...	...	...
56	204	156	156	156	156	156	156	156	156	...	...	...	...	...	...
57	232	64.4	64.4	62.6	59.1	55.7	53.0	51.2	50.3	50.1	...	...	...	...	...
58	40	68.9	...	...	...	...	...	...	...	...	...	...	...	...	...
59	149	78.1	69.6	64.9	62.5	60.3	...	...	...	...	...	...	...	...	...
60	204	73.5	73.5	73.5	73.5	73.5	73.5	73.5	73.5	...	...	...	...	...	...
61	204	73.5	66.4	65.3	64.6	63.3	61.5	59.6	58.1	...	...	...	...	...	...
62	288	73.5	66.4	65.3	64.6	63.3	61.5	59.6	58.1	57.5	57.5	57.3	...	...	...
63	204	82.7	82.7	82.7	82.7	82.7	82.7	82.7	82.7	...	...	...	...	...	...
64	204	82.7	82.7	82.7	82.7	82.7	82.7	82.7	82.7	...	...	...	...	...	...

Copyright © 2015 by the American Society of Mechanical Engineers.
No reproduction may be made of this material without written consent of ASME.

(14)

Table A-1M Basic Allowable Stresses in Tension for Metals (Metric) (Cont'd)

Numbers in Parentheses Refer to Notes for Appendix A Tables; Specifications Are ASTM Unless Otherwise Indicated

Line No.	Nominal Composition	Product Form	Spec. No.	UNS No.	Class/ Condition/ Temper	Size, mm	P-No. (5)(7)	Notes	Min. Temp., °C (6)	Min. Tensile Str., MPa	Min. Yield Str., MPa
65	Leaded Mn–bronze	Castings	B584	C86400	. . .	. . .	a	(2)(9)	−200	414	138
66	Leaded Ni–bronze	Castings	B584	C97800	. . .	. . .	a	(2)	−200	345	152
67	No. 1 Mn–bronze	Castings	B584	C86500	. . .	. . .	b	(2)	−200	448	172
68	Al–bronze	Castings	B148	C95200	. . .	. . .	35	(2)(9)	−255	448	172
69	Al–bronze	Castings	B148	C95300	. . .	. . .	35	(2)(9)	−255	448	172
70	Si–Al–bronze	Castings	B148	C95600	. . .	. . .	35	(2)	−200	414	193
71	Al–bronze	Castings	B148	C95400	. . .	. . .	35	(2)	−200	517	207
72	Mn–bronze	Castings	B584	C86700	. . .	. . .	a	(2)	−200	552	221
73	Al–bronze	Castings	B148	C95500	. . .	. . .	35	(2)	−270	621	276
74	High strength Mn–bronze	Castings	B584	C86200	. . .	. . .	b	(2)	−200	621	310
75	High strength Mn–bronze	Castings	B584	C86300	. . .	. . .	b	(2)	−200	758	414
76	Si–brass	Rod	B371	C69300	H02	≤ 12	a	. . .	−200	585	310
77	Si–brass	Rod	B371	C69300	H02	> 12, ≤ 25	a	. . .	−200	515	240
78	Si–brass	Rod	B371	C69300	H02	> 25, ≤ 50	a	. . .	−200	480	205

Copyright © 2015 by the American Society of Mechanical Engineers.
No reproduction may be made of this material without written consent of ASME.

Table A-1M Basic Allowable Stresses in Tension for Metals (Metric) (Cont'd) (14)

Numbers in Parentheses Refer to Notes for Appendix A Tables; Specifications Are ASTM Unless Otherwise Indicated

Line No.	Max. Use Temp., °C	Basic Allowable Stress, *S*, MPa, at Metal Temperature, °C [Notes (1) and (4b)]													
		Min. Temp. to 40	65	100	125	150	175	200	225	250	275	300	325	350	375
65	177	*91.9*	*91.9*	*91.9*	*91.9*	*91.9*	*91.9*	*91.9*	...	...	...	...	...	...	...
66	177	101	101	101	101	101	101	101	...	...	...	...	...	...	...
67	177	115	115	115	115	115	115	115	...	...	...	...	...	...	...
68	316	115	108	104	102	99.8	98.6	97.8	97.5	97.4	97.4	**65.9**	**43.7**	...	...
69	316	115	115	115	115	115	115	115	115	115	115	115	115	...	...
70	40	129	...	...	...	...	...	...	...	...	...	...	...	...	...
71	260	138	131	128	128	128	128	128	128	**101**	**95.8**	...	...	...	...
72	177	147	147	147	147	147	147	147	...	...	...	...	...	...	...
73	260	184	184	184	184	184	184	184	184	184	184	...	...	...	...
74	177	*207*	*207*	*207*	*207*	*207*	*207*	*207*	...	...	...	...	...	...	...
75	177	*253*	*253*	*253*	*253*	*253*	*253*	*253*	...	...	...	...	...	...	...
76	149	195	179	176	176	176	...	...	...	...	...	...	...	...	...
77	149	161	139	137	137	137	...	...	...	...	...	...	...	...	...
78	149	138	119	117	117	117	...	...	...	...	...	...	...	...	...

Copyright © 2015 by the American Society of Mechanical Engineers.
No reproduction may be made of this material without written consent of ASME.

(14)

Table A-1M Basic Allowable Stresses in Tension for Metals (Metric) (Cont'd)

Numbers in Parentheses Refer to Notes for Appendix A Tables; Specifications Are ASTM Unless Otherwise Indicated

Line No.	Nominal Composition	Product Form	Spec. No.	Type/ Grade	UNS No.	Class/Condition/Temper	Size, mm	P-No. (5)
1	Low C–Ni	Pipe & tube	B161	. . .	N02201	Annealed	> 125	41
2	Low C–Ni	Pipe & tube	B725	. . .	N02201	Annealed	> 125	41
3	Ni	Pipe & tube	B161	. . .	N02200	Annealed	> 125	41
4	Ni	Pipe & tube	B725	. . .	N02200	Annealed	> 125	41
5	Low C–Ni	Pipe & tube	B161	. . .	N02201	Annealed	≤ 125	41
6	Low C–Ni	Pipe & tube	B725	. . .	N02201	Annealed	≤ 125	41
7	Ni	Pipe & tube	B161	. . .	N02200	Annealed	≤ 125	41
8	Ni	Pipe & tube	B725	. . .	N02200	Annealed	≤ 125	41
9	Ni–Cu	Pipe & tube	B165	. . .	N04400	Annealed	> 125	42
10	Ni–Cu	Pipe & tube	B725	. . .	N04400	Annealed	> 125	42
11	Ni–Fe–Cr	Pipe & tube	B407	. . .	N08800	H.F. or H.F. ann.	. . .	45
12	Ni–Cr–Fe	Pipe & tube	B167	. . .	N06600	H.F. or H.F. ann.	> 125	43
13	Ni–Fe–Cr	Pipe & tube	B407	. . .	N08810	C.D. sol. ann. or H.F. ann.	. . .	45
14	Ni–Fe–Cr	Pipe & tube	B514	. . .	N08810	Annealed	. . .	45
15	Ni–Fe–Cr	Pipe & tube	B407	. . .	N08811	C.D. sol. ann. or H.F. ann.	. . .	45
16	Ni–Cu	Pipe & tube	B165	. . .	N04400	Annealed	≤ 125	42
17	Ni–Cu	Pipe & tube	B725	. . .	N04400	Annealed	≤ 125	42
18	Ni–Fe–Cr–Mo	Pipe & tube	B619	. . .	N08320	Sol. ann.	. . .	45
19	Ni–Fe–Cr–Mo	Pipe & tube	B622	. . .	N08320	Sol. ann.	. . .	45
20	Low C–Ni	Pipe & tube	B161	. . .	N02201	Str. rel.	. . .	41
21	Low C–Ni	Pipe & tube	B725	. . .	N02201	Str. rel.	. . .	41
22	Ni–Fe–Cr	Pipe & tube	B514	. . .	N08800	Annealed	. . .	45
23	Ni–Cr–Fe	Pipe & tube	B167	. . .	N06600	H.F. or H.F. ann.	≤ 125	43
24	Ni–Cr–Fe	Pipe & tube	B167	. . .	N06600	C.D. ann.	> 125	43
25	Ni–Fe–Cr	Pipe & tube	B407	. . .	N08800	C.D. ann.	. . .	45
26	Ni–Fe–Cr–Mo	Pipe & tube	B668	. . .	N08028	Sol. ann.	. . .	45
27	Ni	Pipe & tube	B161	. . .	N02200	Str. rel.	. . .	41
28	Ni	Pipe & tube	B725	. . .	N02200	Str. rel.	. . .	41
29	Cr–Ni–Fe–Mo–Cu–Cb	Pipe & tube	B464	. . .	N08020	Annealed	. . .	45
30	Cr–Ni–Fe–Mo–Cu–Cb	Pipe & tube	B729	. . .	N08020	Annealed	. . .	45

Copyright © 2015 by the American Society of Mechanical Engineers.
No reproduction may be made of this material without written consent of ASME.

Table A-1M Basic Allowable Stresses in Tension for Metals (Metric) (Cont'd) (14)

Numbers in Parentheses Refer to Notes for Appendix A Tables; Specifications Are ASTM Unless Otherwise Indicated

						Basic Allowable Stress, *S*, MPa, at Metal Temperature, °C [Notes (1) and (4b)]								
Line No.	Notes	Min. Temp., °C (6)	Min. Tensile Str., MPa	Min. Yield Str., MPa	Max. Use Temp., °C	Min. Temp. to 40	65	100	125	150	175	200	225	250
1	(2)	−200	345	69	649	46.0	44.7	43.9	43.6	43.3	43.2	43.2	43.2	43.2
2	(2)	−200	345	69	649	46.0	44.7	43.9	43.6	43.3	43.2	43.2	43.2	43.2
3	(2)	−200	379	83	316	55.2	55.2	55.2	55.2	55.2	55.2	55.2	55.2	55.2
4	(2)	−200	379	83	316	55.2	55.2	55.2	55.2	55.2	55.2	55.2	55.2	55.2
5	(2)	−200	345	83	649	55.2	53.8	52.8	52.3	51.9	51.7	51.6	51.6	51.6
6	(2)	−200	345	83	649	55.2	53.8	52.8	52.3	51.9	51.7	51.6	51.6	51.6
7	(2)	−200	379	103	316	68.9	68.9	68.9	68.9	68.9	68.9	68.9	68.9	68.9
8	(2)	−200	379	103	316	68.9	68.9	68.9	68.9	68.9	68.9	68.9	68.9	68.9
9	(2)	−200	483	172	482	115	106	99.7	96.2	93.6	91.9	90.9	90.4	90.4
10	(2)	−200	483	172	482	115	106	99.7	96.2	93.6	91.9	90.9	90.4	90.4
11	(2)	−200	448	172	816	115	115	115	115	115	115	115	115	115
12	(2)	−200	517	172	649	115	115	115	115	115	115	115	115	115
13	(2)(62)	−200	448	172	899	115	115	115	115	115	115	115	115	115
14	(2)(62)	−200	448	172	899	115	115	115	115	115	115	115	115	115
15	(2)(62)	−200	448	172	899	115	115	115	115	115	115	115	115	115
16	(2)	−200	483	193	482	129	119	112	108	105	103	102	101	101
17	(2)	−200	483	193	482	129	119	112	108	105	103	102	101	101
18	(2)	−200	517	193	427	129	129	129	129	129	129	129	129	129
19	(2)	−200	517	193	427	129	129	129	129	129	129	129	129	129
20	(2)	−200	414	207	316	*138*	*138*	*138*	*137*	*137*	*137*	*137*	*137*	*136*
21	(2)	−200	414	207	316	*138*	*138*	*138*	*137*	*137*	*137*	*137*	*137*	*136*
22	(2)	−200	517	207	816	138	138	138	138	138	138	138	138	138
23	(2)	−200	552	207	649	138	138	138	138	138	138	138	138	138
24	(2)	−200	552	207	649	138	138	138	138	138	138	138	138	138
25	(2)(61)	−200	517	207	816	138	138	138	138	138	138	138	138	138
26	. . .	−200	505	215	454	143	*143*	*143*	*143*	*143*	*143*	*143*	*143*	*143*
27	(2)	−200	448	276	316	*149*	*149*	*149*	*149*	*149*	*149*	*149*	*149*	*148*
28	(2)	−200	448	276	316	*149*	*149*	*149*	*149*	*149*	*149*	*149*	*149*	*148*
29	(2)	−200	552	241	427	161	161	161	161	161	161	161	161	161
30	(2)	−200	552	241	427	161	161	161	161	161	161	161	161	161

Copyright © 2015 by the American Society of Mechanical Engineers.
No reproduction may be made of this material without written consent of ASME.

(14)

Table A-1M Basic Allowable Stresses in Tension for Metals (Metric) (Cont'd)

Numbers in Parentheses Refer to Notes for Appendix A Tables; Specifications Are ASTM Unless Otherwise Indicated

Line No.	Basic Allowable Stress, *S*, MPa, at Metal Temperature, °C [Notes (1) and (4b)]												
	275	300	325	350	375	400	425	450	475	500	525	550	575
1	43.2	43.2	43.1	42.9	42.6	42.1	41.5	40.7	**33.1**	**27.4**	**22.8**	**18.7**	**15.6**
2	43.2	43.2	43.1	42.9	42.6	42.1	41.5	40.7	**33.1**	**27.4**	**22.8**	**18.7**	**15.6**
3	55.2	55.2	55.2	...	...	...	...	...	...	...	...	...	...
4	55.2	55.2	55.2	...	...	...	...	...	...	...	...	...	...
5	51.6	51.6	51.6	51.5	51.2	50.7	49.9	**41.4**	**33.1**	**27.4**	**22.8**	**18.7**	**15.6**
6	51.6	51.6	51.6	51.5	51.2	50.7	49.9	**41.4**	**33.1**	**27.4**	**22.8**	**18.7**	**15.6**
7	68.9	68.9	68.9	...	...	...	...	...	...	...	...	...	...
8	68.9	68.9	68.9	...	...	...	...	...	...	...	...	...	...
9	90.4	90.4	90.4	90.4	89.8	89.0	88.0	**79.7**	**59.9**	**55.2**	...	...	...
10	90.4	90.4	90.4	90.4	89.8	89.0	88.0	**79.7**	**59.9**	**55.2**	...	...	...
11	115	115	115	115	115	115	115	115	115	115	115	113	**107**
12	115	115	115	115	115	115	115	115	115	**84.8**	**58.4**	**39.7**	**27.0**
13	115	115	113	110	108	106	104	102	100	98.6	97.1	95.7	**91.8**
14	115	115	113	110	108	106	104	102	100	98.6	97.1	95.7	**91.8**
15	115	115	113	110	108	106	104	102	100	98.6	97.1	95.7	**92.5**
16	101	101	101	101	100	99.6	98.6	**79.7**	**59.9**	**55.2**	...	...	...
17	101	101	101	101	100	99.6	98.6	**79.7**	**59.9**	**55.2**	...	...	...
18	129	129	127	125	122	121	119	119	...	...	...	...	...
19	129	129	127	125	122	121	119	119	...	...	...	...	...
20	*135*	*133*	*130*	...	...	...	...	...	...	...	...	...	...
21	*135*	*133*	*130*	...	...	...	...	...	...	...	...	...	...
22	138	138	138	138	138	138	138	138	138	138	138	136	**107**
23	138	138	138	138	138	138	138	138	138	**84.8**	**58.4**	**39.7**	**27.0**
24	138	138	138	138	138	138	138	138	138	**84.8**	**58.4**	**39.7**	**27.0**
25	138	138	138	138	138	138	138	138	138	138	138	136	**107**
26	**140**	**137**	**133**	**130**	**125**	**122**	**119**	**116**	**113**	...	...	...	...
27	*146*	*144*	*141*	...	...	...	...	...	...	...	...	...	...
28	*146*	*144*	*141*	...	...	...	...	...	...	...	...	...	...
29	161	161	161	161	161	160	157	156	...	...	...	...	...
30	161	161	161	161	161	160	157	156	...	...	...	...	...

Copyright © 2015 by the American Society of Mechanical Engineers.
No reproduction may be made of this material without written consent of ASME.

Table A-1M Basic Allowable Stresses in Tension for Metals (Metric) (Cont'd) (14)

Numbers in Parentheses Refer to Notes for Appendix A Tables; Specifications Are ASTM Unless Otherwise Indicated

Line No.	Basic Allowable Stress, *S*, MPa, at Metal Temperature, °C [Notes (1) and (4b)]												
	600	625	650	675	700	725	750	775	800	825	850	875	900
1	12.9	10.0	8.27	...	...	...	...	...	...	...	...	...	...
2	12.9	10.0	8.27	...	...	...	...	...	...	...	...	...	...
3	...	...	...	...	...	...	...	...	...	...	...	...	...
4	...	...	...	...	...	...	...	...	...	...	...	...	...
5	12.9	10.0	8.27	...	...	...	...	...	...	...	...	...	...
6	12.9	10.0	8.27	...	...	...	...	...	...	...	...	...	...
7	...	...	...	...	...	...	...	...	...	...	...	...	...
8	...	...	...	...	...	...	...	...	...	...	...	...	...
9	...	...	...	...	...	...	...	...	...	...	...	...	...
10	...	...	...	...	...	...	...	...	...	...	...	...	...
11	83.8	63.9	44.7	29.8	15.5	11.7	8.68	7.20	6.25	5.11	...	...	...
12	19.2	15.0	13.8	...	...	...	...	...	...	...	...	...	...
13	75.7	62.6	50.6	41.2	33.6	27.7	22.6	18.3	15.0	11.9	9.03	7.35	5.86
14	75.7	62.6	50.6	41.2	33.6	27.7	22.6	18.3	15.0	11.9	9.03	7.35	5.86
15	84.5	69.5	56.7	46.8	38.5	31.5	25.5	20.7	17.0	13.9	11.2	9.33	7.58
16	...	...	...	...	...	...	...	...	...	...	...	...	...
17	...	...	...	...	...	...	...	...	...	...	...	...	...
18	...	...	...	...	...	...	...	...	...	...	...	...	...
19	...	...	...	...	...	...	...	...	...	...	...	...	...
20	...	...	...	...	...	...	...	...	...	...	...	...	...
21	...	...	...	...	...	...	...	...	...	...	...	...	...
22	83.8	63.9	44.7	29.8	15.5	11.7	8.68	7.20	6.25	5.11	...	...	...
23	19.2	15.0	13.8	...	...	...	...	...	...	...	...	...	...
24	19.2	15.0	13.8	...	...	...	...	...	...	...	...	...	...
25	83.8	63.9	44.7	29.8	15.5	11.7	8.68	7.20	6.25	5.11	...	...	...
26	...	...	...	...	...	...	...	...	...	...	...	...	...
27	...	...	...	...	...	...	...	...	...	...	...	...	...
28	...	...	...	...	...	...	...	...	...	...	...	...	...
29	...	...	...	...	...	...	...	...	...	...	...	...	...
30	...	...	...	...	...	...	...	...	...	...	...	...	...

Copyright © 2015 by the American Society of Mechanical Engineers.
No reproduction may be made of this material without written consent of ASME.

Table A-1M Basic Allowable Stresses in Tension for Metals (Metric) (Cont'd)

Numbers in Parentheses Refer to Notes for Appendix A Tables; Specifications Are ASTM Unless Otherwise Indicated

Line No.	Nominal Composition	Product Form	Spec. No.	Type/ Grade	UNS No.	Class/Condition/Temper	Size, mm	P-No. (5)
31	Ni–Cr–Fe–Mo–Cu	Pipe & tube	B423	. . .	N08825	C.D. ann.	. . .	45
32	Ni–Cr–Fe–Mo–Cu	Pipe & tube	B705	. . .	N08825	Annealed	. . .	45
33	Ni–Cr–Fe–Mo–Cu	Pipe & tube	B619	. . .	N06007	Sol. ann.	. . .	45
34	Ni–Cr–Fe–Mo–Cu	Pipe & tube	B622	. . .	N06007	Sol. ann.	. . .	45
35	Ni–Cr–Fe–Mo–W	Pipe & tube	B619	. . .	N06030	Sol. ann.	. . .	45
36	Ni–Cr–Fe–Mo–W	Pipe & tube	B622	. . .	N06030	Sol. ann.	. . .	45
37	Ni–Cr–Fe–Mo–W	Pipe & tube	B626	. . .	N06030	Sol. ann.	. . .	45
38	Ni–Cr–Fe	Pipe & tube	B167	. . .	N06600	C.D. ann.	≤ 125	43
39	Ni–Cr–Fe	Pipe & tube	B517	. . .	N06600	C.D. ann.	. . .	43
40	Ni–Mo–Cr	Pipe & tube	B619	. . .	N06455	Sol. ann.	. . .	43
41	Ni–Cr–Mo–Fe	Pipe & tube	B619	. . .	N06002	Sol. ann.	. . .	43
42	Ni–Cr–Mo–Fe	Pipe & tube	B622	. . .	N06002	Sol. ann.	. . .	43
43	Low C–Ni–Fe–Cr–Mo–Cu	Pipe & tube	B619	. . .	N08031	Annealed	. . .	45
44	Low C–Ni–Fe–Cr–Mo–Cu	Pipe & tube	B622	. . .	N08031	Annealed	. . .	45
45	Ni–Mo–Cr	Pipe & tube	B622	. . .	N06455	Sol. ann.	. . .	43
46	Ni–Mo–Cr	Pipe & tube	B619	. . .	N10276	Sol. ann.	. . .	43
47	Ni–Mo–Cr	Pipe & tube	B622	. . .	N10276	Sol. ann.	. . .	43
48	Ni–Mo–Cr	Pipe & tube	B626	. . .	N10276	Sol. ann.	. . .	43

Copyright © 2015 by the American Society of Mechanical Engineers.
No reproduction may be made of this material without written consent of ASME.

Table A-1M Basic Allowable Stresses in Tension for Metals (Metric) (Cont'd) (14)

Numbers in Parentheses Refer to Notes for Appendix A Tables; Specifications Are ASTM Unless Otherwise Indicated

						Basic Allowable Stress, *S*, MPa, at Metal Temperature, °C [Notes (1) and (4b)]								
Line No.	Notes	Min. Temp., °C (6)	Min. Tensile Str., MPa	Min. Yield Str., MPa	Max. Use Temp., °C	Min. Temp. to 40	65	100	125	150	175	200	225	250
31	(2)(9)	−200	585	240	538	161	161	161	161	161	161	161	161	161
32	(2)(9)	−200	585	240	538	137	137	137	137	137	137	137	137	137
33	(2)	−200	621	241	538	161	161	161	161	161	161	161	161	161
34	(2)	−200	621	241	427	161	161	161	161	161	161	161	161	161
35	(2)	−200	586	241	427	161	161	161	161	161	161	161	157	154
36	(2)	−200	586	241	427	161	161	161	161	161	161	161	157	154
37	(2)	−200	586	241	427	161	161	161	161	161	161	161	157	154
38	(2)	−200	552	241	649	161	161	161	161	161	161	161	161	161
39	(2)	−200	552	241	649	161	161	161	161	161	161	161	161	161
40	(2)	−200	689	276	427	184	184	184	184	184	184	184	184	184
41	(2)	−200	689	276	816	184	184	184	184	184	184	184	184	178
42	(2)	−200	689	276	816	184	184	184	184	184	184	184	184	178
43	(2)	−200	648	276	427	184	184	184	184	184	177	171	166	162
44	(2)	−200	648	276	427	184	184	184	184	184	177	171	166	162
45	(2)	−200	689	276	427	184	184	184	184	184	184	184	184	184
46	(2)	−200	689	283	677	188	188	188	188	188	188	188	188	187
47	(2)	−200	689	283	677	188	188	188	188	188	188	188	188	187
48	(2)	−200	689	283	677	188	188	188	188	188	188	188	188	187

Copyright © 2015 by the American Society of Mechanical Engineers.
No reproduction may be made of this material without written consent of ASME.

(14)

Table A-1M Basic Allowable Stresses in Tension for Metals (Metric) (Cont'd)

Numbers in Parentheses Refer to Notes for Appendix A Tables; Specifications Are ASTM Unless Otherwise Indicated

Line No.	Basic Allowable Stress, *S*, MPa, at Metal Temperature, °C [Notes (1) and (4b)]												
	275	300	325	350	375	400	425	450	475	500	525	550	575
31	161	161	161	161	161	160	159	158	157	156	155	153	...
32	137	137	137	137	136	136	135	135	134	133	131	129	...
33	160	158	156	154	153	152	151	150	149	**136**	**132**	**130**	...
34	160	158	156	154	153	152	151	150	...	...	...	...	...
35	151	148	146	143	141	138	136	136	...	...	...	...	...
36	151	148	146	143	141	138	136	136	...	...	...	...	...
37	151	148	146	143	141	138	136	136	...	...	...	...	...
38	161	161	161	161	161	161	161	161	161	**84.8**	**58.4**	**39.7**	**27.0**
39	161	161	161	161	161	161	161	161	161	**84.8**	**58.4**	**39.7**	**27.0**
40	184	184	184	184	183	180	178	178	...	...	...	...	...
41	173	169	165	162	160	158	157	155	154	**135**	**134**	**133**	**129**
42	173	169	165	162	160	158	157	155	154	**135**	**134**	**133**	**129**
43	158	155	152	149	**74.2**	**61.1**	**50.3**	**49.6**	...	...	...	...	...
44	158	155	152	149	**74.2**	**61.1**	**50.3**	**49.6**	...	...	...	...	...
45	184	184	184	184	182	180	178	178	...	...	...	...	...
46	182	177	172	168	165	162	159	157	156	155	154	**143**	**119**
47	182	177	172	168	165	162	159	157	156	155	154	**143**	**119**
48	182	177	172	168	165	162	159	157	156	155	154	**143**	**119**

Copyright © 2015 by the American Society of Mechanical Engineers.
No reproduction may be made of this material without written consent of ASME.

Table A-1M Basic Allowable Stresses in Tension for Metals (Metric) (Cont'd) (14)

Numbers in Parentheses Refer to Notes for Appendix A Tables; Specifications Are ASTM Unless Otherwise Indicated

Line No.	Basic Allowable Stress, *S*, MPa, at Metal Temperature, °C [Notes (1) and (4b)]												
	600	625	650	675	700	725	750	775	800	825	850	875	900
31	...	...	...	...	...	...	...	...	...	...	...	...	...
32	...	...	...	...	...	...	...	...	...	...	...	...	...
33	...	...	...	...	...	...	...	...	...	...	...	...	...
34	...	...	...	...	...	...	...	...	...	...	...	...	...
35	...	...	...	...	...	...	...	...	...	...	...	...	...
36	...	...	...	...	...	...	...	...	...	...	...	...	...
37	...	...	...	...	...	...	...	...	...	...	...	...	...
38	19.2	15.0	13.8	...	...	...	...	...	...	...	...	...	...
39	19.2	15.0	13.8	...	...	...	...	...	...	...	...	...	...
40	...	...	...	...	...	...	...	...	...	...	...	...	...
41	115	94.2	77.3	64.9	54.7	44.7	36.1	29.2	23.6	20.7	...	...	...
42	115	94.2	77.3	64.9	54.7	44.7	36.1	29.2	23.6	20.7	...	...	...
43	...	...	...	...	...	...	...	...	...	...	...	...	...
44	...	...	...	...	...	...	...	...	...	...	...	...	...
45	...	...	...	...	...	...	...	...	...	...	...	...	...
46	98.4	81.6	67.0	54.5	53.8	...	...	...	...	...	...	...	...
47	98.4	81.6	67.0	54.5	53.8	...	...	...	...	...	...	...	...
48	98.4	81.6	67.0	54.5	53.8	...	...	...	...	...	...	...	...

Copyright © 2015 by the American Society of Mechanical Engineers.
No reproduction may be made of this material without written consent of ASME.

(14)

Table A-1M Basic Allowable Stresses in Tension for Metals (Metric) (Cont'd)

Numbers in Parentheses Refer to Notes for Appendix A Tables; Specifications Are ASTM Unless Otherwise Indicated

Line No.	Nominal Composition	Product Form	Spec. No.	Type/ Grade	UNS No.	Class/Condition/Temper	Size, mm	P-No. (5)
49	Ni–Cu	Pipe & tube	B165	. . .	N04400	Str. rel.	. . .	42
50	Ni–Cu	Pipe & tube	B725	. . .	N04400	Str. rel.	. . .	42
51	Fe–Ni–Cr–Mo–Cu–N	Pipe & tube	B675	. . .	N08367	Annealed	> 5	45
52	Fe–Ni–Cr–Mo–Cu–N	Pipe & tube	B690	. . .	N08367	Annealed	> 5	45
53	Fe–Ni–Cr–Mo–Cu–N	Pipe & tube	B804	. . .	N08367	Annealed	> 5	45
54	Fe–Ni–Cr–Mo–Cu–N	Pipe & tube	B675	. . .	N08367	Annealed	≤ 5	45
55	Fe–Ni–Cr–Mo–Cu–N	Pipe & tube	B690	. . .	N08367	Annealed	≤ 5	45
56	Fe–Ni–Cr–Mo–Cu–N	Pipe & tube	B804	. . .	N08367	Annealed	≤ 5	45
57	Ni–Cr–Mo	Pipe & tube	B619	. . .	N06022	Sol. ann.	. . .	43
58	Ni–Cr–Mo	Pipe & tube	B622	. . .	N06022	Sol. ann.	. . .	43
59	Ni–Cr–Mo	Pipe & tube	B619	. . .	N06035	Sol. ann.	. . .	43
60	Ni–Cr–Mo	Pipe & tube	B622	. . .	N06035	Sol. ann.	. . .	43
61	Ni–Cr–Mo	Pipe & tube	B626	. . .	N06035	Sol. ann.	. . .	43
62	Low C–Ni–Cr–Mo	Pipe & tube	B619	. . .	N06059	Sol. ann.	. . .	43
63	Low C–Ni–Cr–Mo	Pipe & tube	B622	. . .	N06059	Sol. ann.	. . .	43
64	Low C–Ni–Cr–Mo	Pipe & tube	B619	. . .	N06200	Sol. ann.	All	43
65	Low C–Ni–Cr–Mo	Pipe & tube	B622	. . .	N06200	Sol. ann.	All	43
66	Low C–Ni–Cr–Mo	Pipe & tube	B626	. . .	N06200	Sol. ann.	All	43
67	Ni–Mo	Pipe & tube	B619	. . .	N10001	Sol. ann.	. . .	44
68	Ni–Mo	Pipe & tube	B622	. . .	N10001	Sol. ann.	. . .	44
69	Ni–Mo	Pipe & tube	B619	. . .	N10665	Sol. ann.	. . .	44
70	Ni–Mo	Pipe & tube	B622	. . .	N10665	Sol. ann.	. . .	44
71	Ni–Mo	Pipe & tube	B619	. . .	N10675	Sol. ann.	. . .	44
72	Ni–Mo	Pipe & tube	B622	. . .	N10675	Sol. ann.	. . .	44
73	Ni–Mo	Pipe & tube	B626	. . .	N10675	Sol. ann.	. . .	44
74	Ni–Cr–Mo–Cb	Pipe & tube	B444	. . .	N06625	Annealed	. . .	43
75	Ni–Cr–W–Mo	Pipe & tube	B619	. . .	N06230	Sol. ann.	. . .	43
76	Ni–Cr–W–Mo	Pipe & tube	B622	. . .	N06230	Sol. ann.	. . .	43
77	Ni–Cr–W–Mo	Pipe & tube	B626	. . .	N06230	Sol. ann.	. . .	43
78	Low C–Ni	Plate	B162	. . .	N02201	H.R. ann.	. . .	41
79	Low C–Ni	Plate	B162	. . .	N02201	H.R. as R.	. . .	41
80	Ni	Plate	B162	. . .	N02200	H.R. ann.	. . .	41
81	Ni	Plate	B162	. . .	N02200	H.R. as R.	. . .	41
82	Ni–Fe–Cr	Pl. & sht.	B409	. . .	N08810	Annealed	All	45
83	Ni–Fe–Cr	Pl. & sht.	B409	. . .	N08811	Annealed	All	45

Copyright © 2015 by the American Society of Mechanical Engineers.
No reproduction may be made of this material without written consent of ASME.

Table A-1M Basic Allowable Stresses in Tension for Metals (Metric) (Cont'd) (14)

Numbers in Parentheses Refer to Notes for Appendix A Tables; Specifications Are ASTM Unless Otherwise Indicated

						Basic Allowable Stress, *S*, MPa, at Metal Temperature, °C [Notes (1) and (4b)]								
Line No.	Notes	Min. Temp., °C (6)	Min. Tensile Str., MPa	Min. Yield Str., MPa	Max. Use Temp., °C	Min. Temp. to 40	65	100	125	150	175	200	225	250
49	(2)(54)	−200	586	379	260	*195*	*195*	*195*	*195*	*195*	*195*	*195*	*195*	*195*
50	(2)(54)	−200	586	379	260	*195*	*195*	*195*	*195*	*195*	*195*	*195*	*195*	*195*
51	(2)	−200	655	310	427	207	207	207	207	*206*	*202*	*198*	*195*	*192*
52	(2)	−200	655	310	427	207	207	207	207	*206*	*202*	*198*	*195*	*192*
53	(2)	−200	655	310	427	207	207	207	207	*206*	*202*	*198*	*195*	*192*
54	(2)	−200	689	310	427	207	207	207	207	*206*	*202*	*198*	*195*	*192*
55	(2)	−200	689	310	427	207	207	207	207	*206*	*202*	*198*	*195*	*192*
56	(2)	−200	689	310	427	207	207	207	207	*206*	*202*	*198*	*195*	*192*
57	(2)	−200	689	310	427	207	207	207	207	207	207	207	207	202
58	(2)	−200	689	310	427	207	207	207	207	207	207	207	207	202
59	(2)	−200	586	241	427	161	161	161	*161*	*161*	*161*	**154**	**149**	**144**
60	(2)	−200	586	241	427	161	161	161	*161*	*161*	*161*	**154**	**149**	**144**
61	(2)	−200	586	241	427	161	161	161	*161*	*161*	*161*	**154**	**149**	**144**
62	(2)	−200	689	310	427	207	207	207	207	207	207	207	207	206
63	(2)	−200	689	310	427	207	207	207	207	207	207	207	207	206
64	(2)	−200	689	310	427	207	207	207	207	207	207	207	**207**	**200**
65	(2)	−200	689	310	427	207	207	207	207	207	207	207	**207**	**200**
66	(2)	−200	689	310	427	207	207	207	207	207	207	207	**207**	**200**
67	(2)	−200	689	310	427	207	207	207	207	207	207	207	207	207
68	(2)	−200	689	310	427	207	207	207	207	207	207	207	207	207
69	(2)	−200	758	352	427	234	234	234	234	234	234	234	234	234
70	(2)	−200	758	352	427	234	234	234	234	234	234	234	234	234
71	(2)	−200	758	352	427	234	234	234	234	234	234	234	234	234
72	(2)	−200	758	352	427	234	234	234	234	234	234	234	234	234
73	(2)	−200	758	352	427	234	234	234	234	234	234	234	234	234
74	(2)(64)(70)	−200	827	414	649	276	276	276	*274*	*273*	*272*	*270*	*269*	*267*
75	(2)	−200	758	310	899	207	*207*	*207*	*207*	*207*	*207*	*207*	*207*	*207*
76	(2)	−200	758	310	899	207	*207*	*207*	*207*	*207*	*207*	*207*	*207*	*207*
77	(2)	−200	758	310	899	207	*207*	*207*	*207*	*207*	*207*	*207*	*207*	*207*
78	. . .	−200	345	83	649	55.2	53.8	52.8	52.3	51.9	51.7	51.6	51.6	51.6
79	. . .	−200	345	83	649	55.2	53.8	52.8	52.3	51.9	51.7	51.6	51.6	51.6
80	. . .	−200	379	103	316	68.9	68.9	68.9	68.9	68.9	68.9	68.9	68.9	68.9
81	. . .	−200	379	138	316	91.9	91.9	91.9	91.9	91.9	91.9	91.9	91.9	91.9
82	. . .	−200	448	172	899	115	115	115	115	115	115	115	115	115
83	. . .	−200	448	172	899	115	115	115	115	115	115	115	115	115

Copyright © 2015 by the American Society of Mechanical Engineers.
No reproduction may be made of this material without written consent of ASME.

(14)

Table A-1M Basic Allowable Stresses in Tension for Metals (Metric) (Cont'd)

Numbers in Parentheses Refer to Notes for Appendix A Tables; Specifications Are ASTM Unless Otherwise Indicated

Line No.	Basic Allowable Stress, *S*, MPa, at Metal Temperature, °C [Notes (1) and (4b)]												
	275	300	325	350	375	400	425	450	475	500	525	550	575
49	*195*	...	...	...	...	...	...	...	...	...	...	...	...
50	*195*	...	...	...	...	...	...	...	...	...	...	...	...
51	188	183	179	176	173	170	168	167	...	...	...	...	...
52	188	183	179	176	173	170	168	167	...	...	...	...	...
53	188	183	179	176	173	170	168	167	...	...	...	...	...
54	188	183	179	176	173	170	168	167	...	...	...	...	...
55	188	183	179	176	173	170	168	167	...	...	...	...	...
56	188	183	179	176	173	170	168	167	...	...	...	...	...
57	197	193	189	185	182	180	177	177	...	...	...	...	...
58	197	193	189	185	182	180	177	177	...	...	...	...	...
59	**140**	**137**	**135**	**133**	**132**	**131**	**129**	**128**	...	...	...	...	...
60	**140**	**137**	**135**	**133**	**132**	**131**	**129**	**128**	...	...	...	...	...
61	**140**	**137**	**135**	**133**	**132**	**131**	**129**	**128**	...	...	...	...	...
62	202	197	192	188	184	180	176	176	...	...	...	...	...
63	202	197	192	188	184	180	176	176	...	...	...	...	...
64	**194**	**188**	**184**	**180**	**177**	**175**	**174**	**173**	...	...	...	...	...
65	**194**	**188**	**184**	**180**	**177**	**175**	**174**	**173**	...	...	...	...	...
66	**194**	**188**	**184**	**180**	**177**	**175**	**174**	**173**	...	...	...	...	...
67	207	207	207	207	207	207	206	206	...	...	...	...	...
68	207	207	207	207	207	207	206	206	...	...	...	...	...
69	234	234	234	234	234	234	234	234	...	...	...	...	...
70	234	234	234	234	234	234	234	234	...	...	...	...	...
71	234	234	234	234	234	**233**	**231**	**230**	...	...	...	...	...
72	234	234	234	234	234	**233**	**231**	**230**	...	...	...	...	...
73	234	234	234	234	234	**233**	**231**	**230**	...	...	...	...	...
74	*265*	*262*	*260*	*257*	*255*	*252*	*251*	*249*	*247*	*245*	*242*	**215**	**194**
75	*207*	**207**	**203**	**199**	**197**	**196**	**195**	**195**	**195**	**195**	**195**	**195**	183
76	*207*	**207**	**203**	**199**	**197**	**196**	**195**	**195**	**195**	**195**	**195**	**195**	183
77	*207*	**207**	**203**	**199**	**197**	**196**	**195**	**195**	**195**	**195**	**195**	**195**	183
78	51.6	51.6	51.6	51.5	51.2	50.7	49.9	**41.4**	**33.1**	**27.4**	**22.8**	**18.7**	**15.6**
79	51.6	51.6	51.6	51.5	51.2	50.7	49.9	**41.4**	**33.1**	**27.4**	**22.8**	**18.7**	**15.6**
80	68.9	68.9	68.9	...	...	...	...	...	...	...	...	...	...
81	91.9	91.9	91.9	...	...	...	...	...	...	...	...	...	...
82	115	115	113	110	108	105	104	102	100	98.6	97.1	95.9	**91.8**
83	115	115	113	110	108	105	104	102	100	98.6	97.1	96.1	**94.1**

Copyright © 2015 by the American Society of Mechanical Engineers.
No reproduction may be made of this material without written consent of ASME.

Table A-1M Basic Allowable Stresses in Tension for Metals (Metric) (Cont'd) (14)

Numbers in Parentheses Refer to Notes for Appendix A Tables; Specifications Are ASTM Unless Otherwise Indicated

Line No.	Basic Allowable Stress, *S*, MPa, at Metal Temperature, °C [Notes (1) and (4b)]												
	600	625	650	675	700	725	750	775	800	825	850	875	900
49	...	...	...	...	...	...	...	...	...	...	...	...	...
50	...	...	...	...	...	...	...	...	...	...	...	...	...
51	...	...	...	...	...	...	...	...	...	...	...	...	...
52	...	...	...	...	...	...	...	...	...	...	...	...	...
53	...	...	...	...	...	...	...	...	...	...	...	...	...
54	...	...	...	...	...	...	...	...	...	...	...	...	...
55	...	...	...	...	...	...	...	...	...	...	...	...	...
56	...	...	...	...	...	...	...	...	...	...	...	...	...
57	...	...	...	...	...	...	...	...	...	...	...	...	...
58	...	...	...	...	...	...	...	...	...	...	...	...	...
59	...	...	...	...	...	...	...	...	...	...	...	...	...
60	...	...	...	...	...	...	...	...	...	...	...	...	...
61	...	...	...	...	...	...	...	...	...	...	...	...	...
62	...	...	...	...	...	...	...	...	...	...	...	...	...
63	...	...	...	...	...	...	...	...	...	...	...	...	...
64	...	...	...	...	...	...	...	...	...	...	...	...	...
65	...	...	...	...	...	...	...	...	...	...	...	...	...
66	...	...	...	...	...	...	...	...	...	...	...	...	...
67	...	...	...	...	...	...	...	...	...	...	...	...	...
68	...	...	...	...	...	...	...	...	...	...	...	...	...
69	...	...	...	...	...	...	...	...	...	...	...	...	...
70	...	...	...	...	...	...	...	...	...	...	...	...	...
71	...	...	...	...	...	...	...	...	...	...	...	...	...
72	...	...	...	...	...	...	...	...	...	...	...	...	...
73	...	...	...	...	...	...	...	...	...	...	...	...	...
74	**156**	**136**	**91.0**	...	...	...	...	...	...	...	...	...	...
75	153	128	107	89.7	74.7	61.9	50.8	41.1	32.6	25.2	18.9	13.8	10.2
76	153	128	107	89.7	74.7	61.9	50.8	41.1	32.6	25.2	18.9	13.8	10.2
77	153	128	107	89.7	74.7	61.9	50.8	41.1	32.6	25.2	18.9	13.8	10.2
78	**12.9**	**10.0**	**8.27**	...	...	...	...	...	...	...	...	...	...
79	**12.9**	**10.0**	**8.27**	...	...	...	...	...	...	...	...	...	...
80	...	...	...	...	...	...	...	...	...	...	...	...	...
81	...	...	...	...	...	...	...	...	...	...	...	...	...
82	**75.7**	**62.6**	**50.6**	**41.2**	**33.6**	**27.7**	**22.6**	**18.3**	**15.0**	**11.9**	**9.03**	**7.35**	**5.86**
83	**85.5**	**69.3**	**56.8**	**46.8**	**38.6**	**31.5**	**25.5**	**20.6**	**17.1**	**13.8**	**10.7**	**7.98**	**6.20**

Copyright © 2015 by the American Society of Mechanical Engineers.
No reproduction may be made of this material without written consent of ASME.

(14)

Table A-1M Basic Allowable Stresses in Tension for Metals (Metric) (Cont'd)

Numbers in Parentheses Refer to Notes for Appendix A Tables; Specifications Are ASTM Unless Otherwise Indicated

Line No.	Nominal Composition	Product Form	Spec. No.	Type/ Grade	UNS No.	Class/Condition/Temper	Size, mm	P-No. (5)
84	Ni–Fe–Cr–Mo	Pl. & sht.	B620	. . .	N08320	Sol. ann.	All	45
85	Ni–Cu	Plate	B127	. . .	N04400	H.R. ann.	. . .	42
86	Ni–Cr–Fe–Mo–Cu	Pl. & sht.	B582	. . .	N06007	Sol. ann.	> 19	45
87	Ni–Fe–Cr	Pl. & sht.	B409	. . .	N08800	Annealed	All	45
88	Ni–Fe–Cr–Mo	Pl. & sht.	B709	. . .	N08028	Sol. ann.	All	45
89	Ni–Cr–Fe–Mo–Cu	Plate	B424	. . .	N08825	Annealed	. . .	45
90	Cr–Ni–Fe–Mo–Cu–Cb	Pl. & sht.	B463	. . .	N08020	Annealed	All	45
91	Ni–Cr–Fe–Mo–W	Pl. & sht.	B582	. . .	N06030	Sol. ann.	All	45
92	Ni–Cr–Fe–Mo–Cu	Pl. & sht.	B582	. . .	N06007	Sol. ann.	≤ 19	45
93	Ni–Cr–Fe–Mo	Pl. & sht.	B435	. . .	N06002	H.R sol. ann.	All	43
94	Ni–Cr–Fe	Plate	B168	. . .	N06600	H.R. ann.	. . .	43
95	Ni–Cr–Fe	Plate	B168	. . .	N06600	H.R. as R.	. . .	43
96	Ni–Cu	Plate	B127	. . .	N04400	H.R. as R.	. . .	42
97	Low C–Ni–Fe–Cr–Mo–Cu	Pl. & sht.	B625	. . .	N08031	Annealed	All	45
98	Low C–Ni–Mo–Cr	Pl. & sht.	B575	. . .	N06455	Sol. ann.	All	43
99	Low C–Ni–Mo–Cr	Pl. & sht.	B575	. . .	N10276	Sol. ann.	All	43
100	Ni–Cr–Mo–Cb	Plate	B443	. . .	N06625	Annealed	All	43
101	Ni–Cr–W–Mo	Pl. & sht.	B435	. . .	N06230	Sol. ann.	All	43
102	Ni–Cr–Mo–Cb	Sheet	B575	. . .	N06022	Sol. ann.	< 5	43
103	Ni–Cr–Mo	Pl. & sht.	B575	. . .	N06035	Sol. ann.	All	43
104	Fe–Ni–Cr–Mo–Cu–N	Pl. & sht.	B688	. . .	N08367	Annealed	> 5	45
105	Fe–Ni–Cr–Mo–Cu–N	Pl. & sht.	B688	. . .	N08367	Annealed	≤ 5	45
106	Low C–Ni–Cr–Mo	Pl. & sht.	B575	. . .	N06059	Sol. ann.	All	43
107	Low C–Ni–Cr–Mo	Pl. & sht.	B575	. . .	N06200	Sol. ann.	All	43
108	Ni–Mo	Plate	B333	. . .	N10001	Sol. ann.	≥ 5, ≤ 64	44
109	Ni–Mo	Sheet	B333	. . .	N10001	Sol. ann.	≤ 5	44
110	Ni–Mo	Pl. & sht.	B333	. . .	N10665	Sol. ann.	All	44
111	Ni–Mo	Pl. & sht.	B333	. . .	N10675	Sol. ann.	All	44
112	Low C–Ni	Forg. & ftg.	B160	. . .	N02201	Annealed	All	41
113	Low C–Ni	Forg. & ftg.	B366	. . .	N02201	Annealed	All	41

Copyright © 2015 by the American Society of Mechanical Engineers.
No reproduction may be made of this material without written consent of ASME.

Table A-1M Basic Allowable Stresses in Tension for Metals (Metric) (Cont'd) (14)

Numbers in Parentheses Refer to Notes for Appendix A Tables; Specifications Are ASTM Unless Otherwise Indicated

						Basic Allowable Stress, *S*, MPa, at Metal Temperature, °C [Notes (1) and (4b)]								
Line No.	Notes	Min. Temp., °C (6)	Min. Tensile Str., MPa	Min. Yield Str., MPa	Max. Use Temp., °C	Min. Temp. to 40	65	100	125	150	175	200	225	250
84	. . .	−200	517	193	427	129	129	129	129	129	129	129	129	129
85	. . .	−200	483	193	482	129	119	112	108	105	103	102	101	101
86	. . .	−200	586	207	538	138	138	138	138	138	138	138	138	138
87	. . .	−200	517	207	816	138	138	138	138	138	138	138	138	138
88	. . .	−200	505	215	454	143	*143*	*143*	*143*	*143*	*143*	*143*	*143*	*143*
89	(9)	−200	585	240	538	161	161	161	161	161	161	161	161	161
90	. . .	−200	552	241	427	161	161	161	161	161	161	161	161	161
91	. . .	−200	586	241	427	161	*161*	*161*	*161*	*161*	*161*	*161*	**157**	**154**
92	. . .	−200	621	241	538	161	161	161	161	161	161	161	161	161
93	. . .	−200	655	241	427	161	161	161	161	161	161	161	161	156
94	. . .	−200	552	241	649	161	161	161	161	161	161	161	161	161
95	. . .	−200	586	241	649	161	161	161	161	161	161	161	161	161
96	. . .	−200	517	276	482	*172*	*172*	*172*	*171*	*170*	168	165	164	162
97	. . .	−200	648	276	427	184	184	184	184	184	177	171	166	162
98	. . .	−200	689	276	427	184	184	184	184	184	184	184	184	184
99	. . .	−200	689	283	677	188	188	188	188	188	188	188	188	187
100	(64)(70)	−200	758	379	649	253	253	253	*251*	*250*	*249*	*248*	*247*	*245*
101	. . .	−200	758	310	899	207	*207*	*207*	*207*	*207*	*207*	*207*	*207*	*207*
102	. . .	−200	689	310	427	207	207	207	207	207	207	207	207	202
103	. . .	−200	586	241	427	161	161	161	*161*	*161*	*161*	**154**	**149**	**144**
104	. . .	−200	655	310	427	207	207	207	207	*206*	*202*	*198*	*195*	*192*
105	. . .	−200	689	310	427	207	207	207	207	207	207	206	199	193
106	. . .	−200	689	310	427	207	207	207	207	207	207	207	207	206
107	. . .	−200	689	310	427	207	207	207	207	207	207	207	**207**	**200**
108	. . .	−200	689	310	427	207	207	207	207	207	207	207	207	207
109	. . .	−200	793	345	427	230	230	230	230	230	230	230	230	230
110	. . .	−200	758	352	427	234	234	234	234	234	234	234	234	234
111	. . .	−200	758	352	427	234	*234*	*234*	*234*	*234*	*234*	*234*	*234*	*234*
112	(2)(9)(9a)	−200	345	69	649	46.0	44.7	43.9	43.6	43.3	43.2	43.2	43.2	43.2
113	(2)(32)(74)	−200	345	69	649	46.0	44.7	43.9	43.6	43.3	43.2	43.2	43.2	43.2

Copyright © 2015 by the American Society of Mechanical Engineers.
No reproduction may be made of this material without written consent of ASME.

(14)

Table A-1M Basic Allowable Stresses in Tension for Metals (Metric) (Cont'd)

Numbers in Parentheses Refer to Notes for Appendix A Tables; Specifications Are ASTM Unless Otherwise Indicated

Line No.	Basic Allowable Stress, *S*, MPa, at Metal Temperature, °C [Notes (1) and (4b)]												
	275	300	325	350	375	400	425	450	475	500	525	550	575
84	129	129	127	125	122	121	119	119	...	...	...	...	...
85	101	101	101	101	100	99.6	98.6	79.7	59.9	55.2	...	...	...
86	138	135	134	132	131	130	129	128	128	127	127	126	...
87	138	138	138	138	138	138	138	138	138	138	138	136	107
88	140	137	133	130	125	122	119	116	113	...	...	...	...
89	161	161	161	161	161	160	159	158	157	156	155	153	...
90	161	161	161	161	161	160	157	156	...	...	...	...	...
91	151	148	146	143	141	138	136	136	...	...	...	...	...
92	160	158	156	154	153	152	151	150	149	136	132	130	...
93	152	148	145	142	140	138	137	137	...	...	...	...	...
94	161	161	161	161	161	161	161	161	161	84.8	58.4	39.7	27.0
95	161	161	161	161	161	161	161	161	161	84.8	58.4	39.7	27.0
96	161	160	159	158	156	136	102	63.8	33.5	27.6	...	...	...
97	158	155	152	149	146	144	141	140	...	...	...	...	...
98	184	184	184	184	182	180	178	176	...	...	...	...	...
99	182	177	172	168	165	162	159	157	156	155	154	143	119
100	*243*	*241*	*238*	*236*	*233*	*231*	*230*	*228*	*227*	*225*	*222*	215	194
101	*207*	207	203	199	197	196	195	195	195	195	195	195	183
102	197	193	189	185	182	180	177	177	...	...	...	...	...
103	140	137	135	133	132	131	129	128	...	...	...	...	...
104	188	183	179	176	173	170	168	167	...	...	...	...	...
105	188	183	179	176	173	170	168	167	...	...	...	...	...
106	202	197	192	188	184	180	176	176	...	...	...	...	...
107	194	188	184	180	177	175	174	173	...	...	...	...	...
108	207	207	207	207	207	207	206	206	...	...	...	...	...
109	230	230	230	230	230	230	229	229	...	...	...	...	...
110	234	234	234	234	234	234	234	234	...	...	...	...	...
111	*234*	*234*	*234*	*234*	*234*	233	231	230	...	...	...	...	...
112	43.2	43.2	43.1	42.9	42.6	42.1	41.5	40.7	33.1	27.4	22.8	18.7	15.6
113	43.2	43.2	43.1	42.9	42.6	42.1	41.5	40.7	33.1	27.4	22.8	18.7	15.6

Copyright © 2015 by the American Society of Mechanical Engineers.
No reproduction may be made of this material without written consent of ASME.

Table A-1M Basic Allowable Stresses in Tension for Metals (Metric) (Cont'd) (14)

Numbers in Parentheses Refer to Notes for Appendix A Tables; Specifications Are ASTM Unless Otherwise Indicated

Line No.	Basic Allowable Stress, *S*, MPa, at Metal Temperature, °C [Notes (1) and (4b)]												
	600	625	650	675	700	725	750	775	800	825	850	875	900
84	...	...	...	...	...	...	...	...	...	...	...	...	...
85	...	...	...	...	...	...	...	...	...	...	...	...	...
86	...	...	...	...	...	...	...	...	...	...	...	...	...
87	**83.8**	**63.9**	**44.7**	**29.8**	**15.5**	**11.7**	**8.68**	**7.20**	**6.25**	**5.11**	...	...	...
88	...	...	...	...	...	...	...	...	...	...	...	...	...
89	...	...	...	...	...	...	...	...	...	...	...	...	...
90	...	...	...	...	...	...	...	...	...	...	...	...	...
91	...	...	...	...	...	...	...	...	...	...	...	...	...
92	...	...	...	...	...	...	...	...	...	...	...	...	...
93	...	...	...	...	...	...	...	...	...	...	...	...	...
94	**19.2**	**15.0**	**13.8**	...	...	...	...	...	...	...	...	...	...
95	**19.2**	**15.0**	**13.8**	...	...	...	...	...	...	...	...	...	...
96	...	...	...	...	...	...	...	...	...	...	...	...	...
97	...	...	...	...	...	...	...	...	...	...	...	...	...
98	...	...	...	...	...	...	...	...	...	...	...	...	...
99	**98.4**	**81.6**	**67.0**	**54.5**	**53.8**	...	...	...	...	...	...	...	...
100	**156**	**136**	**91.0**	...	...	...	...	...	...	...	...	...	...
101	153	128	107	89.7	74.7	61.9	50.8	41.1	32.6	25.2	18.9	13.8	10.2
102	...	...	...	...	...	...	...	...	...	...	...	...	...
103	...	...	...	...	...	...	...	...	...	...	...	...	...
104	...	...	...	...	...	...	...	...	...	...	...	...	...
105	...	...	...	...	...	...	...	...	...	...	...	...	...
106	...	...	...	...	...	...	...	...	...	...	...	...	...
107	...	...	...	...	...	...	...	...	...	...	...	...	...
108	...	...	...	...	...	...	...	...	...	...	...	...	...
109	...	...	...	...	...	...	...	...	...	...	...	...	...
110	...	...	...	...	...	...	...	...	...	...	...	...	...
111	...	...	...	...	...	...	...	...	...	...	...	...	...
112	**12.9**	**10.0**	**8.27**	...	...	...	...	...	...	...	...	...	...
113	**12.9**	**10.0**	**8.27**	...	...	...	...	...	...	...	...	...	...

Copyright © 2015 by the American Society of Mechanical Engineers.
No reproduction may be made of this material without written consent of ASME.

(14)

Table A-1M Basic Allowable Stresses in Tension for Metals (Metric) (Cont'd)

Numbers in Parentheses Refer to Notes for Appendix A Tables; Specifications Are ASTM Unless Otherwise Indicated

Line No.	Nominal Composition	Product Form	Spec. No.	Type/ Grade	UNS No.	Class/Condition/Temper	Size, mm	P-No. (5)
114	Ni	Forg. & ftg.	B366	. . .	N02200	Annealed	All	41
115	Ni	Forg. & ftg.	B564	. . .	N02200	. . .	. . .	41
116	Ni	Forg. & ftg.	B564	. . .	N02200	Annealed	All	41
117	Ni–Fe–Cr	Forg. & ftg.	B564	. . .	N08810	Annealed	. . .	45
118	Ni–Fe–Cr	Forg. & ftg.	B564	. . .	N08811	Annealed	. . .	45
119	Ni–Fe–Cr	Fittings	B366	. . .	N08810	Annealed	All	45
120	Cr–Ni–Fe–Mo–Cu	Fittings	B366	. . .	N08811	Annealed	All	45
121	Ni–Cu	Forg. & ftg.	B564	. . .	N04400	Annealed	. . .	42
122	Ni–Cu	Forg. & ftg.	B366	. . .	N04400	Annealed	All	42
123	Ni–Cr–Fe	Forg. & ftg.	B366	. . .	N06600	Annealed	All	43
124	Ni–Cr–Fe–Mo–W	Forg. & ftg.	B366	. . .	N06030	Sol. ann.	All	45
125	Ni–Cr–Fe–Mo–W	Forg. & ftg.	B462	. . .	N06030	Sol. ann.	All	45
126	Ni–Fe–Cr	Forg. & ftg.	B366	. . .	N08800	C.D. ann.	All	45
127	Ni–Fe–Cr	Forg. & ftg.	B564	. . .	N08800	Annealed	. . .	45
128	Cr–Ni–Fe–Mo–Cu–Cb	Forg. & ftg.	B366	. . .	N08020	Annealed	All	45
129	Cr–Ni–Fe–Mo–Cu–Cb	Forg. & ftg.	B462	. . .	N08020	Annealed	. . .	45
130	Ni–Cr–Fe	Forg. & ftg.	B564	. . .	N06600	Annealed	All	43
131	Cr–Ni–Fe–Mo–Cu	Fittings	B366	. . .	N08825	C.D. ann.	All	45
132	Cr–Ni–Fe–Mo–Cu	Forgings	B564	. . .	N08825	Annealed	. . .	45
133	Ni–Cr–Mo–Fe	Forg. & ftg.	B366	. . .	N06002	Sol. ann.	All	43
134	Low C–Ni–Fe–Cr–Mo–Cu	Forg. & ftg.	B366	. . .	N08031	Sol. ann.	All	45
135	Low C–Ni–Fe–Cr–Mo–Cu	Forg. & ftg.	B564	. . .	N08031	Annealed H.W.	All	45
136	Ni–Mo–Cr	Forg. & ftg.	B366	. . .	N10276	Sol. ann.	All	43
137	Ni–Mo–Cr	Forg. & ftg.	B564	. . .	N10276	Sol. ann.	All	43
138	Ni–Mo	Forg. & ftg.	B366	. . .	N10001	Sol. ann.	All	44

Copyright © 2015 by the American Society of Mechanical Engineers.
No reproduction may be made of this material without written consent of ASME.

Table A-1M Basic Allowable Stresses in Tension for Metals (Metric) (Cont'd) (14)

Numbers in Parentheses Refer to Notes for Appendix A Tables; Specifications Are ASTM Unless Otherwise Indicated

						Basic Allowable Stress, *S*, MPa, at Metal Temperature, °C [Notes (1) and (4b)]								
Line No.	Notes	Min. Temp., °C (6)	Min. Tensile Str., MPa	Min. Yield Str., MPa	Max. Use Temp., °C	Min. Temp. to 40	65	100	125	150	175	200	225	250
114	(2)(32)(74)	−200	379	83	260	55.2	55.2	55.2	55.2	55.2	55.2	55.2	55.2	55.2
115	(2)(32)	−200	379	83	260	55.2	55.2	55.2	55.2	55.2	55.2	55.2	55.2	55.2
116	(2)(9)	−200	379	103	316	68.9	68.9	68.9	68.9	68.9	68.9	68.9	68.9	68.9
117	(2)(9)	−200	448	172	899	115	115	115	115	115	115	115	115	115
118	(2)(9)	−200	448	172	899	115	115	115	115	115	115	115	115	115
119	(2)(9)(74)	−200	450	170	899	115	115	115	115	115	115	115	115	115
120	(2)(9)(74)	−200	450	170	899	115	115	115	115	115	115	115	115	115
121	(2)(9)	−200	483	172	482	115	106	99.7	96.2	93.6	91.9	90.9	90.4	90.4
122	(2)(32)(74)	−200	483	172	482	115	106	99.7	96.2	93.6	91.9	90.9	90.4	90.4
123	(2)(32)(74)	−200	517	172	649	115	115	115	115	115	115	115	115	115
124	(2)(74)	−200	586	241	427	161	*161*	*161*	*161*	*161*	*161*	*161*	**157**	**154**
125	(2)	−200	586	241	427	161	*161*	*161*	*161*	*161*	*161*	*161*	**157**	**154**
126	(2)(74)	−200	517	207	816	138	138	138	138	138	138	138	138	138
127	(2)(9)	−200	517	207	816	138	138	138	138	138	138	138	138	138
128	(2)(74)	−200	552	241	427	161	161	161	161	161	161	161	161	161
129	(2)(9)	−200	552	241	427	161	161	161	161	161	161	161	161	161
130	(2)(9)	−200	552	241	649	161	161	161	161	161	161	161	161	161
131	(2)(9)(74)	−200	585	240	538	161	161	161	161	161	161	161	161	161
132	(2)(9)	−200	585	240	538	160	160	160	160	160	160	160	160	160
133	(2)(32)	−200	689	276	816	184	184	184	184	184	184	184	184	178
134	(2)(74)	−200	648	276	427	184	184	184	184	184	177	171	166	162
135	(2)	−200	648	276	427	184	184	184	184	184	177	171	166	162
136	(2)(74)	−200	689	283	677	188	188	188	188	188	188	188	188	187
137	(2)(9)	−200	689	283	677	188	188	188	188	188	188	188	188	187
138	(2)(32)	−200	689	310	427	207	207	207	207	207	207	207	207	207

Copyright © 2015 by the American Society of Mechanical Engineers.
No reproduction may be made of this material without written consent of ASME.

(14)

Table A-1M Basic Allowable Stresses in Tension for Metals (Metric) (Cont'd)

Numbers in Parentheses Refer to Notes for Appendix A Tables; Specifications Are ASTM Unless Otherwise Indicated

Line No.	Basic Allowable Stress, *S*, MPa, at Metal Temperature, °C [Notes (1) and (4b)]												
	275	300	325	350	375	400	425	450	475	500	525	550	575
114	55.2	...	...	...	...	...	...	...	...	...	...	...	...
115	55.2	...	...	...	...	...	...	...	...	...	...	...	...
116	68.9	68.9	68.9	...	...	...	...	...	...	...	...	...	...
117	115	115	113	110	108	105	104	102	100	98.6	97.1	95.9	91.8
118	115	115	113	110	108	105	104	102	100	98.7	97.1	96.1	94.1
119	115	115	113	110	108	105	104	102	100	98.6	97.1	95.9	91.8
120	115	115	113	110	108	105	104	102	100	98.7	97.1	96.1	94.1
121	90.4	90.4	90.4	90.4	89.8	89.0	88.0	**79.7**	**59.9**	**55.2**	...	...	...
122	90.4	90.4	90.4	90.4	89.8	89.0	88.0	**79.7**	**59.9**	**55.2**	...	...	...
123	115	115	115	115	115	115	115	115	115	**84.8**	**58.4**	**39.7**	**27.0**
124	**151**	**148**	**146**	**143**	**141**	**138**	**136**	**136**	...	...	...	...	...
125	**151**	**148**	**146**	**143**	**141**	**138**	**136**	**136**	...	...	...	...	...
126	138	138	138	138	138	138	138	138	138	138	138	136	**107**
127	138	138	138	138	138	138	138	138	138	138	138	136	**107**
128	161	161	161	161	161	160	157	156	...	...	...	...	...
129	161	161	161	161	161	160	157	156	...	...	...	...	...
130	161	161	161	161	161	161	161	161	161	**84.8**	**58.4**	**39.7**	**27.0**
131	161	161	161	161	161	160	159	158	157	156	155	153	...
132	160	160	160	160	160	159	158	157	156	156	154	151	...
133	173	169	165	162	160	158	157	155	154	**135**	**134**	**133**	**129**
134	158	155	152	149	146	144	141	141	...	...	...	...	...
135	158	155	152	149	146	144	141	141	...	...	...	...	...
136	182	177	172	168	165	162	159	157	156	155	154	**143**	**119**
137	182	177	172	168	165	162	159	157	156	155	154	**143**	**119**
138	207	207	207	207	207	207	206	206	...	...	...	...	...

Copyright © 2015 by the American Society of Mechanical Engineers.
No reproduction may be made of this material without written consent of ASME.

Table A-1M Basic Allowable Stresses in Tension for Metals (Metric) (Cont'd) (14)

Numbers in Parentheses Refer to Notes for Appendix A Tables; Specifications Are ASTM Unless Otherwise Indicated

Line No.	Basic Allowable Stress, *S*, MPa, at Metal Temperature, °C [Notes (1) and (4b)]												
	600	625	650	675	700	725	750	775	800	825	850	875	900
114	...	...	...	...	...	...	...	...	...	...	...	...	...
115	...	...	...	...	...	...	...	...	...	...	...	...	...
116	...	...	...	...	...	...	...	...	...	...	...	...	...
117	75.7	62.6	50.6	41.2	33.6	27.7	22.6	18.3	15.0	11.9	9.03	7.35	5.86
118	85.5	69.3	56.8	46.8	38.6	31.5	25.5	20.6	17.1	13.8	10.2	7.98	6.20
119	75.7	62.6	50.6	41.2	33.6	27.7	22.6	18.3	15.0	11.9	9.03	7.35	5.86
120	85.5	69.3	56.8	46.8	38.6	31.5	25.5	20.6	17.1	13.8	10.2	7.98	6.20
121	...	...	...	...	...	...	...	...	...	...	...	...	...
122	...	...	...	...	...	...	...	...	...	...	...	...	...
123	19.2	15.0	13.8	...	...	...	...	...	...	...	...	...	...
124	...	...	...	...	...	...	...	...	...	...	...	...	...
125	...	...	...	...	...	...	...	...	...	...	...	...	...
126	83.8	63.9	44.7	29.8	15.5	11.7	8.68	7.20	6.25	5.11	...	...	...
127	83.8	63.9	44.7	29.8	15.5	11.7	8.68	7.20	6.25	5.11	...	...	...
128	...	...	...	...	...	...	...	...	...	...	...	...	...
129	...	...	...	...	...	...	...	...	...	...	...	...	...
130	19.2	15.0	13.8	...	...	...	...	...	...	...	...	...	...
131	...	...	...	...	...	...	...	...	...	...	...	...	...
132	...	...	...	...	...	...	...	...	...	...	...	...	...
133	115	94.2	77.3	64.9	54.7	44.7	36.1	29.2	23.6	19.1	...	...	...
134	...	...	...	...	...	...	...	...	...	...	...	...	...
135	...	...	...	...	...	...	...	...	...	...	...	...	...
136	98.4	81.6	67.0	54.5	53.8	...	...	...	...	...	...	...	...
137	98.4	81.6	67.0	54.5	53.8	...	...	...	...	...	...	...	...
138	...	...	...	...	...	...	...	...	...	...	...	...	...

Copyright © 2015 by the American Society of Mechanical Engineers.
No reproduction may be made of this material without written consent of ASME.

(14)

Table A-1M Basic Allowable Stresses in Tension for Metals (Metric) (Cont'd)

Numbers in Parentheses Refer to Notes for Appendix A Tables; Specifications Are ASTM Unless Otherwise Indicated

Line No.	Nominal Composition	Product Form	Spec. No.	Type/ Grade	UNS No.	Class/Condition/Temper	Size, mm	P-No. (5)
139	Ni–Mo–Cr	Forg. & ftg.	B366	. . .	N06022	Sol. ann.	All	43
140	Ni–Cr–Mo	Forg. & ftg.	B564	. . .	N06022	. . .	. . .	43
141	Ni–Cr–Mo	Forg. & ftg.	B366	. . .	N06035	Sol. ann.	All	43
142	Ni–Cr–Mo	Forg. & ftg.	B462	. . .	N06035	Sol. ann.	All	43
143	Ni–Cr–Mo	Forg. & ftg.	B564	. . .	N06035	Sol. ann.	All	43
144	Low C–Ni–Cr–Mo	Forg. & ftg.	B366	. . .	N06059	Sol. ann.	All	43
145	Low C–Ni–Cr–Mo	Forg. & ftg.	B564	. . .	N06059	H.W. sol. ann.	All	43
146	Low C–Ni–Cr–Mo	Forg. & ftg.	B366	. . .	N06200	Sol. ann.	All	43
147	Low C–Ni–Cr–Mo	Forg. & ftg.	B462	. . .	N06200	Sol. ann.	All	43
148	Low C–Ni–Cr–Mo	Forg. & ftg.	B564	. . .	N06200	Sol. ann.	All	43
149	Ni–Cr–Mo–Cb	Forg. & ftg.	B564	. . .	N06625	Annealed	≤ 100	43
150	Ni–Mo	Forg. & ftg.	B366	. . .	N10665	Sol. ann.	All	44
151	Ni–Mo	Forg. & ftg.	B366	. . .	N10675	Sol. ann.	All	44
152	Ni–Mo	Forg. & ftg.	B462	. . .	N10675	Sol. ann.	All	44
153	Ni–Mo	Forg. & ftg.	B564	. . .	N10675	Sol. ann.	All	44
154	Ni–Cr–W–Mo	Forg. & ftg.	B564	. . .	N06230	Sol. ann.	All	43
155	Ni–Cr–W–Mo	Forg. & ftg.	B366	. . .	N06230	Sol. ann.	All	43
156	Ni	Rod & bar	B160	. . .	N02200	H.W.	All	41
157	Ni	Rod & bar	B160	. . .	N02200	Annealed	All	41
158	Ni–Cu	Rod & bar	B164	. . .	N04400	Ann. forg.	All	42
159	Ni–Fe–Cr	Rod & bar	B408	. . .	N08810	Sol. trt. or ann.	. . .	45
160	Ni–Fe–Cr	Rod & bar	B408	. . .	N08811	Annealed	. . .	45
161	Ni–Fe–Cr	Rod & bar	B408	. . .	N08800	Annealed	. . .	45
162	Ni–Fe–Cr–Mo	Rod & bar	B621	. . .	N08320	Sol. ann.	All	45
163	Ni–Cr–Fe–Mo–Cu	Rod & bar	B581	. . .	N06007	Sol. ann.	> 19	45
164	Ni–Fe–Cr–Mo–Cu	Rod & bar	B425	. . .	N08825	Annealed	. . .	45
165	Ni–Cr–Fe–Mo–Cu	Rod & bar	B581	. . .	N06007	Sol. ann.	≤ 19	45
166	Ni–Cr–Fe–Mo–W	Rod & bar	B581	. . .	N06030	Sol. ann.	All	45

Copyright © 2015 by the American Society of Mechanical Engineers.
No reproduction may be made of this material without written consent of ASME.

Table A-1M Basic Allowable Stresses in Tension for Metals (Metric) (Cont'd) (14)

Numbers in Parentheses Refer to Notes for Appendix A Tables; Specifications Are ASTM Unless Otherwise Indicated

						Basic Allowable Stress, *S*, MPa, at Metal Temperature, °C [Notes (1) and (4b)]								
Line No.	Notes	Min. Temp., °C (6)	Min. Tensile Str., MPa	Min. Yield Str., MPa	Max. Use Temp., °C	Min. Temp. to 40	65	100	125	150	175	200	225	250
139	(2)(32)(74)	−200	689	310	427	207	207	207	207	207	207	207	207	202
140	(2)	−200	689	310	427	207	207	207	207	207	207	207	207	202
141	(2)(32)(74)	−200	586	241	427	161	161	161	*161*	*161*	*161*	**154**	**149**	**144**
142	(2)(9)	−200	586	241	427	161	161	161	*161*	*161*	*161*	**154**	**149**	**144**
143	(2)(9)	−200	586	241	427	161	161	161	*161*	*161*	*161*	**154**	**149**	**144**
144	(2)(74)	−200	689	310	427	207	207	207	207	207	207	207	207	206
145	(2)	−200	689	310	427	207	207	207	207	207	207	207	207	206
146	(2)(74)	−200	689	310	427	207	207	207	207	207	207	207	**207**	**200**
147	(2)	−200	689	310	427	207	207	207	207	207	207	207	**207**	**200**
148	(2)	−200	689	310	427	207	207	207	207	207	207	207	**207**	**200**
149	(2)(9)(64)	−200	827	414	649	276	276	276	*274*	*273*	*272*	*270*	*269*	*267*
150	(2)(74)	−200	758	352	427	234	234	234	234	234	234	234	234	234
151	(2)(74)	−200	758	352	427	234	*234*	*234*	*234*	*234*	*234*	*234*	*234*	*234*
152	(2)	−200	758	352	427	234	*234*	*234*	*234*	*234*	*234*	*234*	*234*	*234*
153	(2)	−200	758	352	427	234	*234*	*234*	*234*	*234*	*234*	*234*	*234*	*234*
154	(2)	−200	758	310	899	207	*207*	*207*	*207*	*207*	*207*	*207*	*207*	*207*
155	(2)(74)	−200	758	310	899	207	*207*	*207*	*207*	*207*	*207*	*207*	*207*	*207*
156	(9)	−200	414	103	316	68.9	68.9	68.9	68.9	68.9	68.9	68.9	68.9	68.9
157	(9)	−200	379	103	316	68.9	68.9	68.9	68.9	68.9	68.9	68.9	68.9	68.9
158	(13)	−200	483	172	482	115	106	99.7	96.2	93.6	91.9	90.9	90.4	90.4
159	(9)	−200	450	170	899	115	115	115	115	115	115	115	115	115
160	(9)	−200	450	170	899	115	115	115	115	115	115	115	115	115
161	(9)	−200	515	205	816	138	138	138	138	138	138	138	138	138
162	. . .	−200	517	193	427	129	129	129	129	129	129	129	129	129
163	. . .	−200	586	207	538	138	138	138	138	138	138	138	138	138
164	(9)	−200	585	240	538	161	161	161	161	161	161	161	161	161
165	. . .	−200	621	241	538	161	161	161	161	161	161	161	161	161
166	. . .	−200	586	241	427	161	*161*	*161*	*161*	*161*	*161*	*161*	**157**	**154**

Copyright © 2015 by the American Society of Mechanical Engineers.
No reproduction may be made of this material without written consent of ASME.

(14)

Table A-1M Basic Allowable Stresses in Tension for Metals (Metric) (Cont'd)

Numbers in Parentheses Refer to Notes for Appendix A Tables; Specifications Are ASTM Unless Otherwise Indicated

Line No.	Basic Allowable Stress, *S*, MPa, at Metal Temperature, °C [Notes (1) and (4b)]												
	275	300	325	350	375	400	425	450	475	500	525	550	575
139	197	193	189	185	182	180	177	177	...	...	...	...	...
140	197	193	189	185	182	180	177	177	...	...	...	...	...
141	**140**	**137**	**135**	**133**	**132**	**131**	**129**	**128**	...	...	...	...	...
142	**140**	**137**	**135**	**133**	**132**	**131**	**129**	**128**	...	...	...	...	...
143	**140**	**137**	**135**	**133**	**132**	**131**	**129**	**128**	...	...	...	...	...
144	202	197	192	188	184	180	176	176	...	...	...	...	...
145	202	197	192	188	184	180	176	176	...	...	...	...	...
146	**194**	**188**	**184**	**180**	**177**	**175**	**174**	**173**	...	...	...	...	...
147	**194**	**188**	**184**	**180**	**177**	**175**	**174**	**173**	...	...	...	...	...
148	**194**	**188**	**184**	**180**	**177**	**175**	**174**	**173**	...	...	...	...	...
149	*265*	*262*	*260*	*257*	*255*	*252*	*251*	*249*	*247*	*245*	*242*	**215**	**194**
150	234	234	234	234	234	234	234	234	...	...	...	...	...
151	*234*	*234*	*234*	*234*	*234*	**233**	**231**	**230**	...	...	...	...	...
152	*234*	*234*	*234*	*234*	*234*	**233**	**231**	**230**	...	...	...	...	...
153	*234*	*234*	*234*	*234*	*234*	**233**	**231**	**230**	...	...	...	...	...
154	*207*	**207**	**203**	**199**	**197**	**196**	**195**	**195**	**195**	**195**	**195**	**195**	183
155	*207*	**207**	**203**	**199**	**197**	**196**	**195**	**195**	**195**	**195**	**195**	**195**	183
156	68.9	68.9	68.9	...	...	...	...	...	...	...	...	...	...
157	68.9	68.9	68.9	...	...	...	...	...	...	...	...	...	...
158	90.4	90.4	90.4	90.4	89.8	89.0	88.0	**79.7**	**59.9**	**55.2**	...	...	...
159	115	115	113	110	108	105	104	102	100	98.6	97.1	95.9	91.8
160	115	115	113	110	108	105	104	102	100	98.7	97.1	96.1	94.1
161	138	138	138	138	138	138	138	138	138	138	137	131	**108**
162	129	129	127	125	122	121	119	119	...	...	...	...	...
163	138	135	134	132	131	130	129	128	128	127	127	126	...
164	161	161	161	161	161	160	159	158	157	156	155	153	...
165	160	158	156	154	153	152	151	150	149	**136**	**132**	**130**	...
166	**151**	**148**	**146**	**143**	**141**	**138**	**136**	**136**	...	...	...	...	...

Copyright © 2015 by the American Society of Mechanical Engineers.
No reproduction may be made of this material without written consent of ASME.

Table A-1M Basic Allowable Stresses in Tension for Metals (Metric) (Cont'd) (14)

Numbers in Parentheses Refer to Notes for Appendix A Tables; Specifications Are ASTM Unless Otherwise Indicated

Line No.	Basic Allowable Stress, *S*, MPa, at Metal Temperature, °C [Notes (1) and (4b)]												
	600	625	650	675	700	725	750	775	800	825	850	875	900
139	...	...	...	...	...	...	...	...	...	...	...	...	...
140	...	...	...	...	...	...	...	...	...	...	...	...	...
141	...	...	...	...	...	...	...	...	...	...	...	...	...
142	...	...	...	...	...	...	...	...	...	...	...	...	...
143	...	...	...	...	...	...	...	...	...	...	...	...	...
144	...	...	...	...	...	...	...	...	...	...	...	...	...
145	...	...	...	...	...	...	...	...	...	...	...	...	...
146	...	...	...	...	...	...	...	...	...	...	...	...	...
147	...	...	...	...	...	...	...	...	...	...	...	...	...
148	...	...	...	...	...	...	...	...	...	...	...	...	...
149	**156**	**136**	**91.0**	...	...	...	...	...	...	...	...	...	...
150	...	...	...	...	...	...	...	...	...	...	...	...	...
151	...	...	...	...	...	...	...	...	...	...	...	...	...
152	...	...	...	...	...	...	...	...	...	...	...	...	...
153	...	...	...	...	...	...	...	...	...	...	...	...	...
154	153	128	107	89.7	74.7	61.9	50.8	41.1	32.6	25.2	18.9	13.8	10.2
155	153	128	107	89.7	74.7	61.9	50.8	41.1	32.6	25.2	18.9	13.8	10.2
156	...	...	...	...	...	...	...	...	...	...	...	...	...
157	...	...	...	...	...	...	...	...	...	...	...	...	...
158	...	...	...	...	...	...	...	...	...	...	...	...	...
159	**75.7**	**62.6**	**50.6**	**41.2**	**33.6**	**27.7**	**22.6**	**18.3**	**15.0**	**11.9**	**9.03**	**7.35**	**5.86**
160	**85.5**	**69.3**	**56.8**	**46.8**	**38.6**	**31.5**	**25.5**	**20.6**	**17.1**	**13.8**	**10.2**	**7.98**	**6.20**
161	**85.0**	**64.4**	**44.8**	**30.0**	**15.5**	**11.3**	**8.82**	**6.98**	**6.43**	**5.00**	...	...	...
162	...	...	...	...	...	...	...	...	...	...	...	...	...
163	...	...	...	...	...	...	...	...	...	...	...	...	...
164	...	...	...	...	...	...	...	...	...	...	...	...	...
165	...	...	...	...	...	...	...	...	...	...	...	...	...
166	...	...	...	...	...	...	...	...	...	...	...	...	...

Copyright © 2015 by the American Society of Mechanical Engineers.
No reproduction may be made of this material without written consent of ASME.

Table A-1M Basic Allowable Stresses in Tension for Metals (Metric) (Cont'd)

Numbers in Parentheses Refer to Notes for Appendix A Tables; Specifications Are ASTM Unless Otherwise Indicated

Line No.	Nominal Composition	Product Form	Spec. No.	Type/ Grade	UNS No.	Class/Condition/Temper	Size, mm	P-No. (5)
167	Low C–Ni–Fe–Cr–Mo–Cu	Rod & bar	B649	. . .	N08031	Annealed	All	45
168	Ni–Cu	Rod & bar	B164	. . .	N04400	H.W.	All except hex > 54	42
169	Ni–Cr–Mo	Rod & bar	B574	. . .	N06035	Sol. ann.	All	43
170	Ni–Mo–Cr	Rod & bar	B574	. . .	N06455	Sol. ann.	All	43
171	Ni–Mo–Cr	Rod & bar	B574	. . .	N10276	Sol. ann.	All	43
172	Ni–Cr–Mo–Cb	Rod & bar	B446	. . .	N06625	Annealed	> 100, ≤ 250	43
173	Ni–Cr–Mo–Cb	Rod & bar	B446	. . .	N06625	Annealed	≤ 100	43
174	Ni–Cr–W–Mo	Rod & bar	B572	. . .	N06230	Sol. ann.	All	43
175	Low C–Ni–Cr–Mo	Rod & bar	B574	. . .	N06059	Sol. ann.	All	43
176	Low C–Ni–Cr–Mo	Rod & bar	B574	. . .	N06200	Sol. ann.	All	43
177	Ni–Mo	Rod & bar	B335	. . .	N10675	Sol. ann.	All	44
178	Ni–Mo–Cr	Castings	A494	CW-12MW	. . .	. . .	. . .	. . .
179	Ni–Mo–Cr	Castings	A494	CW-6M	. . .	. . .	. . .	. . .
180	Ni–Cr–Mo	Castings	A494	CX-2MW	. . .	Sol. ann.	. . .	43

Copyright © 2015 by the American Society of Mechanical Engineers.
No reproduction may be made of this material without written consent of ASME.

Table A-1M Basic Allowable Stresses in Tension for Metals (Metric) (Cont'd) (14)

Numbers in Parentheses Refer to Notes for Appendix A Tables; Specifications Are ASTM Unless Otherwise Indicated

						Basic Allowable Stress, *S*, MPa, at Metal Temperature, °C [Notes (1) and (4b)]								
Line No.	Notes	Min. Temp., °C (6)	Min. Tensile Str., MPa	Min. Yield Str., MPa	Max. Use Temp., °C	Min. Temp. to 40	65	100	125	150	175	200	225	250
167	. . .	−200	648	276	427	184	184	184	184	184	177	171	166	162
168	. . .	−200	552	276	510	184	182	177	174	171	168	165	164	162
169	(9)	−200	586	241	427	161	161	161	*161*	*161*	*161*	**154**	**149**	**144**
170	(9)	−200	689	276	427	184	184	184	184	184	184	184	184	184
171	. . .	−200	689	283	677	188	188	188	188	188	188	188	188	187
172	(9)(64)(70)	−200	758	345	649	230	230	230	230	230	230	230	230	230
173	(9)(64)(70)	−200	827	414	649	276	276	276	*274*	*273*	*272*	*270*	*269*	*267*
174	. . .	−200	758	310	899	207	*207*	*207*	*207*	*207*	*207*	*207*	*207*	*207*
175	. . .	−200	689	310	427	207	207	207	207	207	207	207	207	206
176	. . .	−200	689	310	427	207	207	207	207	207	207	207	**207**	**200**
177	. . .	−200	758	352	427	234	*234*	*234*	*234*	*234*	*234*	*234*	*234*	*234*
178	(2)(9)(46)	−200	496	276	538	*165*	*165*	*165*	*165*	*165*	*165*	*165*	*165*	*165*
179	(2)(9)	−200	496	276	538	*165*	*165*	*165*	*165*	*165*	*165*	*165*	*165*	*165*
180	(2)(9)	−200	552	310	260	*184*	*184*	*184*	*184*	*184*	*184*	*184*	*184*	*184*

Copyright © 2015 by the American Society of Mechanical Engineers.
No reproduction may be made of this material without written consent of ASME.

(14)

Table A-1M Basic Allowable Stresses in Tension for Metals (Metric) (Cont'd)

Numbers in Parentheses Refer to Notes for Appendix A Tables; Specifications Are ASTM Unless Otherwise Indicated

	Basic Allowable Stress, *S*, MPa, at Metal Temperature, °C [Notes (1) and (4b)]												
Line No.	275	300	325	350	375	400	425	450	475	500	525	550	575
167	158	155	152	149	146	144	141	141	...	...	...	...	...
168	161	160	159	158	156	**136**	**102**	**63.8**	**33.5**	**17.0**	**13.0**	...	...
169	**140**	**137**	**135**	**133**	**132**	**131**	**129**	**128**	...	...	...	...	...
170	184	184	184	184	182	180	178	178	...	...	...	...	...
171	182	177	172	168	165	162	159	157	156	155	154	**143**	**119**
172	230	230	230	230	230	230	*230*	*228*	*227*	*225*	*222*	**215**	**194**
173	*265*	*262*	*260*	*257*	*255*	*252*	*251*	*249*	*247*	*245*	*242*	**215**	**194**
174	*207*	**207**	**203**	**199**	**197**	**196**	**195**	**195**	**195**	**195**	**195**	**195**	183
175	202	197	192	188	184	180	176	176	...	...	...	...	...
176	**194**	**188**	**184**	**180**	**177**	**175**	**174**	**173**	...	...	...	...	...
177	*234*	*234*	*234*	*234*	*234*	**233**	**231**	**230**	...	...	...	...	...
178	*165*	*165*	*165*	*165*	*165*	*165*	*165*	*165*	*165*	*165*	*165*	*157*	...
179	*165*	*165*	*165*	*165*	*165*	*165*	*165*	*165*	*165*	*165*	*165*	*157*	...
180	*184*	...	...	...	...	...	...	...	...	...	...	...	...

Copyright © 2015 by the American Society of Mechanical Engineers.
No reproduction may be made of this material without written consent of ASME.

Table A-1M Basic Allowable Stresses in Tension for Metals (Metric) (Cont'd) (14)

Numbers in Parentheses Refer to Notes for Appendix A Tables; Specifications Are ASTM Unless Otherwise Indicated

Line No.	Basic Allowable Stress, *S*, MPa, at Metal Temperature, °C [Notes (1) and (4b)]												
	600	625	650	675	700	725	750	775	800	825	850	875	900
167	...	...	...	...	...	...	...	...	...	...	...	...	...
168	...	...	...	...	...	...	...	...	...	...	...	...	...
169	...	...	...	...	...	...	...	...	...	...	...	...	...
170	...	...	...	...	...	...	...	...	...	...	...	...	...
171	**98.4**	**81.6**	**67.0**	**54.5**	**53.8**	...	...	...	...	...	...	...	...
172	**156**	**136**	**91.0**	...	...	...	...	...	...	...	...	...	...
173	**156**	**136**	**91.0**	...	...	...	...	...	...	...	...	...	...
174	153	128	107	89.7	74.7	61.9	50.8	41.1	32.6	25.2	18.9	13.8	10.2
175	...	...	...	...	...	...	...	...	...	...	...	...	...
176	...	...	...	...	...	...	...	...	...	...	...	...	...
177	...	...	...	...	...	...	...	...	...	...	...	...	...
178	...	...	...	...	...	...	...	...	...	...	...	...	...
179	...	...	...	...	...	...	...	...	...	...	...	...	...
180	...	...	...	...	...	...	...	...	...	...	...	...	...

Copyright © 2015 by the American Society of Mechanical Engineers.
No reproduction may be made of this material without written consent of ASME.

Table A-1M Basic Allowable Stresses in Tension for Metals (Metric) (Cont'd)

Numbers in Parentheses Refer to Notes for Appendix A Tables; Specifications Are ASTM Unless Otherwise Indicated

Line No.	Nominal Composition	Product Form	Spec. No.	Type/ Grade	UNS No.	P-No. (5)	Notes	Min. Temp., °C (6)	Min. Tensile Strength, MPa	Min. Yield Strength, MPa
1	Ti	Pipe & tube	B861	1	R50250	51	(2)	−60	241	138
2	Ti	Pipe & tube	B862	1	R50250	51	(2)	−60	241	138
3	Ti	Pipe & tube	B861	2	R50400	51	(2)	−60	345	276
4	Ti	Pipe & tube	B862	2	R50400	51	(2)	−60	345	276
5	Ti–0.2Pd	Pipe & tube	B861	7	R52400	51	(2)	−60	345	276
6	Ti–0.2Pd	Pipe & tube	B862	7	R52400	51	(2)	−60	345	276
7	Ti	Pipe & tube	B861	3	R50550	52	(2)	−60	448	379
8	Ti	Pipe & tube	B862	3	R50550	52	(2)	−60	448	379
9	Ti	Plate & sheet	B265	1	R50250	51	. . .	−60	241	172
10	Ti	Plate & sheet	B265	2	R50400	51	. . .	−60	345	276
11	Ti	Plate & sheet	B265	3	R50550	52	. . .	−60	448	379
12	Ti	Forgings	B381	F1	R50250	51	. . .	−60	241	172
13	Ti	Forgings	B381	F2	R50400	51	. . .	−60	345	276
14	Ti	Forgings	B381	F3	R50550	52	. . .	−60	448	379

Copyright © 2015 by the American Society of Mechanical Engineers.
No reproduction may be made of this material without written consent of ASME.

Table A-1M Basic Allowable Stresses in Tension for Metals (Metric) (Cont'd) (14)

Numbers in Parentheses Refer to Notes for Appendix A Tables; Specifications Are ASTM Unless Otherwise Indicated

		Basic Allowable Stress, *S*, MPa, at Metal Temperature, °C [Notes (1) and (4b)]											
Line No.	Max. Use Temp., °C	Min. Temp. to 40	65	100	125	150	175	200	225	250	275	300	325
1	316	*80.4*	*74.0*	*62.4*	*55.5*	*49.2*	*43.6*	*38.5*	*34.0*	*30.2*	*27.2*	*25.2*	*24.1*
2	316	*80.4*	*74.0*	*62.4*	*55.5*	*49.2*	*43.6*	*38.5*	*34.0*	*30.2*	*27.2*	*25.2*	*24.1*
3	316	*115*	*111*	*97.8*	*89.8*	*82.9*	*77.0*	*71.9*	*67.2*	*62.9*	*58.7*	*54.7*	*51.3*
4	316	*115*	*111*	*97.8*	*89.8*	*82.9*	*77.0*	*71.9*	*67.2*	*62.9*	*58.7*	*54.7*	*51.3*
5	316	*115*	*111*	*97.8*	*89.8*	*82.9*	*77.0*	*71.9*	*67.2*	*62.9*	*58.7*	*54.7*	*51.3*
6	316	*115*	*111*	*97.8*	*89.8*	*82.9*	*77.0*	*71.9*	*67.2*	*62.9*	*58.7*	*54.7*	*51.3*
7	316	*149*	*141*	*124*	*112*	*102*	*92.8*	*84.5*	*77.1*	*70.8*	*65.5*	*61.3*	*58.2*
8	316	*149*	*141*	*124*	*112*	*102*	*92.8*	*84.5*	*77.1*	*70.8*	*65.5*	*61.3*	*58.2*
9	316	*80.4*	*75.0*	*64.6*	*58.3*	*52.9*	*48.5*	*44.8*	*41.7*	*37.7*	*34.0*	*31.5*	*26.6*
10	316	*115*	*111*	*97.8*	*89.8*	*82.9*	*77.0*	*71.9*	*67.2*	*62.9*	*58.7*	*54.7*	*51.3*
11	316	*149*	*141*	*124*	*112*	*102*	*92.8*	*84.5*	*77.1*	*70.8*	*65.5*	*61.3*	*58.2*
12	316	*80.4*	*75.0*	*64.6*	*58.3*	*52.9*	*48.5*	*44.8*	*41.7*	*37.7*	*34.0*	*31.5*	*26.6*
13	316	*115*	*111*	*97.8*	*89.8*	*82.9*	*77.0*	*71.9*	*67.2*	*62.9*	*58.7*	*54.7*	*51.3*
14	316	*149*	*141*	*124*	*112*	*102*	*92.8*	*84.5*	*77.1*	*70.8*	*65.5*	*61.3*	*58.2*

Copyright © 2015 by the American Society of Mechanical Engineers.
No reproduction may be made of this material without written consent of ASME.

Table A-1M Basic Allowable Stresses in Tension for Metals (Metric) (Cont'd)

Numbers in Parentheses Refer to Notes for Appendix A Tables; Specifications Are ASTM Unless Otherwise Indicated

Line No.	Nominal Composition	Product Form	Spec. No.	UNS No.	P-No. (5)	Notes	Min. Temp., °C (6)	Min. Tensile Strength, MPa	Min. Yield Strength, MPa	Max. Use Temp., °C
1	Zr	Pipe & tube	B523	R60702	61	(2)	−60	379	207	371
2	Zr	Pipe & tube	B658	R60702	61	(2)	−60	379	207	371
3	Zr + Cb	Pipe & tube	B523	R60705	62	(2)(73)	−60	552	379	371
4	Zr + Cb	Pipe & tube	B658	R60705	62	(2)(73)	−60	552	379	371
5	Zr	Plate & sheet	B551	R60702	61	. . .	−60	379	207	371
6	Zr + Cb	Plate & sheet	B551	R60705	62	(73)	−60	552	379	371
7	Zr	Forgings & bar	B493	R60702	61	. . .	−60	379	207	371
8	Zr	Forgings & bar	B550	R60702	61	. . .	−60	379	207	371
9	Zr + Cb	Forgings & bar	B493	R60705	62	(73)	−60	483	379	371
10	Zr + Cb	Forgings & bar	B550	R60705	62	(73)	−60	552	379	371

Copyright © 2015 by the American Society of Mechanical Engineers.
No reproduction may be made of this material without written consent of ASME.

Table A-1M Basic Allowable Stresses in Tension for Metals (Metric) (Cont'd) (14)

Numbers in Parentheses Refer to Notes for Appendix A Tables; Specifications Are ASTM Unless Otherwise Indicated

	Basic Allowable Stress, *S*, MPa, at Metal Temperature, °C [Notes (1) and (4b)]													
Line No.	Min. Temp. to 40	65	100	125	150	175	200	225	250	275	300	325	350	375
1	*126*	119	103	92.4	82.5	73.6	65.7	58.8	52.8	47.8	43.7	40.4	37.8	36.1
2	*126*	119	103	92.4	82.5	73.6	65.7	58.8	52.8	47.8	43.7	40.4	37.8	36.1
3	*184*	*169*	*149*	*139*	*130*	*123*	*116*	*111*	*106*	*101*	*97.6*	*94.6*	*92.4*	*91.0*
4	*184*	*169*	*149*	*139*	*130*	*123*	*116*	*111*	*106*	*101*	*97.6*	*94.6*	*92.4*	*91.0*
5	*126*	119	103	92.4	82.5	73.6	65.7	58.8	52.8	47.8	43.7	40.4	37.8	36.1
6	*184*	*169*	*149*	*139*	*130*	*123*	*116*	*111*	*106*	*101*	*97.6*	*94.6*	*92.4*	*91.0*
7	*126*	119	103	92.4	82.5	73.6	65.7	58.8	52.8	47.8	43.7	40.4	37.8	36.1
8	*126*	119	103	92.4	82.5	73.6	65.7	58.8	52.8	47.8	43.7	40.4	37.8	36.1
9	*184*	*169*	*149*	*139*	*130*	*123*	*116*	*111*	*106*	*101*	*97.6*	*94.6*	*92.4*	*91.0*
10	*184*	*169*	*149*	*139*	*130*	*123*	*116*	*111*	*106*	*101*	*97.6*	*94.6*	*92.4*	*91.0*

Copyright © 2015 by the American Society of Mechanical Engineers.
No reproduction may be made of this material without written consent of ASME.

Table A-1M Basic Allowable Stresses in Tension for Metals (Metric) (Cont'd)

Numbers in Parentheses Refer to Notes for Appendix A Tables; Specifications Are ASTM Unless Otherwise Indicated

Line No.	Nominal Composition	Product Form	Spec. No.	Type/ Grade	UNS No.	Class/ Condition/ Temper	Size, mm	P-No. (5)
1	Aluminum alloy	Smls. pipe & tube	B210	1060	A91060	O	. . .	21
2	Aluminum alloy	Smls. pipe & tube	B210	1060	A91060	H112	. . .	21
3	Aluminum alloy	Smls. pipe & tube	B210	1060	A91060	H113	. . .	21
4	Aluminum alloy	Smls. pipe & tube	B241	1060	A91060	O	. . .	21
5	Aluminum alloy	Smls. pipe & tube	B241	1060	A91060	H112	. . .	21
6	Aluminum alloy	Smls. pipe & tube	B241	1060	A91060	H113	. . .	21
7	Aluminum alloy	Smls. pipe & tube	B345	1060	A91060	O	. . .	21
8	Aluminum alloy	Smls. pipe & tube	B345	1060	A91060	H112	. . .	21
9	Aluminum alloy	Smls. pipe & tube	B345	1060	A91060	H113	. . .	21
10	Aluminum alloy	Smls. pipe & tube	B210	1060	A91060	H14	. . .	21
11	Aluminum alloy	Smls. pipe & tube	B241	1100	A91100	O	. . .	21
12	Aluminum alloy	Smls. pipe & tube	B241	1100	A91100	H112	. . .	21
13	Aluminum alloy	Smls. pipe & tube	B210	1100	A91100	H113	. . .	21
14	Aluminum alloy	Smls. pipe & tube	B210	1100	A91100	H14	. . .	21
15	Aluminum alloy	Smls. pipe & tube	B210	3003	A93003	O	. . .	21
16	Aluminum alloy	Smls. pipe & tube	B210	3003	A93003	H112	. . .	21
17	Aluminum alloy	Smls. pipe & tube	B241	3003	A93003	O	. . .	21
18	Aluminum alloy	Smls. pipe & tube	B241	3003	A93003	H112	. . .	21
19	Aluminum alloy	Smls. pipe & tube	B345	3003	A93003	O	. . .	21
20	Aluminum alloy	Smls. pipe & tube	B345	3003	A93003	H112	. . .	21
21	Aluminum alloy	Smls. pipe & tube	B491	3003	A93003	O	. . .	21
22	Aluminum alloy	Smls. pipe & tube	B491	3003	A93003	H112	. . .	21
23	Aluminum alloy	Smls. pipe & tube	B210	3003	A93003	H14	. . .	21
24	Aluminum alloy	Smls. pipe & tube	B210	3003	A93003	H18	. . .	21
25	Aluminum alloy	Smls. pipe & tube	B241	3003	A93003	H18	. . .	21
26	Aluminum alloy	Smls. pipe & tube	B345	3003	A93003	H18	. . .	21

Copyright © 2015 by the American Society of Mechanical Engineers.
No reproduction may be made of this material without written consent of ASME.

Table A-1M Basic Allowable Stresses in Tension for Metals (Metric) (Cont'd) (14)

Numbers in Parentheses Refer to Notes for Appendix A Tables; Specifications Are ASTM Unless Otherwise Indicated

Line No.	Notes	Min. Temp., °C (6)	Min. Tensile Strength, MPa	Min. Yield Strength, MPa	Max. Use Temp., °C	Basic Allowable Stress, *S*, MPa, at Metal Temperature, °C [Notes (1) and (4b)] Min. Temp. to 40	65	100	125	150	175	200	225
1	(14)(33)	−270	59	17	204	11.5	11.5	10.9	9.8	8.8	**7.5**	**5.8**	**5.5**
2	(14)(33)	−270	59	17	204	11.5	11.5	10.9	9.8	8.8	**7.5**	**5.8**	**5.5**
3	(14)(33)	−270	59	17	204	11.5	11.5	10.9	9.8	8.8	**7.5**	**5.8**	**5.5**
4	(14)(33)	−270	59	17	204	11.5	11.5	10.9	9.8	8.8	**7.5**	**5.8**	**5.5**
5	(14)(33)	−270	59	17	204	11.5	11.5	10.9	9.8	8.8	**7.5**	**5.8**	**5.5**
6	(14)(33)	−270	59	17	204	11.5	11.5	10.9	9.8	8.8	**7.5**	**5.8**	**5.5**
7	(14)(33)	−270	59	17	204	11.5	11.5	10.9	9.8	8.8	**7.5**	**5.8**	**5.5**
8	(14)(33)	−270	59	17	204	11.5	11.5	10.9	9.8	8.8	**7.5**	**5.8**	**5.5**
9	(14)(33)	−270	59	17	204	11.5	11.5	10.9	9.8	8.8	**7.5**	**5.8**	**5.5**
10	(14)(33)	−270	83	69	204	*27.6*	*27.6*	*27.6*	*26.6*	**18.1**	**12.7**	**8.4**	**7.8**
11	(14)(33)	−270	76	21	204	13.8	13.8	13.7	13.2	**11.8**	**9.3**	**7.2**	**6.9**
12	(14)(33)	−270	76	21	204	13.8	13.8	13.7	13.2	**11.8**	**9.3**	**7.2**	**6.9**
13	(14)(33)	−270	76	24	204	16.1	16.1	16.0	15.6	**11.8**	**9.3**	**7.2**	**6.9**
14	(14)(33)	−270	110	97	204	*36.8*	*36.8*	*36.1*	*33.1*	**19.0**	**13.6**	**8.5**	**7.8**
15	(14)(33)	−270	97	34	204	23.0	22.1	21.4	20.5	**18.2**	**13.6**	**10.9**	**10.5**
16	(14)(33)	−270	97	34	204	23.0	22.1	21.4	20.5	**18.2**	**13.6**	**10.9**	**10.5**
17	(14)(33)	−270	97	34	204	23.0	22.1	21.4	20.5	**18.2**	**13.6**	**10.9**	**10.5**
18	(14)(33)	−270	97	34	204	23.0	22.1	21.4	20.5	**18.2**	**13.6**	**10.9**	**10.5**
19	(14)(33)	−270	97	34	204	23.0	22.1	21.4	20.5	**18.2**	**13.6**	**10.9**	**10.5**
20	(14)(33)	−270	97	34	204	23.0	22.1	21.4	20.5	**18.2**	**13.6**	**10.9**	**10.5**
21	(14)(33)	−270	97	34	204	23.0	22.1	21.4	20.5	**18.2**	**13.6**	**10.9**	**10.5**
22	(14)(33)	−270	97	34	204	23.0	22.1	21.4	20.5	**18.2**	**13.6**	**10.9**	**10.5**
23	(14)(33)	−270	138	117	204	*46.0*	*46.0*	*46.0*	*43.9*	**29.0**	**21.1**	**16.7**	**16.1**
24	(14)(33)	−270	186	165	204	*62.1*	*62.1*	*60.3*	**52.1**	**36.1**	**24.5**	**18.0**	**17.0**
25	(14)(33)	−270	186	165	204	*62.1*	*62.1*	*60.3*	**52.1**	**36.1**	**24.5**	**18.0**	**17.0**
26	(14)(33)	−270	186	165	204	*62.1*	*62.1*	*60.3*	**52.1**	**36.1**	**24.5**	**18.0**	**17.0**

Copyright © 2015 by the American Society of Mechanical Engineers.
No reproduction may be made of this material without written consent of ASME.

Table A-1M Basic Allowable Stresses in Tension for Metals (Metric) (Cont'd)

Numbers in Parentheses Refer to Notes for Appendix A Tables; Specifications Are ASTM Unless Otherwise Indicated

Line No.	Nominal Composition	Product Form	Spec. No.	Type/ Grade	UNS No.	Class/ Condition/ Temper	Size, mm	P-No. (5)
27	Aluminum alloy	Smls. pipe & tube	B210	Alclad 3003	A83003	O	. . .	21
28	Aluminum alloy	Smls. pipe & tube	B210	Alclad 3003	A83003	H112	. . .	21
29	Aluminum alloy	Smls. pipe & tube	B241	Alclad 3003	A83003	O	. . .	21
30	Aluminum alloy	Smls. pipe & tube	B241	Alclad 3003	A83003	H112	. . .	21
31	Aluminum alloy	Smls. pipe & tube	B345	Alclad 3003	A83003	O	. . .	21
32	Aluminum alloy	Smls. pipe & tube	B345	Alclad 3003	A83003	H112	. . .	21
33	Aluminum alloy	Smls. pipe & tube	B210	Alclad 3003	A83003	H14	. . .	21
34	Aluminum alloy	Smls. pipe & tube	B210	Alclad 3003	A83003	H18	. . .	21
35	Aluminum alloy	Smls. pipe & tube	B210	5052	A95052	O	. . .	22
36	Aluminum alloy	Smls. pipe & tube	B241	5052	A95052	O	. . .	22
37	Aluminum alloy	Smls. pipe & tube	B210	5052	A95052	H32	. . .	22
38	Aluminum alloy	Smls. pipe & tube	B210	5052	A95052	H34	. . .	22
39	Aluminum alloy	Smls. pipe & tube	B241	5083	A95083	O	. . .	25
40	Aluminum alloy	Smls. pipe & tube	B241	5083	A95083	H112	. . .	25
41	Aluminum alloy	Smls. pipe & tube	B210	5083	A95083	O	. . .	25
42	Aluminum alloy	Smls. pipe & tube	B210	5083	A95083	H112	. . .	25
43	Aluminum alloy	Smls. pipe & tube	B345	5083	A95083	O	. . .	25
44	Aluminum alloy	Smls. pipe & tube	B345	5083	A95083	H112	. . .	25
45	Aluminum alloy	Smls. pipe & tube	B241	5086	A95086	O	. . .	25
46	Aluminum alloy	Smls. pipe & tube	B241	5086	A95086	H112	. . .	25
47	Aluminum alloy	Smls. pipe & tube	B210	5086	A95086	O	. . .	25
48	Aluminum alloy	Smls. pipe & tube	B210	5086	A95086	H112	. . .	25
49	Aluminum alloy	Smls. pipe & tube	B345	5086	A95086	O	. . .	25
50	Aluminum alloy	Smls. pipe & tube	B345	5086	A95086	H112	. . .	25
51	Aluminum alloy	Smls. pipe & tube	B210	5086	A95086	H32	. . .	25
52	Aluminum alloy	Smls. pipe & tube	B210	5086	A95086	H34	. . .	25
53	Aluminum alloy	Smls. pipe & tube	B210	5154	A95154	0	. . .	22
54	Aluminum alloy	Smls. pipe & tube	B210	5154	A95154	H34	. . .	22
55	Aluminum alloy	Smls. pipe & tube	B241	5454	A95454	O	. . .	22
56	Aluminum alloy	Smls. pipe & tube	B241	5454	A95454	H112	. . .	22

Copyright © 2015 by the American Society of Mechanical Engineers.
No reproduction may be made of this material without written consent of ASME.

Table A-1M Basic Allowable Stresses in Tension for Metals (Metric) (Cont'd) (14)

Numbers in Parentheses Refer to Notes for Appendix A Tables; Specifications Are ASTM Unless Otherwise Indicated

Line No.	Notes	Min. Temp., °C (6)	Min. Tensile Strength, MPa	Min. Yield Strength, MPa	Max. Use Temp., °C	Basic Allowable Stress, *S*, MPa, at Metal Temperature, °C [Notes (1) and (4b)] Min. Temp. to 40	65	100	125	150	175	200	225
27	(14)(33)	−270	90	31	204	20.7	19.9	19.3	18.4	17.3	**13.6**	**10.9**	**10.5**
28	(14)(33)	−270	90	31	204	20.7	19.9	19.3	18.4	17.3	**13.6**	**10.9**	**10.5**
29	(14)(33)	−270	90	31	204	20.7	19.9	19.3	18.4	17.3	**13.6**	**10.9**	**10.5**
30	(14)(33)	−270	90	31	204	20.7	19.9	19.3	18.4	17.3	**13.6**	**10.9**	**10.5**
31	(14)(33)	−270	90	31	204	20.7	19.9	19.3	18.4	17.3	**13.6**	**10.9**	**10.5**
32	(14)(33)	−270	90	31	204	20.7	19.9	19.3	18.4	17.3	**13.6**	**10.9**	**10.5**
33	(14)(33)	−270	131	110	204	*43.7*	*43.7*	*43.7*	*41.7*	**29.0**	**21.1**	**16.7**	**16.1**
34	(14)(33)	−270	179	159	204	*59.8*	*59.8*	*59.8*	*57.0*	**29.0**	**21.1**	**16.7**	**16.1**
35	(14)	−270	172	69	204	46.0	46.0	46.0	45.9	**41.6**	**28.8**	**17.6**	**16.1**
36	(14)	−270	172	69	204	46.0	46.0	46.0	45.9	**41.6**	**28.8**	**17.6**	**16.1**
37	(14)(33)	−270	214	159	204	*71.2*	*71.2*	*71.2*	*71.0*	**41.6**	**28.8**	**17.6**	**16.1**
38	(14)(33)	−270	234	179	204	*78.1*	*78.1*	*78.1*	*78.1*	**41.6**	**28.8**	**17.6**	**16.1**
39	(33)	−270	269	110	65	73.5	73.5	...	...	...	...	...	...
40	(33)	−270	269	110	65	73.5	73.5	...	...	...	...	...	...
41	(33)	−270	269	110	65	73.5	73.5	...	...	...	...	...	...
42	(33)	−270	269	110	65	73.5	73.5	...	...	...	...	...	...
43	(33)	−270	269	110	65	73.5	73.5	...	...	...	...	...	...
44	(33)	−270	269	110	65	73.5	73.5	...	...	...	...	...	...
45	(33)	−270	241	97	65	64.4	64.4	...	...	...	...	...	...
46	(33)	−270	241	97	65	64.4	64.4	...	...	...	...	...	...
47	(33)	−270	241	97	65	64.4	64.4	...	...	...	...	...	...
48	(33)	−270	241	97	65	64.4	64.4	...	...	...	...	...	...
49	(33)	−270	241	97	65	64.4	64.4	...	...	...	...	...	...
50	(33)	−270	241	97	65	64.4	64.4	...	...	...	...	...	...
51	(33)	−270	276	193	65	*91.9*	*91.9*	...	...	...	...	...	...
52	(33)	−270	303	234	65	*101.1*	*101.1*	...	...	...	...	...	...
53	...	−270	207	76	65	50.6	50.6	...	...	...	...	...	...
54	(33)	−270	269	200	65	*89.6*	*89.6*	...	...	...	...	...	...
55	(33)	−270	214	83	204	55.2	55.2	55.2	**48.9**	**37.5**	**28.6**	**21.7**	**20.7**
56	(33)	−270	214	83	204	55.2	55.2	55.2	**48.9**	**37.5**	**28.6**	**21.7**	**20.7**

Copyright © 2015 by the American Society of Mechanical Engineers.
No reproduction may be made of this material without written consent of ASME.

Table A-1M Basic Allowable Stresses in Tension for Metals (Metric) (Cont'd)

Numbers in Parentheses Refer to Notes for Appendix A Tables; Specifications Are ASTM Unless Otherwise Indicated

Line No.	Nominal Composition	Product Form	Spec. No.	Type/ Grade	UNS No.	Class/ Condition/ Temper	Size, mm	P-No. (5)
57	Aluminum alloy	Smls. pipe & tube	B210	5456	A95456	O	. . .	25
58	Aluminum alloy	Smls. pipe & tube	B210	5456	A95456	H112	. . .	25
59	Aluminum alloy	Smls. pipe & tube	B241	5456	A95456	O	. . .	25
60	Aluminum alloy	Smls. pipe & tube	B241	5456	A95456	H112	. . .	25
61	Aluminum alloy	Smls. pipe & tube	B210	6061	A96061	T4	. . .	23
62	Aluminum alloy	Smls. pipe & tube	B241	6061	A96061	T4	. . .	23
63	Aluminum alloy	Smls. pipe & tube	B345	6061	A96061	T4	. . .	23
64	Aluminum alloy	Smls. pipe & tube	B210	6061	A96061	T6	. . .	23
65	Aluminum alloy	Smls. pipe & tube	B241	6061	A96061	T6	. . .	23
66	Aluminum alloy	Smls. pipe & tube	B345	6061	A96061	T6	. . .	23
67	Aluminum alloy	Smls. pipe & tube	B210	6061	A96061	T4 wld.	. . .	23
68	Aluminum alloy	Smls. pipe & tube	B210	6061	A96061	T6 wld.	. . .	23
69	Aluminum alloy	Smls. pipe & tube	B241	6061	A96061	T4 wld.	. . .	23
70	Aluminum alloy	Smls. pipe & tube	B241	6061	A96061	T6 wld.	. . .	23
71	Aluminum alloy	Smls. pipe & tube	B345	6061	A96061	T4 wld.	. . .	23
72	Aluminum alloy	Smls. pipe & tube	B345	6061	A96061	T6 wld.	. . .	23
73	Aluminum alloy	Smls. pipe & tube	B210	6063	A96063	T4	. . .	23
74	Aluminum alloy	Smls. pipe & tube	B241	6063	A96063	T4	≤ 13	23
75	Aluminum alloy	Smls. pipe & tube	B345	6063	A96063	T4	≤ 13	23
76	Aluminum alloy	Smls. pipe & tube	B241	6063	A96063	T5	≤ 13	23
77	Aluminum alloy	Smls. pipe & tube	B345	6063	A96063	T5	≤ 13	23
78	Aluminum alloy	Smls. pipe & tube	B210	6063	A96063	T6	. . .	23
79	Aluminum alloy	Smls. pipe & tube	B241	6063	A96063	T6	. . .	23
80	Aluminum alloy	Smls. pipe & tube	B345	6063	A96063	T6	. . .	23

Copyright © 2015 by the American Society of Mechanical Engineers.
No reproduction may be made of this material without written consent of ASME.

Table A-1M Basic Allowable Stresses in Tension for Metals (Metric) (Cont'd) (14)

Numbers in Parentheses Refer to Notes for Appendix A Tables; Specifications Are ASTM Unless Otherwise Indicated

Line No.	Notes	Min. Temp., °C (6)	Min. Tensile Strength, MPa	Min. Yield Strength, MPa	Max. Use Temp., °C	Basic Allowable Stress, *S*, MPa, at Metal Temperature, °C [Notes (1) and (4b)] Min. Temp. to 40	65	100	125	150	175	200	225
57	(33)	−270	283	131	65	87.3	87.3	. . .	. . .	. . .	. . .	. . .	. . .
58	(33)	−270	283	131	65	87.3	87.3	. . .	. . .	. . .	. . .	. . .	. . .
59	(33)	−270	283	131	65	87.3	87.3	. . .	. . .	. . .	. . .	. . .	. . .
60	(33)	−270	283	131	65	87.3	87.3	. . .	. . .	. . .	. . .	. . .	. . .
61	(33)	−270	207	110	204	*68.9*	*68.9*	*68.9*	*67.8*	*64.8*	*57.9*	**40.2**	**35.9**
62	(33)(63)	−270	179	110	204	*59.8*	*59.8*	*59.8*	*58.9*	*56.3*	*50.2*	*38.3*	*35.9*
63	(33)(63)	−270	179	110	204	*59.8*	*59.8*	*59.8*	*58.9*	*56.3*	*50.2*	*38.3*	*35.9*
64	(33)	−270	290	241	204	*96.5*	*96.5*	*96.5*	*92.5*	*79.9*	*63.1*	**40.2**	**35.9**
65	(33)(63)	−270	262	241	204	*87.3*	*87.3*	*87.3*	*83.6*	*72.3*	*57.2*	**40.2**	**35.9**
66	(33)(63)	−270	262	241	204	*87.3*	*87.3*	*87.3*	*83.6*	*72.3*	*57.2*	**40.2**	**35.9**
67	(22)(63)	−270	165	. . .	204	*55.2*	*55.2*	*55.2*	*54.3*	*52.0*	*46.3*	*35.3*	*34.8*
68	(22)(63)	−270	165	. . .	204	*55.2*	*55.2*	*55.2*	*54.3*	*52.0*	*46.3*	*35.3*	*34.8*
69	(22)(63)	−270	165	. . .	204	*55.2*	*55.2*	*55.2*	*54.3*	*52.0*	*46.3*	*35.3*	*34.8*
70	(22)(63)	−270	165	. . .	204	*55.2*	*55.2*	*55.2*	*54.3*	*52.0*	*46.3*	*35.3*	*34.8*
71	(22)(63)	−270	165	. . .	204	*55.2*	*55.2*	*55.2*	*54.3*	*52.0*	*46.3*	*35.3*	*34.8*
72	(22)(63)	−270	165	. . .	204	*55.2*	*55.2*	*55.2*	*54.3*	*52.0*	*46.3*	*35.3*	*34.8*
73	(33)	−270	152	69	204	46.0	45.8	45.8	45.5	45.5	*41.5*	*27.7*	*12.0*
74	(33)	−270	131	69	204	*43.7*	*43.7*	*43.7*	*43.7*	*43.7*	*35.8*	*23.9*	*10.3*
75	(33)	−270	131	69	204	*43.7*	*43.7*	*43.7*	*43.7*	*43.7*	*35.8*	*23.9*	*10.3*
76	(33)	−270	152	110	204	*50.6*	*50.6*	*48.7*	*46.6*	*41.4*	**27.5**	**15.3**	**13.8**
77	(33)	−270	152	110	204	*50.6*	*50.6*	*48.7*	*46.6*	*41.4*	**27.5**	**15.3**	**13.8**
78	(33)	−270	228	193	204	*75.8*	*75.8*	*74.8*	**64.0**	**49.2**	**27.5**	**15.3**	**13.8**
79	(33)	−270	207	172	204	*68.9*	*68.9*	*67.7*	*59.0*	*45.9*	**27.5**	**15.3**	**49.3**
80	(33)	−270	207	172	204	*68.9*	*68.9*	*67.7*	*59.0*	*45.9*	**27.5**	**15.3**	**49.3**

Copyright © 2015 by the American Society of Mechanical Engineers.
No reproduction may be made of this material without written consent of ASME.

Table A-1M Basic Allowable Stresses in Tension for Metals (Metric) (Cont'd)

Numbers in Parentheses Refer to Notes for Appendix A Tables; Specifications Are ASTM Unless Otherwise Indicated

Line No.	Nominal Composition	Product Form	Spec. No.	Type/ Grade	UNS No.	Class/ Condition/ Temper	Size, mm	P-No. (5)
81	Aluminum alloy	Smls. pipe & tube	B210	6063	A96063	T4 wld.	. . .	23
82	Aluminum alloy	Smls. pipe & tube	B210	6063	A96063	T5 wld.	. . .	23
83	Aluminum alloy	Smls. pipe & tube	B210	6063	A96063	T6 wld.	. . .	23
84	Aluminum alloy	Smls. pipe & tube	B241	6063	A96063	T4 wld.	. . .	23
85	Aluminum alloy	Smls. pipe & tube	B241	6063	A96063	T5 wld.	. . .	23
86	Aluminum alloy	Smls. pipe & tube	B241	6063	A96063	T6 wld.	. . .	23
87	Aluminum alloy	Smls. pipe & tube	B345	6063	A96063	T4 wld.	. . .	23
88	Aluminum alloy	Smls. pipe & tube	B345	6063	A96063	T5 wld.	. . .	23
89	Aluminum alloy	Smls. pipe & tube	B345	6063	A96063	T6 wld.	. . .	23
90	Aluminum alloy	Wld. pipe & tube	B547	5083	A95083	O	. . .	25
91	Aluminum alloy	Structural tube	B221	1060	A91060	O	. . .	21
92	Aluminum alloy	Structural tube	B221	1060	A91060	H112	. . .	21
93	Aluminum alloy	Structural tube	B221	1100	A91100	O	. . .	21
94	Aluminum alloy	Structural tube	B221	1100	A91100	H112	. . .	21
95	Aluminum alloy	Structural tube	B221	3003	A93003	O	. . .	21
96	Aluminum alloy	Structural tube	B221	3003	A93003	H112	. . .	21
97	Aluminum alloy	Structural tube	B221	Alclad 3003	A83003	O	. . .	21
98	Aluminum alloy	Structural tube	B221	Alclad 3003	A83003	H112	. . .	21
99	Aluminum alloy	Structural tube	B221	5052	A95052	O	. . .	22
100	Aluminum alloy	Structural tube	B221	5083	A95083	O	. . .	25
101	Aluminum alloy	Structural tube	B221	5086	A95086	O	. . .	25
102	Aluminum alloy	Structural tube	B221	5154	A95154	O	. . .	22
103	Aluminum alloy	Structural tube	B221	5454	A95454	O	. . .	22
104	Aluminum alloy	Structural tube	B221	5456	A95456	O	. . .	25
105	Aluminum alloy	Structural tube	B221	6061	A96061	T4	. . .	23
106	Aluminum alloy	Structural tube	B221	6061	A96061	T6	. . .	23
107	Aluminum alloy	Structural tube	B221	6061	A96061	T4 wld.	. . .	23
108	Aluminum alloy	Structural tube	B221	6061	A96061	T6 wld.	. . .	23

Copyright © 2015 by the American Society of Mechanical Engineers.
No reproduction may be made of this material without written consent of ASME.

Table A-1M Basic Allowable Stresses in Tension for Metals (Metric) (Cont'd) (14)

Numbers in Parentheses Refer to Notes for Appendix A Tables; Specifications Are ASTM Unless Otherwise Indicated

Line No.	Notes	Min. Temp., °C (6)	Min. Tensile Strength, MPa	Min. Yield Strength, MPa	Max. Use Temp., °C	Basic Allowable Stress, *S*, MPa, at Metal Temperature, °C [Notes (1) and (4b)] Min. Temp. to 40	65	100	125	150	175	200	225
81	. . .	−270	117	. . .	204	*39.1*	*39.1*	*37.9*	*35.9*	*32.1*	*25.7*	*17.6*	*13.8*
82	. . .	−270	117	. . .	204	*39.1*	*39.1*	*37.9*	*35.9*	*32.1*	*25.7*	*17.6*	*13.8*
83	. . .	−270	117	. . .	204	*39.1*	*39.1*	*37.9*	*35.9*	*32.1*	*25.7*	*17.6*	*13.8*
84	. . .	−270	117	. . .	204	*39.1*	*39.1*	*37.9*	*35.9*	*32.1*	*25.7*	*17.6*	*13.8*
85	. . .	−270	117	. . .	204	*39.1*	*39.1*	*37.9*	*35.9*	*32.1*	*25.7*	*17.6*	*13.8*
86	. . .	−270	117	. . .	204	*39.1*	*39.1*	*37.9*	*35.9*	*32.1*	*25.7*	*17.6*	*13.8*
87	. . .	−270	117	. . .	204	*39.1*	*39.1*	*37.9*	*35.9*	*32.1*	*25.7*	*17.6*	*13.8*
88	. . .	−270	117	. . .	204	*39.1*	*39.1*	*37.9*	*35.9*	*32.1*	*25.7*	*17.6*	*13.8*
89	. . .	−270	117	. . .	204	*39.1*	*39.1*	*37.9*	*35.9*	*32.1*	*25.7*	*17.6*	*13.8*
90	. . .	−270	276	124	65	*82.7*	*82.7*	. . .	. . .	. . .	. . .	. . .	. . .
91	(33)(69)	−270	59	17	204	11.5	11.5	10.9	9.8	8.8	**7.5**	**5.8**	**5.5**
92	(33)(69)	−270	59	17	204	11.5	11.5	10.9	9.8	8.8	**7.5**	**5.8**	**5.5**
93	(33)(69)	−270	76	21	204	13.8	13.8	13.7	13.2	**11.8**	**9.3**	**7.2**	**6.9**
94	(33)(69)	−270	76	21	204	13.8	13.8	13.7	13.2	**11.8**	**9.3**	**7.2**	**6.9**
95	(33)(69)	−270	97	34	204	23.0	22.1	21.4	20.5	**18.2**	**13.6**	**10.9**	**10.5**
96	(33)(69)	−270	97	34	204	23.0	22.1	21.4	20.5	**18.2**	**13.6**	**10.9**	**10.5**
97	(33)(69)	−270	90	31	204	20.7	19.9	19.3	18.4	17.3	**13.6**	**10.9**	**10.5**
98	(33)(69)	−270	90	31	204	20.7	19.9	19.3	18.4	17.3	**13.6**	**10.9**	**10.5**
99	(69)	−270	172	69	204	46.0	46.0	46.0	45.9	**41.6**	**28.8**	**17.6**	**16.1**
100	(69)	−270	269	110	65	73.5	73.5	. . .	. . .	. . .	. . .	. . .	. . .
101	(69)	−270	241	97	65	64.4	64.4	. . .	. . .	. . .	. . .	. . .	. . .
102	(69)	−270	207	76	65	50.6	50.6	. . .	. . .	. . .	. . .	. . .	. . .
103	(69)	−270	214	83	204	55.2	55.2	55.2	**48.9**	**37.5**	**28.6**	**21.7**	**20.7**
104	(69)	−270	283	131	65	87.3	87.3	. . .	. . .	. . .	. . .	. . .	. . .
105	(33)(63)(69)	−270	179	110	204	*59.8*	*59.8*	*59.8*	*58.9*	*56.3*	*50.2*	*38.3*	*35.9*
106	(33)(63)(69)	−270	262	241	204	*87.3*	*87.3*	*87.3*	*83.6*	*72.3*	*57.2*	**40.2**	**35.9**
107	(22)(63)(69)	−270	165	. . .	204	*55.2*	*55.2*	*55.2*	*54.3*	*52.0*	*46.3*	*35.3*	*34.8*
108	(22)(63)(69)	−270	165	. . .	204	*55.2*	*55.2*	*55.2*	*54.3*	*52.0*	*46.3*	*35.3*	*34.8*

Copyright © 2015 by the American Society of Mechanical Engineers.
No reproduction may be made of this material without written consent of ASME.

Table A-1M Basic Allowable Stresses in Tension for Metals (Metric) (Cont'd)

Numbers in Parentheses Refer to Notes for Appendix A Tables; Specifications Are ASTM Unless Otherwise Indicated

Line No.	Nominal Composition	Product Form	Spec. No.	Type/ Grade	UNS No.	Class/ Condition/ Temper	Size, mm	P-No. (5)
109	Aluminum alloy	Structural tube	B221	6063	A96063	T4	≤ 13	23
110	Aluminum alloy	Structural tube	B221	6063	A96063	T5	≤ 13	23
111	Aluminum alloy	Structural tube	B221	6063	A96063	T6	. . .	23
112	Aluminum alloy	Structural tube	B221	6063	A96063	T4 wld.	. . .	23
113	Aluminum alloy	Structural tube	B221	6063	A96063	T5 wld.	. . .	23
114	Aluminum alloy	Structural tube	B221	6063	A96063	T6 wld.	. . .	23
115	Aluminum alloy	Plate & sheet	B209	1060	A91060	O	. . .	21
116	Aluminum alloy	Plate & sheet	B209	1060	A91060	H112	≥ 13, ≤ 25	21
117	Aluminum alloy	Plate & sheet	B209	1060	A91060	H12	. . .	21
118	Aluminum alloy	Plate & sheet	B209	1060	A91060	H14	. . .	21
119	Aluminum alloy	Plate & sheet	B209	1100	A91100	O	. . .	21
120	Aluminum alloy	Plate & sheet	B209	1100	A91100	H112	≥ 13, ≤ 50	21
121	Aluminum alloy	Plate & sheet	B209	1100	A91100	H12	. . .	21
122	Aluminum alloy	Plate & sheet	B209	1100	A91100	H14	. . .	21
123	Aluminum alloy	Plate & sheet	B209	3003	A93003	O	. . .	21
124	Aluminum alloy	Plate & sheet	B209	3003	A93003	H112	≥ 13, ≤ 50	21
125	Aluminum alloy	Plate & sheet	B209	3003	A93003	H12	. . .	21
126	Aluminum alloy	Plate & sheet	B209	3003	A93003	H14	. . .	21
127	Aluminum alloy	Plate & sheet	B209	Alclad 3003	A83003	O	≥ 0.15, < 13	21
128	Aluminum alloy	Plate & sheet	B209	Alclad 3003	A83003	O	≥ 13, ≤ 75	21
129	Aluminum alloy	Plate & sheet	B209	Alclad 3003	A83003	H112	≥ 13, ≤ 50	21
130	Aluminum alloy	Plate & sheet	B209	Alclad 3003	A83003	H12	≥ 0.43, < 13	21
131	Aluminum alloy	Plate & sheet	B209	Alclad 3003	A83003	H12	≥ 13, ≤ 50	21
132	Aluminum alloy	Plate & sheet	B209	Alclad 3003	A83003	H14	≥ 0.23, < 13	21
133	Aluminum alloy	Plate & sheet	B209	Alclad 3003	A83003	H14	≥ 13, ≤ 25	21
134	Aluminum alloy	Plate & sheet	B209	3004	A93004	O	. . .	22
135	Aluminum alloy	Plate & sheet	B209	3004	A93004	H112	. . .	22
136	Aluminum alloy	Plate & sheet	B209	3004	A93004	H32	. . .	22
137	Aluminum alloy	Plate & sheet	B209	3004	A93004	H34	. . .	22

Copyright © 2015 by the American Society of Mechanical Engineers.
No reproduction may be made of this material without written consent of ASME.

Table A-1M Basic Allowable Stresses in Tension for Metals (Metric) (Cont'd) (14)

Numbers in Parentheses Refer to Notes for Appendix A Tables; Specifications Are ASTM Unless Otherwise Indicated

Line No.	Notes	Min. Temp., °C (6)	Min. Tensile Strength, MPa	Min. Yield Strength, MPa	Max. Use Temp., °C	Basic Allowable Stress, *S*, MPa, at Metal Temperature, °C [Notes (1) and (4b)] Min. Temp. to 40	65	100	125	150	175	200	225
109	(13)(33)(69)	−270	131	69	204	*43.7*	*43.7*	*43.7*	*43.7*	*43.7*	*35.8*	*23.9*	*10.3*
110	(13)(33)(69)	−270	152	110	204	*50.6*	*50.6*	*48.7*	*46.6*	*41.4*	**27.5**	**15.3**	**13.8**
111	(33)(69)	−270	207	172	204	*68.9*	*68.9*	*67.7*	*59.0*	*45.9*	**27.5**	**15.3**	**49.3**
112	(69)	−270	117	. . .	204	*39.1*	*39.1*	*37.9*	*35.9*	*32.1*	*25.7*	*17.6*	*13.8*
113	(69)	−270	117	. . .	204	*39.1*	*39.1*	*37.9*	*35.9*	*32.1*	*25.7*	*17.6*	*13.8*
114	(69)	−270	117	. . .	204	*39.1*	*39.1*	*37.9*	*35.9*	*32.1*	*25.7*	*17.6*	*13.8*
115	. . .	−270	55	17	204	11.5	11.5	10.9	9.8	8.8	**7.5**	**5.8**	**5.5**
116	(13)(33)	−270	69	34	204	*23.0*	*21.8*	*19.1*	*17.0*	*15.0*	**11.8**	**7.5**	**5.9**
117	(33)	−270	76	62	204	*25.3*	*25.3*	*23.1*	*21.0*	**18.1**	**12.7**	**8.4**	**7.8**
118	(33)	−270	83	69	204	*27.6*	*27.6*	*27.6*	*26.6*	**18.1**	**12.7**	**8.4**	**7.8**
119	. . .	−270	76	24	204	16.1	16.1	16.0	15.6	**11.8**	**9.3**	**7.2**	**6.9**
120	(13)(33)	−270	83	34	204	23.0	23.0	22.7	**21.6**	**16.3**	**11.8**	**7.5**	**6.9**
121	(33)	−270	97	76	204	*32.2*	*32.2*	*31.3*	**25.2**	**19.0**	**13.6**	**8.5**	**7.8**
122	(33)	−270	110	97	204	*36.8*	*36.8*	*36.1*	*33.1*	**19.0**	**13.6**	**8.5**	**7.8**
123	. . .	−270	97	34	204	23.0	22.1	21.4	20.5	**18.2**	**13.6**	**10.9**	**10.5**
124	(13)(33)	−270	103	41	204	27.6	26.6	25.6	24.4	**18.2**	**13.6**	**10.9**	**10.5**
125	(33)	−270	117	83	204	*39.1*	*39.1*	*38.1*	*35.8*	**29.0**	**21.1**	**16.7**	**16.1**
126	(33)	−270	138	117	204	*46.0*	*46.0*	*46.0*	*43.9*	**29.0**	**21.1**	**16.7**	**16.1**
127	(66)	−270	90	31	204	20.7	19.9	19.3	18.4	17.3	**13.6**	**10.9**	**10.5**
128	(68)	−270	97	34	204	23.0	22.2	21.3	20.4	***18.2***	**13.6**	**10.9**	**10.5**
129	(33)(66)	−270	103	41	204	27.6	26.6	25.6	24.4	***18.2***	**13.6**	**10.9**	**10.5**
130	(33)(66)	−270	110	76	204	*36.8*	*36.8*	*35.9*	*33.7*	***29.0***	**21.1**	**16.7**	**16.1**
131	(33)(68)	−270	117	83	204	*39.1*	*39.1*	*39.1*	*39.1*	***29.0***	**21.1**	**16.7**	**16.1**
132	(33)(66)	−270	131	110	204	*43.7*	*43.7*	*43.7*	*41.7*	***29.0***	**21.1**	**16.7**	**16.1**
133	(33)(68)	−270	138	117	204	*46.0*	*46.0*	*46.0*	*43.9*	***29.0***	**21.1**	**16.7**	**16.1**
134	. . .	−270	152	59	204	39.1	39.1	39.1	39.0	***38.9***	**26.9**	**17.4**	**16.1**
135	(33)	−270	159	62	204	41.4	41.4	41.4	41.4	***38.9***	**26.9**	**17.4**	**16.1**
136	(33)	−270	193	145	204	*64.4*	*64.4*	*64.4*	**60.4**	**38.9**	**26.9**	**17.4**	**16.1**
137	(33)	−270	221	172	204	*73.5*	*73.5*	*73.5*	*73.5*	**38.9**	**26.9**	**17.4**	**16.1**

Copyright © 2015 by the American Society of Mechanical Engineers.
No reproduction may be made of this material without written consent of ASME.

Table A-1M Basic Allowable Stresses in Tension for Metals (Metric) (Cont'd)

Numbers in Parentheses Refer to Notes for Appendix A Tables; Specifications Are ASTM Unless Otherwise Indicated

Line No.	Nominal Composition	Product Form	Spec. No.	Type/ Grade	UNS No.	Class/ Condition/ Temper	Size, mm	P-No. (5)
138	Aluminum alloy	Plate & sheet	B209	Alclad 3004	A83004	O	≥ 0.15, < 13	22
139	Aluminum alloy	Plate & sheet	B209	Alclad 3004	A83004	O	≥ 13, ≤ 75	22
140	Aluminum alloy	Plate & sheet	B209	Alclad 3004	A83004	H112	≥ 6, < 13	22
141	Aluminum alloy	Plate & sheet	B209	Alclad 3004	A83004	H112	≥ 13, ≤ 75	22
142	Aluminum alloy	Plate & sheet	B209	Alclad 3004	A83004	H32	≥ 0.43, < 13	22
143	Aluminum alloy	Plate & sheet	B209	Alclad 3004	A83004	H32	≥ 13, ≤ 50	22
144	Aluminum alloy	Plate & sheet	B209	Alclad 3004	A83004	H34	≥ 0.23, < 13	22
145	Aluminum alloy	Plate & sheet	B209	Alclad 3004	A83004	H34	≥ 13, ≤ 25	22
146	Aluminum alloy	Plate & sheet	B209	5050	A95050	O	. . .	21
147	Aluminum alloy	Plate & sheet	B209	5050	A95050	H112	. . .	21
148	Aluminum alloy	Plate & sheet	B209	5050	A95050	H32	. . .	21
149	Aluminum alloy	Plate & sheet	B209	5050	A95050	H34	. . .	21
150	Aluminum alloy	Plate & sheet	B209	5052	A95052	O	. . .	22
151	Aluminum alloy	Plate & sheet	B209	5652	A95652	O	. . .	22
152	Aluminum alloy	Plate & sheet	B209	5052	A95052	H112	≥ 13, ≤ 75	22
153	Aluminum alloy	Plate & sheet	B209	5652	A95652	H112	≥ 13, ≤ 75	22
154	Aluminum alloy	Plate & sheet	B209	5052	A95052	H32	. . .	22
155	Aluminum alloy	Plate & sheet	B209	5652	A95652	H32	. . .	22
156	Aluminum alloy	Plate & sheet	B209	5052	A95052	H34	. . .	22
157	Aluminum alloy	Plate & sheet	B209	5652	A95652	H34	. . .	22
158	Aluminum alloy	Plate & sheet	B209	5083	A95083	O	≥ 1.3, ≤ 38	25
159	Aluminum alloy	Plate & sheet	B209	5083	A95083	H32	≥ 5, ≤ 38	25
160	Aluminum alloy	Plate & sheet	B209	5086	A95086	O	. . .	25
161	Aluminum alloy	Plate & sheet	B209	5086	A95086	H112	≥ 13, ≤ 25	25
162	Aluminum alloy	Plate & sheet	B209	5086	A95086	H32	. . .	25
163	Aluminum alloy	Plate & sheet	B209	5086	A95086	H34	. . .	25

Copyright © 2015 by the American Society of Mechanical Engineers.
No reproduction may be made of this material without written consent of ASME.

Table A-1M Basic Allowable Stresses in Tension for Metals (Metric) (Cont'd) (14)

Numbers in Parentheses Refer to Notes for Appendix A Tables; Specifications Are ASTM Unless Otherwise Indicated

Line No.	Notes	Min. Temp., °C (6)	Min. Tensile Strength, MPa	Min. Yield Strength, MPa	Max. Use Temp., °C	Basic Allowable Stress, *S*, MPa, at Metal Temperature, °C [Notes (1) and (4b)] Min. Temp. to 40	65	100	125	150	175	200	225
138	(66)	−270	145	55	204	36.8	36.8	36.8	36.8	36.8	**26.9**	**17.4**	**16.1**
139	(68)	−270	152	59	204	39.1	39.1	39.1	39.1	**38.9**	**26.9**	**17.4**	**16.1**
140	(33)(66)	−270	152	59	204	39.1	39.1	39.1	39.1	**38.9**	**26.9**	**17.4**	**16.1**
141	(33)(68)	−270	159	62	204	41.4	41.4	41.4	41.4	**38.9**	**26.9**	**17.4**	**16.1**
142	(33)(66)	−270	186	138	204	*62.1*	*62.1*	*62.1*	**60.4**	**38.9**	**26.9**	**17.4**	**16.1**
143	(33)(68)	−270	193	145	204	*64.4*	*64.4*	*64.4*	**60.4**	**38.9**	**26.9**	**17.4**	**16.1**
144	(33)(66)	−270	214	165	204	*71.2*	*71.2*	*71.2*	*71.2*	**38.9**	**26.9**	**17.4**	**16.1**
145	(33)(68)	−270	221	172	204	*73.5*	*73.5*	*73.5*	*73.5*	**38.9**	**26.9**	**17.4**	**16.1**
146	. . .	−270	124	41	204	27.6	27.6	27.5	27.5	27.5	**20.1**	**10.8**	**9.7**
147	(33)	−270	138	55	204	36.8	36.7	36.7	36.6	**35.8**	**20.1**	**10.8**	**9.7**
148	(33)	−270	152	110	204	*50.6*	*50.6*	*50.6*	*50.6*	**35.8**	**20.1**	**10.8**	**9.7**
149	(33)	−270	172	138	204	*57.5*	*57.5*	*57.5*	*57.5*	**35.8**	**20.1**	**10.8**	**9.7**
150	. . .	−270	172	65	204	43.7	43.7	43.7	43.6	**41.6**	**28.8**	**17.6**	**16.1**
151	. . .	−270	172	65	204	43.7	43.7	43.7	43.6	**41.6**	**28.8**	**17.6**	**16.1**
152	(13)(33)	−270	172	65	204	43.7	43.7	43.7	43.6	**41.6**	**28.8**	**17.6**	**16.1**
153	(13)(33)	−270	172	65	204	43.7	43.7	43.7	43.6	**41.6**	**28.8**	**17.6**	**16.1**
154	(33)	−270	214	159	204	*71.2*	*71.2*	*71.2*	*71.0*	**41.6**	**28.8**	**17.6**	**16.1**
155	(33)	−270	214	159	204	*71.2*	*71.2*	*71.2*	*71.0*	**41.6**	**28.8**	**17.6**	**16.1**
156	(33)	−270	234	179	204	*78.1*	*78.1*	*78.1*	*78.1*	**41.6**	**28.8**	**17.6**	**16.1**
157	(33)	−270	234	179	204	*78.1*	*78.1*	*78.1*	*78.1*	**41.6**	**28.8**	**17.6**	**16.1**
158	(13)	−270	276	124	65	82.7	82.7	. . .	. . .	. . .	. . .	. . .	. . .
159	(13)(33)	−270	303	214	65	*101.1*	*101.1*	. . .	. . .	. . .	. . .	. . .	. . .
160	. . .	−270	241	97	65	64.4	64.4	. . .	. . .	. . .	. . .	. . .	. . .
161	(13)(33)	−270	241	110	65	73.5	73.5	. . .	. . .	. . .	. . .	. . .	. . .
162	(33)	−270	276	193	65	*91.9*	*91.9*	. . .	. . .	. . .	. . .	. . .	. . .
163	(33)	−270	303	234	65	*101.1*	*101.1*	. . .	. . .	. . .	. . .	. . .	. . .

Copyright © 2015 by the American Society of Mechanical Engineers.
No reproduction may be made of this material without written consent of ASME.

Table A-1M Basic Allowable Stresses in Tension for Metals (Metric) (Cont'd)

Numbers in Parentheses Refer to Notes for Appendix A Tables; Specifications Are ASTM Unless Otherwise Indicated

Line No.	Nominal Composition	Product Form	Spec. No.	Type/ Grade	UNS No.	Class/ Condition/ Temper	Size, mm	P-No. (5)
164	Aluminum alloy	Plate & sheet	B209	5154	A95154	O	. . .	22
165	Aluminum alloy	Plate & sheet	B209	5254	A95254	O	. . .	22
166	Aluminum alloy	Plate & sheet	B209	5154	A95154	H112	≥ 13, ≤ 75	22
167	Aluminum alloy	Plate & sheet	B209	5254	A95254	H112	≥ 13, ≤ 75	22
168	Aluminum alloy	Plate & sheet	B209	5154	A95154	H32	. . .	22
169	Aluminum alloy	Plate & sheet	B209	5254	A95254	H32	. . .	22
170	Aluminum alloy	Plate & sheet	B209	5154	A95154	H34	. . .	22
171	Aluminum alloy	Plate & sheet	B209	5254	A95254	H34	. . .	22
172	Aluminum alloy	Plate & sheet	B209	5454	A95454	O	. . .	22
173	Aluminum alloy	Plate & sheet	B209	5454	A95454	H112	≥ 13, ≤ 75	22
174	Aluminum alloy	Plate & sheet	B209	5454	A95454	H32	. . .	22
175	Aluminum alloy	Plate & sheet	B209	5454	A95454	H34	. . .	22
176	Aluminum alloy	Plate & sheet	B209	5456	A95456	O	≥ 1.3, ≤ 38	25
177	Aluminum alloy	Plate & sheet	B209	5456	A95456	H32	≥ 5, < 13	25
178	Aluminum alloy	Plate & sheet	B209	6061	A96061	T4	. . .	23
179	Aluminum alloy	Plate & sheet	B209	6061	A96061	T6	. . .	23
180	Aluminum alloy	Plate & sheet	B209	6061	A96061	T651	≥ 6, ≤ 100	23
181	Aluminum alloy	Plate & sheet	B209	6061	A96061	T4 wld.	. . .	23
182	Aluminum alloy	Plate & sheet	B209	6061	A96061	T6 wld.	. . .	23
183	Aluminum alloy	Plate & sheet	B209	Alclad 6061	A86061	T4	. . .	23
184	Aluminum alloy	Plate & sheet	B209	Alclad 6061	A86061	T451	≥ 6, < 13	23
185	Aluminum alloy	Plate & sheet	B209	Alclad 6061	A86061	T451	≥ 13, ≤ 75	23
186	Aluminum alloy	Plate & sheet	B209	Alclad 6061	A86061	T6	. . .	23
187	Aluminum alloy	Plate & sheet	B209	Alclad 6061	A86061	T651	≥ 6, < 13	23
188	Aluminum alloy	Plate & sheet	B209	Alclad 6061	A86061	T651	≥ 13, ≤ 100	23
189	Aluminum alloy	Plate & sheet	B209	Alclad 6061	A86061	T4 wld.	. . .	23
190	Aluminum alloy	Plate & sheet	B209	Alclad 6061	A86061	T6 wld.	. . .	23

Copyright © 2015 by the American Society of Mechanical Engineers.
No reproduction may be made of this material without written consent of ASME.

Table A-1M Basic Allowable Stresses in Tension for Metals (Metric) (Cont'd) (14)

Numbers in Parentheses Refer to Notes for Appendix A Tables; Specifications Are ASTM Unless Otherwise Indicated

Line No.	Notes	Min. Temp., °C (6)	Min. Tensile Strength, MPa	Min. Yield Strength, MPa	Max. Use Temp., °C	Basic Allowable Stress, *S*, MPa, at Metal Temperature, °C [Notes (1) and (4b)] Min. Temp. to 40	65	100	125	150	175	200	225
164	. . .	−270	207	76	65	50.6	50.4	. . .	. . .	. . .	. . .	. . .	. . .
165	. . .	−270	207	76	65	50.6	50.4	. . .	. . .	. . .	. . .	. . .	. . .
166	(13)(33)	−270	207	76	65	50.6	50.4	. . .	. . .	. . .	. . .	. . .	. . .
167	(13)(33)	−270	207	76	65	50.6	50.4	. . .	. . .	. . .	. . .	. . .	. . .
168	(33)	−270	248	179	65	*82.7*	*82.7*	. . .	. . .	. . .	. . .	. . .	. . .
169	(33)	−270	248	179	65	*82.7*	*82.7*	. . .	. . .	. . .	. . .	. . .	. . .
170	(33)	−270	269	200	65	*89.6*	*89.6*	. . .	. . .	. . .	. . .	. . .	. . .
171	(33)	−270	269	200	65	*89.6*	*89.6*	. . .	. . .	. . .	. . .	. . .	. . .
172	. . .	−270	214	83	204	55.2	55.2	55.2	**48.9**	**37.5**	**28.6**	**21.7**	**20.7**
173	(13)(33)	−270	214	83	204	55.2	55.2	55.2	**48.9**	**37.5**	**28.6**	**21.7**	**20.7**
174	(33)	−270	248	179	204	*82.7*	*82.7*	*82.7*	**49.5**	**37.5**	**28.6**	**21.7**	**20.7**
175	(33)	−270	269	200	204	*89.6*	*89.6*	*89.6*	**49.5**	**37.5**	**28.6**	**21.7**	**20.7**
176	(13)	−270	290	131	65	87.3	87.3	. . .	. . .	. . .	. . .	. . .	. . .
177	(13)(33)	−270	317	228	65	*105.7*	*105.7*	. . .	. . .	. . .	. . .	. . .	. . .
178	(33)(63)	−270	207	110	204	*68.9*	*68.9*	*68.9*	*67.8*	*64.8*	*57.9*	**40.2**	**35.9**
179	(33)	−270	290	241	204	*96.5*	*96.5*	*96.5*	*92.5*	*79.9*	*63.1*	**40.2**	**35.9**
180	(13)(33)	−270	290	241	204	*96.5*	*96.5*	*96.5*	*92.5*	*79.9*	*63.1*	**40.2**	**35.9**
181	(22)(63)	−270	165	. . .	204	*55.2*	*55.2*	*55.2*	*54.3*	*52.0*	*46.3*	*35.3*	*34.8*
182	(22)(63)	−270	165	. . .	204	*55.2*	*55.2*	*55.2*	*54.3*	*52.0*	*46.3*	*35.3*	*34.8*
183	(33)(66)	−270	186	97	204	*62.1*	*62.1*	*62.1*	*61.0*	*58.3*	*52.1*	*39.7*	*35.9*
184	(33)(66)	−270	186	97	204	*62.1*	*62.1*	*62.1*	*61.0*	*58.3*	*52.1*	*39.7*	*35.9*
185	(33)(68)	−270	207	110	204	*68.9*	*68.9*	*68.9*	*67.8*	*64.8*	*57.9*	**40.2**	**35.9**
186	(33)(66)	−270	262	221	204	*87.3*	*87.3*	*87.3*	*83.8*	*72.3*	*57.2*	**40.2**	**35.9**
187	(33)(66)	−270	262	221	204	*87.3*	*87.3*	*87.3*	*83.8*	*72.3*	*57.2*	**40.2**	**35.9**
188	(33)(68)	−270	290	241	204	*96.5*	*96.5*	*96.5*	*92.5*	*79.9*	*63.1*	**40.2**	**35.9**
189	(22)(63)	−270	165	. . .	204	*55.2*	*55.2*	*55.2*	*54.3*	*52.0*	*46.3*	*35.3*	*34.8*
190	(22)(63)	−270	165	. . .	204	*55.2*	*55.2*	*55.2*	*54.3*	*52.0*	*46.3*	*35.3*	*34.8*

Copyright © 2015 by the American Society of Mechanical Engineers.
No reproduction may be made of this material without written consent of ASME.

(14)

Table A-1M Basic Allowable Stresses in Tension for Metals (Metric) (Cont'd)

Numbers in Parentheses Refer to Notes for Appendix A Tables; Specifications Are ASTM Unless Otherwise Indicated

Line No.	Nominal Composition	Product Form	Spec. No.	Type/ Grade	UNS No.	Class/ Condition/ Temper	Size, mm	P-No. (5)
191	Aluminum alloy	Forgings & fittings	B247	3003	A93003	H112	. . .	21
192	Aluminum alloy	Forgings & fittings	B247	3003	A93003	H112 wld.	. . .	21
193	Aluminum alloy	Forgings & fittings	B247	5083	A95083	O	. . .	25
194	Aluminum alloy	Forgings & fittings	B247	5083	A95083	H112	. . .	25
195	Aluminum alloy	Forgings & fittings	B247	5083	A95083	H112 wld.	. . .	25
196	Aluminum alloy	Forgings & fittings	B247	6061	A96061	T6	. . .	23
197	Aluminum alloy	Forgings & fittings	B247	6061	A96061	T6 wld.	. . .	23
198	Aluminum alloy	Forgings & fittings	B361	WP1060	A91060	O	. . .	21
199	Aluminum alloy	Forgings & fittings	B361	WP1060	A91060	H112	. . .	21
200	Aluminum alloy	Forgings & fittings	B361	WP1100	A91100	O	. . .	21
201	Aluminum alloy	Forgings & fittings	B361	WP1100	A91100	H112	. . .	21
202	Aluminum alloy	Forgings & fittings	B361	WP3003	A93003	O	. . .	21
203	Aluminum alloy	Forgings & fittings	B361	WP3003	A93003	H112	. . .	21
204	Aluminum alloy	Forgings & fittings	B361	WP Alclad 3003	A83003	O	. . .	21
205	Aluminum alloy	Forgings & fittings	B361	WP Alclad 3003	A83003	H112	. . .	21
206	Aluminum alloy	Forgings & fittings	B361	WP5083	A95083	O	. . .	25
207	Aluminum alloy	Forgings & fittings	B361	WP5083	A95083	H112	. . .	25
208	Aluminum alloy	Forgings & fittings	B361	WP5154	A95154	O	. . .	22
209	Aluminum alloy	Forgings & fittings	B361	WP5154	A95154	H112	. . .	22
210	Aluminum alloy	Forgings & fittings	B361	WP6061	A96061	T4	. . .	23

Copyright © 2015 by the American Society of Mechanical Engineers.
No reproduction may be made of this material without written consent of ASME.

Table A-1M Basic Allowable Stresses in Tension for Metals (Metric) (Cont'd) (14)

Numbers in Parentheses Refer to Notes for Appendix A Tables; Specifications Are ASTM Unless Otherwise Indicated

Line No.	Notes	Min. Temp., °C (6)	Min. Tensile Strength, MPa	Min. Yield Strength, MPa	Max. Use Temp., °C	Basic Allowable Stress, *S*, MPa, at Metal Temperature, °C [Notes (1) and (4b)] Min. Temp. to 40	65	100	125	150	175	200	225
191	(2)(9)(45)	−270	97	34	204	23.0	22.1	21.4	20.5	**18.2**	**13.6**	**10.9**	**10.5**
192	(2)(9)(45)	−270	97	34	204	23.0	22.1	21.4	20.5	**18.2**	**13.6**	**10.9**	**10.5**
193	(2)(9)(32)(33)	−270	268	110	65	73.5	73.5	. . .	. . .	. . .	. . .	. . .	. . .
194	(2)(9)(32)(33)	−270	268	110	65	73.5	73.5	. . .	. . .	. . .	. . .	. . .	. . .
195	(2)(9)(32)(33)	−270	268	110	65	73.5	73.5	. . .	. . .	. . .	. . .	. . .	. . .
196	(2)(9)(33)	−270	262	241	204	*87.3*	*87.3*	*87.3*	*83.6*	*72.3*	*57.2*	**40.2**	**35.9**
197	(2)(9)(22)	−270	165	. . .	204	*55.2*	*55.2*	*55.2*	*54.3*	*52.0*	*46.3*	*35.3*	*34.8*
198	(2)(13)(14)(32)(33)	−270	55	17	204	11.5	11.5	10.9	9.8	8.8	**7.5**	**5.8**	**5.5**
199	(2)(13)(14)(32)(33)	−270	55	17	204	11.5	11.5	10.9	9.8	8.8	**7.5**	**5.8**	**5.5**
200	(2)(13)(14)(32)(33)	−270	76	21	204	13.8	13.8	13.7	13.2	**11.8**	**9.3**	**7.2**	**6.9**
201	(2)(13)(14)(32)(33)	−270	76	21	204	13.8	13.8	13.7	13.2	**11.8**	**9.3**	**7.2**	**6.9**
202	(2)(13)(14)(32)(33)	−270	97	34	204	23.0	22.1	21.4	20.5	**18.2**	**13.6**	**10.9**	**10.5**
203	(2)(13)(14)(32)(33)	−270	97	34	204	23.0	22.1	21.4	20.5	**18.2**	**13.6**	**10.9**	**10.5**
204	(2)(13)(14)(32)(33)(66)	−270	90	31	204	20.7	19.9	19.3	18.4	17.3	**13.6**	**10.9**	**10.5**
205	(2)(13)(14)(32)(33)(66)	−270	90	31	204	20.7	19.9	19.3	18.4	17.3	**13.6**	**10.9**	**10.5**
206	(2)(13)(32)(33)	−270	269	110	65	73.5	73.5	. . .	. . .	. . .	. . .	. . .	. . .
207	(2)(13)(32)(33)	−270	269	110	65	73.5	73.5	. . .	. . .	. . .	. . .	. . .	. . .
208	(2)(32)(33)	−270	207	76	65	50.6	50.6	. . .	. . .	. . .	. . .	. . .	. . .
209	(2)(32)(33)	−270	207	76	65	50.6	50.6	. . .	. . .	. . .	. . .	. . .	. . .
210	(2)(13)(32)(33)(63)	−270	179	110	204	*59.8*	*59.8*	*59.8*	*58.9*	*56.3*	*50.2*	*38.3*	*35.9*

Copyright © 2015 by the American Society of Mechanical Engineers.
No reproduction may be made of this material without written consent of ASME.

(14)

Table A-1M Basic Allowable Stresses in Tension for Metals (Metric) (Cont'd)

Numbers in Parentheses Refer to Notes for Appendix A Tables; Specifications Are ASTM Unless Otherwise Indicated

Line No.	Nominal Composition	Product Form	Spec. No.	Type/ Grade	UNS No.	Class/ Condition/ Temper	Size, mm	P-No. (5)
211	Aluminum alloy	Forgings & fittings	B361	WP6061	A96061	T6	. . .	23
212	Aluminum alloy	Forgings & fittings	B361	WP6061	A96061	T4 wld.	. . .	23
213	Aluminum alloy	Forgings & fittings	B361	WP6061	A96061	T6 wld.	. . .	23
214	Aluminum alloy	Forgings & fittings	B361	WP6063	A96063	T4	. . .	23
215	Aluminum alloy	Forgings & fittings	B361	WP6063	A96063	T6	. . .	23
216	Aluminum alloy	Forgings & fittings	B361	WP6063	A96063	T4 wld.	. . .	23
217	Aluminum alloy	Forgings & fittings	B361	WP6063	A96063	T6 wld.	. . .	23
218	Aluminum alloy	Castings	B26	443.0	A04430	F	. . .	. . .
219	Aluminum alloy	Castings	B26	356.0	A03560	T6	. . .	. . .
220	Aluminum alloy	Castings	B26	356.0	A03560	T71	. . .	. . .

Copyright © 2015 by the American Society of Mechanical Engineers.
No reproduction may be made of this material without written consent of ASME.

(14)

Table A-1M Basic Allowable Stresses in Tension for Metals (Metric) (Cont'd)

Numbers in Parentheses Refer to Notes for Appendix A Tables; Specifications Are ASTM Unless Otherwise Indicated

Line No.	Notes	Min. Temp., °C (6)	Min. Tensile Strength, MPa	Min. Yield Strength, MPa	Max. Use Temp., °C	Basic Allowable Stress, *S*, MPa, at Metal Temperature, °C [Notes (1) and (4b)]							
						Min. Temp. to 40	65	100	125	150	175	200	225
211	(2)(13)(32)(33)(63)	−270	262	241	204	*87.3*	*87.3*	*87.3*	*83.6*	*72.3*	*57.2*	**40.2**	**35.9**
212	(2)(22)(32)(63)	−270	165	. . .	204	*55.2*	*55.2*	*55.2*	*54.3*	*52.0*	*46.3*	*35.3*	*34.8*
213	(2)(22)(32)(63)	−270	165	. . .	204	*55.2*	*55.2*	*55.2*	*54.3*	*52.0*	*46.3*	*35.3*	*34.8*
214	(2)(13)(32)(33)	−270	124	62	204	*41.4*	41.3	*41.3*	41.0	*41.0*	*33.9*	*22.6*	*9.8*
215	(2)(13)(32)(33)	−270	207	172	204	*68.9*	*68.9*	*67.7*	*59.0*	*45.9*	**27.5**	**15.3**	**13.8**
216	(2)(32)	−270	117	. . .	204	*39.1*	*39.1*	*37.6*	*36.0*	*32.0*	*24.7*	**15.3**	**13.8**
217	(2)(32)	−270	117	. . .	204	*39.1*	*39.1*	*37.6*	*36.0*	*32.0*	*24.7*	**15.3**	**13.8**
218	(2)(9)(43)	−270	117	48	204	32.0	32.0	32.0	32.0	32.0	32.0	32.0	24.1
219	(2)(9)(43)	−270	207	138	121	*68.9*	*68.9*	*68.9*	*57.9*	. . .	. . .	. . .	. . .
220	(2)(9)(43)	−270	172	124	204	*57.5*	*57.5*	*57.5*	**55.0**	**49.8**	**38.6**	**18.9**	**16.5**

Copyright © 2015 by the American Society of Mechanical Engineers.
No reproduction may be made of this material without written consent of ASME.

Table A-1A Basic Casting Quality Factors, E_c

These quality factors are determined in accordance with para. 302.3.3(b). See also para. 302.3.3(c) and Table 302.3.3C for increased quality factors applicable in special cases. Specifications are ASTM.

Spec. No.	Description	E_c [Note (2)]	Appendix A Notes
Iron			
A47	Malleable iron castings	1.00	(9)
A48	Gray iron castings	1.00	(9)
A126	Gray iron castings	1.00	(9)
A197	Cupola malleable iron castings	1.00	(9)
A278	Gray iron castings	1.00	(9)
A395	Ductile and ferritic ductile iron castings	0.80	(9), (40)
A571	Austenitic ductile iron castings	0.80	(9), (40)
Carbon Steel			
A216	Carbon steel castings	0.80	(9), (40)
A352	Ferritic steel castings	0.80	(9), (40)
Low and Intermediate Alloy Steel			
A217	Martensitic stainless and alloy castings	0.80	(9), (40)
A352	Ferritic steel castings	0.80	(9), (40)
A426	Centrifugally cast pipe	1.00	(10)
Stainless Steel			
A351	Austenitic steel castings	0.80	(9), (40)
A451	Centrifugally cast pipe	0.90	(10), (40)
A487	Steel castings	0.80	(9), (40)
Copper and Copper Alloy			
B61	Steam bronze castings	0.80	(9), (40)
B62	Composition bronze castings	0.80	(9), (40)
B148	Al–bronze and Si–Al–bronze castings	0.80	(9), (40)
B584	Copper alloy castings	0.80	(9), (40)
Nickel and Nickel Alloy			
A494	Nickel and nickel alloy castings	0.80	(9), (40)
Aluminum Alloy			
B26, Temper F	Aluminum alloy castings	1.00	(9), (10)
B26, Temper T6, T71	Aluminum alloy castings	0.80	(9), (40)

Copyright © 2015 by the American Society of Mechanical Engineers.
No reproduction may be made of this material without written consent of ASME.

Table A-1B Basic Quality Factors for Longitudinal Weld Joints in Pipes, Tubes, and Fittings, E_j

These quality factors are determined in accordance with para. 302.3.4(a). See also para. 302.3.4(b) and Table 302.3.4 for increased quality factors applicable in special cases. Specifications, except API, are ASTM.

Spec. No.	Class (or Type)	Description	E_j [Note (2)]	Appendix A Notes
Carbon Steel				
API 5L	. . .	Seamless pipe	1.00	. . .
		Electric fusion welded pipe, 100% radiographed	1.00	. . .
		Electric resistance welded pipe	0.85	. . .
		Electric fusion welded pipe, double butt, straight or spiral (helical) seam	0.95	. . .
		Furnace butt welded	0.60	. . .
A53	Type S	Seamless pipe	1.00	. . .
	Type E	Electric resistance welded pipe	0.85	. . .
	Type F	Furnace butt welded pipe	0.60	. . .
A105	. . .	Forgings and fittings	1.00	(9)
A106	. . .	Seamless pipe	1.00	. . .
A134	. . .	Electric fusion welded pipe, single butt, straight or spiral (helical) seam	0.80	. . .
A135	. . .	Electric resistance welded pipe	0.85	. . .
A139	. . .	Electric fusion welded pipe, straight or spiral (helical) seam	0.80	. . .
A179	. . .	Seamless tube	1.00	. . .
A181	. . .	Forgings and fittings	1.00	(9)
A234	. . .	Seamless and welded fittings	1.00	(16)
A333	. . .	Seamless pipe	1.00	. . .
		Electric resistance welded pipe	0.85	. . .
A334	. . .	Seamless tube	1.00	. . .
A350	. . .	Forgings and fittings	1.00	(9)
A369	. . .	Seamless pipe	1.00	. . .
A381	. . .	Electric fusion welded pipe, 100% radiographed	1.00	. . .
		Electric fusion welded pipe, spot radiographed	0.90	(19)
		Electric fusion welded pipe, as manufactured	0.85	. . .
A420	. . .	Welded fittings, 100% radiographed	1.00	(16)
A524	. . .	Seamless pipe	1.00	. . .
A587	. . .	Electric resistance welded pipe	0.85	. . .
A671	12, 22, 32, 42, 52	Electric fusion welded pipe, 100% radiographed	1.00	. . .
	13, 23, 33, 43, 53	Electric fusion welded pipe, double butt seam	0.85	. . .
A672	12, 22, 32, 42, 52	Electric fusion welded pipe, 100% radiographed	1.00	. . .
	13, 23, 33, 43, 53	Electric fusion welded pipe, double butt seam	0.85	. . .
A691	12, 22, 32, 42, 52	Electric fusion welded pipe, 100% radiographed	1.00	. . .
	13, 23, 33, 43, 53	Electric fusion welded pipe, double butt seam	0.85	. . .
Low and Intermediate Alloy Steel				
A182	. . .	Forgings and fittings	1.00	(9)
A234	. . .	Seamless and welded fittings	1.00	(16)
A333	. . .	Seamless pipe	1.00	. . .
		Electric resistance welded pipe	0.85	(78)
A334	. . .	Seamless tube	1.00	. . .
A335	. . .	Seamless pipe	1.00	. . .
A350	. . .	Forgings and fittings	1.00	. . .
A369	. . .	Seamless pipe	1.00	. . .
A420	. . .	Welded fittings, 100% radiographed	1.00	(16)
A671	12, 22, 32, 42, 52	Electric fusion welded pipe, 100% radiographed	1.00	. . .
	13, 23, 33, 43, 53	Electric fusion welded pipe, double butt seam	0.85	(78)
A672	12, 22, 32, 42, 52	Electric fusion welded pipe, 100% radiographed	1.00	. . .
	13, 23, 33, 43, 53	Electric fusion welded pipe, double butt seam	0.85	(78)
A691	12, 22, 32, 42, 52	Electric fusion welded pipe, 100% radiographed	1.00	. . .
	13, 23, 33, 43, 53	Electric fusion welded pipe, double butt seam	0.85	(78)

Copyright © 2015 by the American Society of Mechanical Engineers.
No reproduction may be made of this material without written consent of ASME.

(14) **Table A-1B Basic Quality Factors for Longitudinal Weld Joints in Pipes, Tubes, and Fittings, E_j (Cont'd)**

These quality factors are determined in accordance with para. 302.3.4(a). See also para. 302.3.4(b) and Table 302.3.4 for increased quality factors applicable in special cases. Specifications, except API, are ASTM.

Spec. No.	Class (or Type)	Description	E_j [Note (2)]	Appendix A Notes
Stainless Steel				
A182	. . .	Forgings and fittings	1.00	. . .
A249	. . .	Electric fusion welded tube, single butt seam	0.80	. . .
A268	. . .	Seamless tube	1.00	. . .
		Electric fusion welded tube, double butt seam	0.85	. . .
		Electric fusion welded tube, single butt seam	0.80	. . .
A269	. . .	Seamless tube	1.00	. . .
		Electric fusion welded tube, double butt seam	0.85	. . .
		Electric fusion welded tube, single butt seam	0.80	. . .
A312	. . .	Seamless tube	1.00	. . .
		Electric fusion welded tube, double butt seam	0.85	. . .
		Electric fusion welded tube, single butt seam	0.80	. . .
		Electric fusion welded, 100% radiographed	1.00	(46)
A358	1, 3, 4	Electric fusion welded pipe, 100% radiographed	1.00	. . .
	5	Electric fusion welded pipe, spot radiographed	0.90	. . .
	2	Electric fusion welded pipe, double butt seam	0.85	. . .
A376	. . .	Seamless pipe	1.00	. . .
A403	. . .	Seamless fittings	1.00	. . .
		Welded fitting, 100% radiographed	1.00	(16)
		Welded fitting, double butt seam	0.85	. . .
		Welded fitting, single butt seam	0.80	. . .
A409	. . .	Electric fusion welded pipe, double butt seam	0.85	. . .
		Electric fusion welded pipe, single butt seam	0.80	. . .
A487	. . .	Steel castings	0.80	(9)(40)
A789	. . .	Seamless tube	1.00	. . .
		Electric fusion welded, 100% radiographed	1.00	. . .
		Electric fusion welded, double butt	0.85	. . .
		Electric fusion welded, single butt	0.80	. . .
A790	. . .	Seamless pipe	1.00	. . .
		Electric fusion welded, 100% radiographed	1.00	. . .
		Electric fusion welded, double butt	0.85	. . .
		Electric fusion welded, single butt	0.80	. . .
A813	DW	Electric fusion welded, double butt	0.85	. . .
	SW	Electric fusion welded, single butt	0.80	. . .
A814	DW	Electric fusion welded, double butt	0.85	. . .
	SW	Electric fusion welded, single butt	0.80	. . .
A815	. . .	Seamless fittings	1.00	. . .
		Welded fittings, 100% radiographed	1.00	(16)
		Welded fittings, double butt seam	0.85	. . .
		Welded fittings, single butt seam	0.80	. . .
Copper and Copper Alloy				
B42	. . .	Seamless pipe	1.00	. . .
B43	. . .	Seamless pipe	1.00	. . .
B68	. . .	Seamless tube	1.00	. . .
B75	. . .	Seamless tube	1.00	. . .
B88	. . .	Seamless water tube	1.00	. . .
B280	. . .	Seamless tube	1.00	. . .
B466	. . .	Seamless pipe and tube	1.00	. . .
B467	. . .	Electric resistance welded pipe	0.85	. . .
		Electric fusion welded pipe, double butt seam	0.85	. . .
		Electric fusion welded pipe, single butt seam	0.80	. . .

Copyright © 2015 by the American Society of Mechanical Engineers.
No reproduction may be made of this material without written consent of ASME.

Table A-1B Basic Quality Factors for Longitudinal Weld Joints in Pipes, Tubes, and Fittings, E_j (Cont'd) (14)

These quality factors are determined in accordance with para. 302.3.4(a). See also para. 302.3.4(b) and Table 302.3.4 for increased quality factors applicable in special cases. Specifications, except API, are ASTM.

Spec. No.	Class (or Type)	Description	E_j [Note (2)]	Appendix A Notes
Nickel and Nickel Alloy				
B160	. . .	Forgings and fittings	1.00	(9)
B161	. . .	Seamless pipe and tube	1.00	. . .
B164	. . .	Forgings and fittings	1.00	(9)
B165	. . .	Seamless pipe and tube	1.00	. . .
B167	. . .	Seamless pipe and tube	1.00	. . .
B366	. . .	Seamless and welded fittings	1.00	(16)
B407	. . .	Seamless pipe and tube	1.00	. . .
B444	. . .	Seamless pipe and tube	1.00	. . .
B464	. . .	Welded pipe	0.80	. . .
B514	. . .	Welded pipe	0.80	. . .
B517	. . .	Welded pipe	0.80	. . .
B564	. . .	Nickel alloy forgings	1.00	(9)
B619	. . .	Electric resistance welded pipe	0.85	. . .
		Electric fusion welded pipe, double butt seam	0.85	. . .
		Electric fusion welded pipe, single butt seam	0.80	. . .
B622	. . .	Seamless pipe and tube	1.00	. . .
B626	All	Electric resistance welded tube	0.85	. . .
		Electric fusion welded tube, double butt seam	0.85	. . .
		Electric fusion welded tube, single butt seam	0.80	. . .
B668	All	Seamless pipe and tube	1.00	. . .
B675	All	Welded pipe	0.80	. . .
B690	. . .	Seamless pipe	1.00	. . .
B705	. . .	Welded pipe	0.80	. . .
B725	. . .	Electric fusion welded pipe, double butt seam	0.85	. . .
		Electric fusion welded pipe, single butt seam	0.80	. . .
B729	. . .	Seamless pipe and tube	1.00	. . .
B804	1, 3, 5	Welded pipe, 100% radiographed	1.00	. . .
	2, 4	Welded pipe, double fusion welded	0.85	. . .
	6	Welded pipe, single fusion welded	0.80	. . .
Titanium and Titanium Alloy				
B861	. . .	Seamless pipe	1.00	. . .
B862	. . .	Welded pipe, double butt seam	0.85	. . .
		Welded pipe, single butt seam	0.80	. . .
Zirconium and Zirconium Alloy				
B523	. . .	Seamless tube	1.00	. . .
		Electric fusion welded tube	0.80	. . .
B658	. . .	Seamless pipe	1.00	. . .
		Electric fusion welded pipe	0.80	. . .
Aluminum Alloy				
B210	. . .	Seamless tube	1.00	. . .
B241	. . .	Seamless pipe and tube	1.00	. . .
B247	. . .	Forgings and fittings	1.00	(9)
B345	. . .	Seamless pipe and tube	1.00	. . .
B361	. . .	Seamless fittings	1.00	. . .
		Welded fittings, 100% radiographed	1.00	. . .
B547	. . .	Welded pipe and tube, 100% radiographed	1.00	. . .
		Welded pipe, double butt seam	0.85	. . .
		Welded pipe, single butt seam	0.80	. . .

Copyright © 2015 by the American Society of Mechanical Engineers.
No reproduction may be made of this material without written consent of ASME.

(14)

Table A-2 Design Stress Values for Bolting Materials

Numbers in Parentheses Refer to Notes for Appendix A Tables; Specifications Are ASTM

Nominal Composition	Product Form	Spec. No.	Type/ Grade	UNS No.	Class/ Condition/ Temper	Size Range, Dia., in.	Notes	Min. Temp., °F (6)	Specified Min. Strength, ksi Tensile	Specified Min. Strength, ksi Yield	Min. Temp. to 100	200	300	400	500
Carbon Steel															
. . .	Bolts	A675	45	D40450	. . .	. . .	(8f)(8g)	−20	45	22.5	11.3	11.3	11.3	11.3	11.3
. . .	Bolts	A675	50	D40500	. . .	. . .	(8f)(8g)	−20	50	25	12.5	12.5	12.5	12.5	12.5
. . .	Bolts	A675	55	D40550	. . .	. . .	(8f)(8g)	−20	55	27.5	13.8	13.8	13.8	13.8	13.8
. . .	Bolts	A307	B	. . .	. . .	. . .	(8f)(8g)	−20	60	. . .	15.0	15.0	15.0	15.0	15.0
. . .	Bolts	A675	60	D40600	. . .	. . .	(8f)(8g)	−20	60	30	15.0	15.0	15.0	15.0	15.0
. . .	Bolts	A675	65	D40650	. . .	. . .	(8g)	−20	65	32.5	16.3	16.3	16.3	16.3	16.3
. . .	Bolts	A675	70	D40700	. . .	. . .	(8g)	−20	70	35	17.5	17.5	17.5	17.5	17.5
. . .	Bolts	A325	. . .	. . .	. . .	. . .	(8g)	−20	105	81	20.3	20.3	20.3	20.3	20.3
. . .	Bolts	A675	80	D40800	. . .	. . .	(8g)	−20	80	40	20.0	20.0	20.0	20.0	20.0
. . .	Nuts	A194	1	K01503	. . .	. . .	(42)	−20	. . .	. . .	. . .	. . .	. . .	. . .	. . .
. . .	Nuts	A194	2	K04002	. . .	. . .	(42)	−55	. . .	. . .	. . .	. . .	. . .	. . .	. . .
. . .	Nuts	A194	2H	K04002	. . .	. . .	(42)	−55	. . .	. . .	. . .	. . .	. . .	. . .	. . .
. . .	Nuts	A194	2HM	K04002	. . .	. . .	(42)	−55	. . .	. . .	. . .	. . .	. . .	. . .	. . .
. . .	Nuts, hvy. hex	A563	A	K05802	. . .	. . .	(42b)	−20	. . .	. . .	. . .	. . .	. . .	. . .	. . .
Alloy Steel															
Cr–$^1/_5$Mo	Bolts	A193	B7M	G41400	. . .	≤ 4	. . .	−55	100	80	20.0	20.0	20.0	20.0	20.0
Cr–$^1/_5$Mo	Bolts	A320	L7M	G41400	. . .	≤ $2^1/_2$	. . .	−100	100	80	20.0	20.0	20.0	20.0	20.0
5Cr	Bolts	A193	B5	S50100	. . .	≤ 4	(15)	−20	100	80	20.0	20.0	20.0	20.0	20.0
Cr–Mo–V	Bolts	A193	B16	K14072	. . .	> $2^1/_2$, ≤ 4	(15)	−20	110	95	22.0	22.0	22.0	22.0	22.0
. . .	Bolts	A354	BC	. . .	. . .	. . .	(15)	0	115	99	23.0	23.0	23.0	23.0	23.0
Cr–Mo	Bolts	A193	B7	G41400	. . .	> $2^1/_2$, ≤ 4	(15)	−40	115	95	23.0	23.0	23.0	23.0	23.0
Ni–Cr–Mo	Bolts	A320	L43	G43400	. . .	≤ 4	(15)	−150	125	105	25.0	25.0	25.0	25.0	25.0
Cr–Mo	Bolts	A320	L7	G41400	. . .	≤ $2^1/_2$	(15)	−150	125	105	25.0	25.0	25.0	25.0	25.0
Cr–Mo	Bolts	A320	L7A	G40370	. . .	≤ $2^1/_2$	(15)	−150	125	105	25.0	25.0	25.0	25.0	25.0
Cr–Mo	Bolts	A320	L7B	G41370	. . .	≤ $2^1/_2$	(15)	−150	125	105	25.0	25.0	25.0	25.0	25.0
Cr–Mo	Bolts	A320	L7C	G87400	. . .	≤ $2^1/_2$	(15)	−150	125	105	25.0	25.0	25.0	25.0	25.0
Cr–Mo	Bolts	A193	B7	G41400	. . .	≤ $2^1/_2$	. . .	−55	125	105	25.0	25.0	25.0	25.0	25.0
Cr–Mo–V	Bolts	A193	B16	K14072	. . .	≤ $2^1/_2$	(15)	−20	125	105	25.0	25.0	25.0	25.0	25.0
. . .	Bolts	A354	BD	. . .	. . .	≤ $2^1/_2$	(15)	−20	150	130	30.0	30.0	30.0	30.0	30.0
5Cr	Nuts	A194	3	S50100	. . .	. . .	(42)	−20	. . .	. . .	. . .	. . .	. . .	. . .	. . .
C–Mo	Nuts	A194	4	K14510	. . .	. . .	(42)	−55	. . .	. . .	. . .	. . .	. . .	. . .	. . .
C–Mo	Nuts	A194	4L	K14510	. . .	. . .	(42)	−150	. . .	. . .	. . .	. . .	. . .	. . .	. . .
Cr–Mo	Nuts	A194	7	G41400	. . .	. . .	(42)	−55	. . .	. . .	. . .	. . .	. . .	. . .	. . .
Cr–Mo	Nuts	A194	7L	G41400	. . .	. . .	(42)	−150	. . .	. . .	. . .	. . .	. . .	. . .	. . .
Cr–Mo	Nuts	A194	7M	G41400	. . .	. . .	(42)	−55	. . .	. . .	. . .	. . .	. . .	. . .	. . .
Cr–Mo	Nuts	A194	7ML	G41400	. . .	. . .	(42)	−100	. . .	. . .	. . .	. . .	. . .	. . .	. . .
Stainless Steel															
16Cr–12Ni–2Mo	Bolts	A193	B8M	S31600	2	> $1^1/_4$, ≤ $1^1/_2$	(15)(60)	−325	90	50	18.8	17.3	15.6	14.3	13.3
16Cr–12Ni–2Mo	Bolts	A320	B8M	S31600	2	> $1^1/_4$, ≤ $1^1/_2$	(15)(60)	−325	90	50	18.8	17.3	15.6	14.3	13.3
18Cr–8Ni	Bolts	A193	B8	S30400	2	> $1^1/_4$, ≤ $1^1/_2$	(15)(60)	−325	100	50	18.8	16.7	15.0	13.8	12.9
18Cr–8Ni	Bolts	A320	B8	S30400	2	> $1^1/_4$, ≤ $1^1/_2$	(15)(60)	−325	100	50	18.8	16.7	15.0	13.8	12.9
18Cr–10Ni–Cb	Bolts	A193	B8C	. . .	2	> $1^1/_4$, ≤ $1^1/_2$	(15)(60)	−325	100	50	18.8	17.9	16.5	15.5	15.0
18Cr–10Ni–Cb	Bolts	A320	B8C	S34700	2	> $1^1/_4$, ≤ $1^1/_2$	(15)(60)	−325	100	50	18.8	17.9	16.5	15.5	15.0
18Cr–10Ni–Ti	Bolts	A193	B8T	S32100	2	> $1^1/_4$, ≤ $1^1/_2$	(15)(60)	−325	100	50	18.8	17.8	16.5	15.3	14.3
18Cr–10Ni–Ti	Bolts	A320	B8T	S32100	2	> $1^1/_4$, ≤ $1^1/_2$	(15)(60)	−325	100	50	18.8	17.8	16.5	15.3	14.3
18Cr–9Ni	Bolts	A320	B8F	S30300	1	. . .	(8f)(15)(39)	−325	75	30	18.8	16.7	15.0	13.8	12.9

Copyright © 2015 by the American Society of Mechanical Engineers.
No reproduction may be made of this material without written consent of ASME.

Table A-2 Design Stress Values for Bolting Materials (14)

Numbers in Parentheses Refer to Notes for Appendix A Tables; Specifications Are ASTM

Design Stress, ksi, at Metal Temperature, °F [Note (1)]																				
600	650	700	750	800	850	900	950	1,000	1,050	1,100	1,150	1,200	1,250	1,300	1,350	1,400	1,450	1,500	Type/ Grade	Spec. No.
																				Carbon Steel
11.3	11.1	10.7	10.4	9.2	7.9	5.9	4.0	...	...	...	...	...	...	...	...	...	...	...	45	A675
12.5	12.4	11.9	10.7	9.2	7.9	5.9	4.0	...	...	...	...	...	...	...	...	...	...	...	50	A675
13.8	13.6	13.1	12.7	10.8	8.7	5.9	4.0	...	...	...	...	...	...	...	...	...	...	...	55	A675
...	...	...	...	...	...	...	...	...	...	...	...	...	...	...	...	...	...	...	B	A307
15.0	14.8	14.3	13.8	11.4	8.7	5.9	4.0	...	...	...	...	...	...	...	...	...	...	...	60	A675
16.3	16.1	15.5	13.9	11.4	9.0	6.3	4.0	...	...	...	...	...	...	...	...	...	...	...	65	A675
17.5	17.3	16.7	14.8	12.0	9.3	6.7	4.0	...	...	...	...	...	...	...	...	...	...	...	70	A675
20.3	20.3	20.3	...	...	...	...	...	...	...	...	...	...	...	...	...	...	...	...	...	A325
20.0	19.8	19.1	...	...	...	...	...	...	...	...	...	...	...	...	...	...	...	...	80	A675
...	...	...	...	...	...	...	...	...	...	...	...	...	...	...	...	...	...	...	1	A194
...	...	...	...	...	...	...	...	...	...	...	...	...	...	...	...	...	...	...	2	A194
...	...	...	...	...	...	...	...	...	...	...	...	...	...	...	...	...	...	...	2H	A194
...	...	...	...	...	...	...	...	...	...	...	...	...	...	...	...	...	...	...	2HM	A194
...	...	...	...	...	...	...	...	...	...	...	...	...	...	...	...	...	...	...	A	A563
																				Alloy Steel
20.0	20.0	20.0	20.0	18.5	16.3	12.5	8.5	4.5	2.4	...	...	...	...	...	...	...	...	...	B7M	A193
20.0	20.0	20.0	20.0	18.5	16.3	12.5	8.5	4.5	2.4	...	...	...	...	...	...	...	...	...	L7M	A320
20.0	20.0	20.0	20.0	20.0	14.3	10.9	8.0	5.8	4.2	2.9	1.8	1.0	0.6	...	...	...	...	...	B5	A193
22.0	22.0	22.0	22.0	22.0	21.0	18.5	15.3	11.0	6.3	2.8	1.2	...	...	...	...	...	...	...	B16	A193
23.0	23.0	23.0	...	...	...	...	...	...	...	...	...	...	...	...	...	...	...	...	BC	A354
23.0	23.0	23.0	23.0	20.0	16.3	12.5	8.5	4.5	2.4	...	...	...	...	...	...	...	...	...	B7	A193
25.0	25.0	25.0	25.0	...	...	...	...	...	...	...	...	...	...	...	...	...	...	...	L43	A320
25.0	25.0	25.0	25.0	...	...	...	...	...	...	...	...	...	...	...	...	...	...	...	L7	A320
25.0	25.0	25.0	...	...	...	...	...	...	...	...	...	...	...	...	...	...	...	...	L7A	A320
25.0	25.0	25.0	...	...	...	...	...	...	...	...	...	...	...	...	...	...	...	...	L7B	A320
25.0	25.0	25.0	...	...	...	...	...	...	...	...	...	...	...	...	...	...	...	...	L7C	A320
25.0	25.0	25.0	25.0	21.0	17.0	12.5	8.5	4.5	2.4	...	...	...	...	...	...	...	...	...	B7	A193
25.0	25.0	25.0	25.0	25.0	23.5	20.5	16.0	11.0	6.3	2.8	1.2	...	...	...	...	...	...	...	B16	A193
30.0	30.0	30.0	...	...	...	...	...	...	...	...	...	...	...	...	...	...	...	...	BD	A354
...	...	...	...	...	...	...	...	...	...	...	...	...	...	...	...	...	...	...	3	A194
...	...	...	...	...	...	...	...	...	...	...	...	...	...	...	...	...	...	...	4	A194
...	...	...	...	...	...	...	...	...	...	...	...	...	...	...	...	...	...	...	4L	A194
...	...	...	...	...	...	...	...	...	...	...	...	...	...	...	...	...	...	...	7	A194
...	...	...	...	...	...	...	...	...	...	...	...	...	...	...	...	...	...	...	7L	A194
...	...	...	...	...	...	...	...	...	...	...	...	...	...	...	...	...	...	...	7M	A194
...	...	...	...	...	...	...	...	...	...	...	...	...	...	...	...	...	...	...	7ML	A194
																				Stainless Steel
12.6	12.5	12.5	12.5	12.5	12.5	12.5	12.5	12.5	12.5	...	...	...	...	...	...	...	...	...	B8M Cl. 2	A193
12.6	12.5	12.5	12.5	12.5	12.5	12.5	12.5	12.5	12.5	...	...	...	...	...	...	...	...	...	B8M Cl. 2	A320
12.5	12.5	12.5	12.5	12.5	12.5	12.5	12.5	12.5	12.5	...	...	...	...	...	...	...	...	...	B8 Cl. 2	A193
12.5	12.5	12.5	12.5	12.5	12.5	12.5	12.5	12.5	12.5	...	...	...	...	...	...	...	...	...	B8 Cl. 2	A320
14.3	14.0	13.8	13.7	13.6	13.5	13.4	13.4	13.4	12.5	...	...	...	...	...	...	...	...	...	B8C Cl. 2	A193
14.3	14.0	13.8	13.7	13.6	13.5	13.4	13.4	13.4	12.5	...	...	...	...	...	...	...	...	...	B8C Cl. 2	A320
13.5	13.2	13.0	12.7	12.6	12.5	12.5	12.5	12.5	12.5	...	...	...	...	...	...	...	...	...	B8T Cl. 2	A193
13.5	13.2	13.0	12.7	12.6	12.5	12.5	12.5	12.5	12.5	...	...	...	...	...	...	...	...	...	B8T Cl. 2	A320
12.3	12.0	11.7	11.5	11.2	11.0	...	...	...	...	...	...	...	...	...	...	...	...	...	B8F Cl. 1	A320

Copyright © 2015 by the American Society of Mechanical Engineers.
No reproduction may be made of this material without written consent of ASME.

(14)

Table A-2 Design Stress Values for Bolting Materials (Cont'd)

Numbers in Parentheses Refer to Notes for Appendix A Tables; Specifications Are ASTM

Nominal Composition	Product Form	Spec. No.	Type/ Grade	UNS No.	Class/ Condition/ Temper	Size Range, Dia., in.	Notes	Min. Temp., °F (6)	Specified Min. Strength, ksi		Min. Temp.				
									Tensile	Yield	to 100	200	300	400	500
Stainless Steel (Cont'd)															
19Cr–9Ni	Bolts	A453	651B	. . .	. . .	> 3	(15)(35)	−20	95	50	23.8	23.4	22.1	21.3	20.8
19Cr–9Ni	Bolts	A453	651B	. . .	. . .	≤ 3	(15)(35)	−20	95	60	23.8	23.4	22.1	21.3	20.8
19Cr–9Ni	Bolts	A453	651A	. . .	. . .	> 3	(15)(35)	−20	100	60	23.8	23.4	22.1	21.3	20.8
19Cr–9Ni	Bolts	A453	651A	. . .	. . .	≤ 3	(15)(35)	−20	100	70	23.8	23.4	22.1	21.3	20.8
16Cr–12Ni–2Mo	Bolts	A193	B8M	S31600	2	> 1, ≤ 1¼	(15)(60)	−325	105	65	18.8	17.3	16.3	16.3	16.3
16Cr–12Ni–2Mo	Bolts	A320	B8M	S31600	2	> 1, ≤ 1¼	(15)(60)	−325	105	65	18.8	17.3	16.3	16.3	16.3
18Cr–10Ni–Cb	Bolts	A193	B8C	. . .	2	> 1, ≤ 1¼	(15)(60)	−325	105	65	18.8	17.9	16.5	16.3	16.3
18Cr–10Ni–Cb	Bolts	A320	B8C	S34700	2	> 1, ≤ 1¼	(15)(60)	−325	105	65	18.8	17.9	16.5	16.3	16.3
18Cr–8Ni	Bolts	A193	B8	S30400	2	> 1, ≤ 1¼	(15)(60)	−325	105	65	18.8	16.7	16.3	16.3	16.3
18Cr–8Ni	Bolts	A320	B8	S30400	2	> 1, ≤ 1¼	(15)(60)	−325	105	65	18.8	16.7	16.3	16.3	16.3
18Cr–10Ni–Ti	Bolts	A193	B8T	S32100	2	> 1, ≤ 1¼	(15)(60)	−325	105	65	18.8	17.8	16.5	16.3	16.3
18Cr–10Ni–Ti	Bolts	A320	B8T	S32100	2	> 1, ≤ 1¼	(15)(60)	−325	105	65	18.8	17.8	16.5	16.3	16.3
18Cr–10Ni–Ti	Bolts	A193	B8T	S32100	1	. . .	(8f)(15)(28)	−325	75	30	18.8	17.8	16.5	15.3	14.3
18Cr–8Ni	Bolts	A320	B8	S30400	1	. . .	(8f)(15)(28)	−425	75	30	18.8	16.7	15.0	13.8	12.9
18Cr–10Ni–Cb	Bolts	A193	B8C	. . .	1	. . .	(8f)(15)(28)	−425	75	30	18.8	17.9	16.5	15.5	15.0
16Cr–12Ni–2Mo	Bolts	A193	B8M	S31600	1	. . .	(8f)(15)(28)	−325	75	30	18.8	17.3	15.6	14.3	13.3
16Cr–12Ni–2Mo	Bolts	A193	B8M	S31600	2	> ¾, ≤ 1	(15)(60)	−325	100	80	20.0	20.0	20.0	20.0	20.0
16Cr–12Ni–2Mo	Bolts	A320	B8M	S31600	2	> ¾, ≤ 1	(15)(60)	−325	100	80	20.0	20.0	20.0	20.0	20.0
18Cr–10Ni–Cb	Bolts	A193	B8C	. . .	2	> ¾, ≤ 1	(15)(60)	−325	115	80	20.0	20.0	20.0	20.0	20.0
18Cr–10Ni–Cb	Bolts	A320	B8C	S34700	2	> ¾, ≤ 1	(15)(60)	−325	115	80	20.0	20.0	20.0	20.0	20.0
18Cr–8Ni	Bolts	A193	B8	S30400	2	> ¾, ≤ 1	(15)(60)	−325	115	80	20.0	20.0	20.0	20.0	20.0
18Cr–8Ni	Bolts	A320	B8	S30400	2	> ¾, ≤ 1	(15)(60)	−325	115	80	20.0	20.0	20.0	20.0	20.0
18Cr–10Ni–Ti	Bolts	A193	B8T	S32100	2	> ¾, ≤ 1	(15)(60)	−325	115	80	20.0	20.0	20.0	20.0	20.0
18Cr–10Ni–Ti	Bolts	A320	B8T	S32100	2	> ¾, ≤ 1	(15)(60)	−325	115	80	20.0	20.0	20.0	20.0	20.0

Copyright © 2015 by the American Society of Mechanical Engineers.
No reproduction may be made of this material without written consent of ASME.

Table A-2 Design Stress Values for Bolting Materials (Cont'd)

Numbers in Parentheses Refer to Notes for Appendix A Tables; Specifications Are ASTM

Design Stress, ksi, at Metal Temperature, °F [Note (1)]																				
600	650	700	750	800	850	900	950	1,000	1,050	1,100	1,150	1,200	1,250	1,300	1,350	1,400	1,450	1,500	Type/ Grade	Spec. No.
																			Stainless Steel (Cont'd)	
20.5	20.4	20.3	20.2	20.0	19.7	19.3	18.9	18.2	17.5	...	...	...	...	...	...	...	...	...	651B	A453
20.5	20.4	20.3	20.2	20.0	19.7	19.3	18.9	18.2	17.5	...	...	...	...	...	...	...	...	...	651B	A453
20.5	20.4	20.3	20.2	20.0	19.7	19.3	18.9	18.2	17.5	...	...	...	...	...	...	...	...	...	651A	A453
20.5	20.4	20.3	20.2	20.0	19.7	19.3	18.9	18.2	17.5	...	...	...	...	...	...	...	...	...	651A	A453
16.3	16.3	16.3	16.3	16.3	16.3	16.3	16.3	16.3	16.3	...	...	...	...	...	...	...	...	...	B8M Cl. 2	A193
16.3	16.3	16.3	16.3	16.3	16.3	16.3	16.3	16.3	16.3	...	...	...	...	...	...	...	...	...	B8M Cl. 2	A320
16.3	16.3	16.3	16.3	16.3	16.3	16.3	16.3	16.3	16.3	...	...	...	...	...	...	...	...	...	B8C Cl. 2	A193
16.3	16.3	16.3	16.3	16.3	16.3	16.3	16.3	16.3	16.3	...	...	...	...	...	...	...	...	...	B8C Cl. 2	A320
16.3	16.3	16.3	16.3	16.3	16.3	16.3	16.3	16.3	16.3	...	...	...	...	...	...	...	...	...	B8 Cl. 2	A193
16.3	16.3	16.3	16.3	16.3	16.3	16.3	16.3	16.3	16.3	...	...	...	...	...	...	...	...	...	B8 Cl. 2	A320
16.3	16.3	16.3	16.3	16.3	16.3	16.3	16.3	16.3	16.3	...	...	...	...	...	...	...	...	...	B8T Cl. 2	A193
16.3	16.3	16.3	16.3	16.3	16.3	16.3	16.3	16.3	16.3	...	...	...	...	...	...	...	...	...	B8T Cl. 2	A320
13.5	13.2	13.0	12.7	12.6	12.4	12.3	12.1	12.0	9.6	6.9	5.0	3.6	2.6	1.7	1.1	0.8	0.5	0.3	B8T Cl. 1	A193
12.3	12.0	11.7	11.5	11.2	11.0	10.8	10.6	10.4	10.1	9.8	7.7	6.1	4.7	3.7	2.9	2.3	1.8	1.4	B8 Cl. 1	A320
14.3	14.0	13.8	13.7	13.6	13.5	13.4	13.4	13.4	12.1	9.1	6.1	4.4	3.3	2.2	1.5	1.2	0.9	0.8	B8C Cl. 1	A193
12.6	12.3	12.1	11.9	11.8	11.6	11.5	11.4	11.3	11.2	11.1	9.8	7.4	5.6	4.2	3.2	2.4	1.8	1.4	B8M Cl. 1	A193
20.0	20.0	20.0	20.0	20.0	20.0	20.0	20.0	20.0	20.0	...	...	...	...	...	...	...	...	...	B8M Cl. 2	A193
20.0	20.0	20.0	20.0	20.0	20.0	20.0	20.0	20.0	20.0	...	...	...	...	...	...	...	...	...	B8M Cl. 2	A320
20.0	20.0	20.0	20.0	20.0	20.0	20.0	20.0	20.0	20.0	...	...	...	...	...	...	...	...	...	B8C Cl. 2	A193
20.0	20.0	20.0	20.0	20.0	20.0	20.0	20.0	20.0	20.0	...	...	...	...	...	...	...	...	...	B8C Cl. 2	A320
20.0	20.0	20.0	20.0	20.0	20.0	20.0	20.0	20.0	20.0	...	...	...	...	...	...	...	...	...	B8 Cl. 2	A193
20.0	20.0	20.0	20.0	20.0	20.0	20.0	20.0	20.0	20.0	...	...	...	...	...	...	...	...	...	B8 Cl. 2	A320
20.0	20.0	20.0	20.0	20.0	20.0	20.0	20.0	20.0	20.0	...	...	...	...	...	...	...	...	...	B8T Cl. 2	A193
20.0	20.0	20.0	20.0	20.0	20.0	20.0	20.0	20.0	20.0	...	...	...	...	...	...	...	...	...	B8T Cl. 2	A320

Copyright © 2015 by the American Society of Mechanical Engineers.
No reproduction may be made of this material without written consent of ASME.

(14)

Table A-2 Design Stress Values for Bolting Materials (Cont'd)

Numbers in Parentheses Refer to Notes for Appendix A Tables; Specifications Are ASTM

Nominal Composition	Product Form	Spec. No.	Type/ Grade	UNS No.	Class/ Condition/ Temper	Size Range, Dia., in.	Notes	Min. Temp., °F (6)	Specified Min. Strength, ksi		Min. Temp. to 100	200	300	400	500
									Tensile	Yield					
Stainless Steel (Cont'd)															
12Cr	Bolts	A437	B4C	S42200	. . .	. . .	(35)	−20	115	85	21.3	21.3	21.3	21.3	21.3
13Cr	Bolts	A193	B6	S41000	. . .	≤ 4	(15)(35)	−20	110	85	21.3	21.3	21.3	21.3	21.3
14Cr–24Ni	Bolts	A453	660	. . .	A	. . .	(15)(35)	−20	130	85	22.5	22.5	22.5	22.5	22.1
14Cr–24Ni	Bolts	A453	660	. . .	B	. . .	(15)(35)	−20	130	85	22.5	22.5	22.5	22.5	22.1
16Cr–12Ni–2Mo	Bolts	A193	B8M	S31600	2	≤ 3/4	(15)(60)	−325	110	95	22.0	22.0	22.0	22.0	22.0
16Cr–12Ni–2Mo	Bolts	A320	B8M	S31600	2	≤ 3/4	(15)(60)	−325	110	95	22.0	22.0	22.0	22.0	22.0
18Cr–10Ni–Cb	Bolts	A193	B8C	. . .	2	≤ 3/4	(15)(60)	−325	125	100	25.0	25.0	25.0	25.0	25.0
18Cr–10Ni–Cb	Bolts	A320	B8C	S34700	2	≤ 3/4	(15)(60)	−325	125	100	25.0	25.0	25.0	25.0	25.0
18Cr–8Ni	Bolts	A193	B8	S30400	2	≤ 3/4	(15)(60)	−325	125	100	25.0	25.0	25.0	25.0	25.0
18Cr–8Ni	Bolts	A320	B8	S30400	2	≤ 3/4	(15)(60)	−325	125	100	25.0	25.0	25.0	25.0	25.0
18Cr–10Ni–Ti	Bolts	A193	B8T	S32100	2	≤ 3/4	(15)(60)	−325	125	100	25.0	25.0	25.0	25.0	25.0
18Cr–10Ni–Ti	Bolts	A320	B8T	S32100	2	≤ 3/4	(15)(60)	−325	125	100	25.0	25.0	25.0	25.0	25.0
12Cr	Bolts	A437	B4B	S42225	. . .	. . .	(35)	−20	145	105	26.3	26.3	26.3	26.3	26.3
12Cr	Nuts	A194	6	S41000	. . .	. . .	(35)(42)	−20	. . .	. . .	. . .	. . .	. . .	. . .	. . .
18Cr–9Ni	Nuts	A194	8FA	S30300	. . .	. . .	(42)	−20	. . .	. . .	. . .	. . .	. . .	. . .	. . .
16Cr–12Ni–2Mo	Nuts	A194	8MA	S31600	. . .	. . .	(42)	−325	. . .	. . .	. . .	. . .	. . .	. . .	. . .
18Cr–10Ni–Ti	Nuts	A194	8TA	S32100	. . .	. . .	(42)	−325	. . .	. . .	. . .	. . .	. . .	. . .	. . .
18Cr–8Ni	Nuts	A194	8	S30400	. . .	. . .	(42)	−425	. . .	. . .	. . .	. . .	. . .	. . .	. . .
18Cr–8Ni	Nuts	A194	8A	S30400	. . .	. . .	(42)	−425	. . .	. . .	. . .	. . .	. . .	. . .	. . .
18Cr–10Ni–Cb	Nuts	A194	8CA	S34700	. . .	. . .	(42)	−425	. . .	. . .	. . .	. . .	. . .	. . .	. . .

Copyright © 2015 by the American Society of Mechanical Engineers.
No reproduction may be made of this material without written consent of ASME.

Table A-2 Design Stress Values for Bolting Materials (Cont'd)

Numbers in Parentheses Refer to Notes for Appendix A Tables; Specifications Are ASTM

Design Stress, ksi, at Metal Temperature, °F [Note (1)]																				
600	650	700	750	800	850	900	950	1,000	1,050	1,100	1,150	1,200	1,250	1,300	1,350	1,400	1,450	1,500	Type/ Grade	Spec. No.
																			Stainless Steel (Cont'd)	
21.3	21.3	21.3	21.3	...	...	...	...	...	...	...	...	...	...	...	...	...	...	...	B4C	A437
21.3	21.3	21.3	21.3	21.3	21.3	20.2	18.7	...	...	...	...	...	...	...	...	...	...	...	B6	A193
21.7	21.5	21.3	21.3	21.3	21.3	21.3	21.3	21.3	21.3	...	...	...	...	...	...	...	...	...	660 Cl. A	A453
21.7	21.5	21.3	21.3	21.3	21.3	21.3	21.3	21.3	21.3	...	...	...	...	...	...	...	...	...	660 Cl. B	A453
22.0	22.0	22.0	22.0	22.0	22.0	22.0	22.0	22.0	22.0	...	...	...	...	...	...	...	...	...	B8M Cl. 2	A193
22.0	22.0	22.0	22.0	22.0	22.0	22.0	22.0	22.0	22.0	...	...	...	...	...	...	...	...	...	B8M Cl. 2	A320
24.6	24.5	24.5	24.5	24.5	24.5	24.4	24.2	23.9	23.5	...	...	...	...	...	...	...	...	...	B8C Cl. 2	A193
24.6	24.5	24.5	24.5	24.5	24.5	24.4	24.2	23.9	23.5	...	...	...	...	...	...	...	...	...	B8C Cl. 2	A320
25.0	25.0	25.0	25.0	25.0	25.0	25.0	24.7	23.9	22.9	...	...	...	...	...	...	...	...	...	B8 Cl. 2	A193
25.0	25.0	25.0	25.0	25.0	25.0	25.0	24.7	23.9	22.9	...	...	...	...	...	...	...	...	...	B8 Cl. 2	A320
25.0	25.0	25.0	25.0	25.0	25.0	25.0	25.0	25.0	25.0	...	...	...	...	...	...	...	...	...	B8T Cl. 2	A193
25.0	25.0	25.0	25.0	25.0	25.0	25.0	25.0	25.0	25.0	...	...	...	...	...	...	...	...	...	B8T Cl. 2	A320
26.3	26.3	26.3	...	...	...	...	...	...	...	...	...	...	...	...	...	...	...	...	B4B	A437
...	...	...	...	...	...	...	...	...	...	...	...	...	...	...	...	...	...	...	6	A194
...	...	...	...	...	...	...	...	...	...	...	...	...	...	...	...	...	...	...	8FA	A194
...	...	...	...	...	...	...	...	...	...	...	...	...	...	...	...	...	...	...	8MA	A194
...	...	...	...	...	...	...	...	...	...	...	...	...	...	...	...	...	...	...	8TA	A194
...	...	...	...	...	...	...	...	...	...	...	...	...	...	...	...	...	...	...	8	A194
...	...	...	...	...	...	...	...	...	...	...	...	...	...	...	...	...	...	...	8A	A194
...	...	...	...	...	...	...	...	...	...	...	...	...	...	...	...	...	...	...	8CA	A194

Copyright © 2015 by the American Society of Mechanical Engineers.
No reproduction may be made of this material without written consent of ASME.

Table A-2 Design Stress Values for Bolting Materials (Cont'd)

Numbers in Parentheses Refer to Notes for Appendix A Tables; Specifications Are ASTM

Nominal Composition	Product Form	Spec. No.	Type/ Grade	UNS No.	Class/ Condition/ Temper	Size Range, Dia., in.	Notes	Min. Temp., °F (6)	Specified Min. Strength, ksi Tensile	Specified Min. Strength, ksi Yield	Min. Temp. to 100	200	300	400
Copper and Copper Alloy														
Naval brass	Bolts	B21	. . .	C46400	O60	. . .	(8f)	−325	50	20	12.5	12.5	12.5	. . .
Naval brass	Bolts	B21	. . .	C48200	O60	. . .	(8f)	−325	50	20	12.5	12.5	12.5	. . .
Naval brass	Bolts	B21	. . .	C48500	O60	. . .	(8f)	−325	50	20	12.5	12.5	12.5	. . .
Cu	Bolts	B187	. . .	C10200	O60	. . .	(8f)	−325	30	10	6.7	5.4	5.0	. . .
Cu	Bolts	B187	. . .	C11000	O60	. . .	(8f)	−325	30	10	6.7	5.4	5.0	. . .
Cu	Bolts	B187	. . .	C12000	O60	. . .	(8f)	−325	30	10	6.7	5.4	5.0	. . .
Cu	Bolts	B187	. . .	C12200	O60	. . .	(8f)	−325	30	10	6.7	5.4	5.0	. . .
Cu–Si	Bolts	B98	. . .	C65100	O60	. . .	(8f)(52)	−325	40	12	8.0	8.0	7.1	. . .
Cu–Si	Bolts	B98	. . .	C65500	O60	. . .	(8f)(52)	−325	52	15	10.0	10.0	10.0	. . .
Cu–Si	Bolts	B98	. . .	C66100	O60	. . .	(8f)(52)	−325	52	15	10.0	10.0	10.0	. . .
Cu–Si	Bolts	B98	. . .	C65500	H01	. . .	(8f)	−325	55	24	10.0	10.0	10.0	. . .
Cu–Si	Bolts	B98	. . .	C66100	H01	. . .	(8f)	−325	55	24	10.0	10.0	10.0	. . .
Cu–Si	Bolts	B98	. . .	C65500	H02	≤ 2	. . .	−325	70	38	10.0	10.0	10.0	. . .
Cu–Si	Bolts	B98	. . .	C66100	H02	≤ 2	. . .	−325	70	38	10.0	10.0	10.0	. . .
Cu–Si	Bolts	B98	. . .	C65100	H06	> 1, ≤ 1½	. . .	−325	75	40	10.0	10.0	10.0	. . .
Cu–Si	Bolts	B98	. . .	C65100	H06	> ½, ≤ 1	. . .	−325	75	45	11.3	11.3	11.3	. . .
Cu–Si	Bolts	B98	. . .	C65100	H06	≤ ½	. . .	−325	85	55	13.8	13.8	13.8	.. .
Al–Si–bronze	Bolts	B150	. . .	C64200	HR50	> 1, ≤ 2	. . .	−325	80	42	16.7	13.9	13.4	10.8
Al–Si–bronze	Bolts	B150	. . .	C64200	HR50	> ½, ≤ 1	. . .	−325	85	42	16.7	13.9	13.4	10.8
Al–Si–bronze	Bolts	B150	. . .	C64200	HR50	≤ ½	. . .	−325	90	42	16.7	13.9	13.4	10.8
Al–bronze	Bolts	B150	. . .	C61400	HR50	> 1, ≤ 2	. . .	−325	70	32	17.5	17.5	17.5	17.2
Al–bronze	Bolts	B150	. . .	C61400	HR50	> ½, ≤ 1	. . .	−325	75	35	17.5	17.5	17.5	17.2
Al–bronze	Bolts	B150	. . .	C61400	HR50	≤ ½	. . .	−325	80	40	18.0	18.0	18.0	17.7
Al–bronze	Bolts	B150	. . .	C63000	HR50	> 2, ≤ 3	. . .	−325	85	42.5	21.3	21.3	21.0	20.7
Al–bronze	Bolts	B150	. . .	C63000	M20	> 3, ≤ 4	. . .	−325	85	42.5	20.0	19.6	19.1	18.8
Al–bronze	Bolts	B150	. . .	C63000	HR50	> 1, ≤ 2	. . .	−325	90	45	22.5	22.5	22.5	22.5
Al–bronze	Bolts	B150	. . .	C63000	HR50	> ½, ≤ 1	. . .	−325	100	50	22.5	22.5	22.5	22.5
Nickel and Nickel Alloy														
Low C–Ni	Bolts	B160	. . .	N02201	Hot fin./ann.	. . .	(8f)	−325	50	10	6.7	6.4	6.3	6.2
Ni	Bolts	B160	. . .	N02200	Hot fin.	. . .	(8f)	−325	60	15	10.0	10.0	10.0	10.0
Ni	Bolts	B160	. . .	N02200	Annealed	. . .	(8f)	−325	55	15	10.0	10.0	10.0	10.0
Ni	Bolts	B160	. . .	N02200	Cold drawn	. . .	. . .	−325	65	40	10.0	10.0	10.0	10.0
Ni–Cu	Bolts	B164	. . .	N04400	C.D./str. rel.	. . .	(54)	−325	84	50	16.7	14.6	13.6	13.2
Ni–Cu	Bolts	B164	. . .	N04405	Cold drawn	. . .	(54)	−325	85	50	16.7	14.6	13.6	13.2
Ni–Cu	Bolts	B164	. . .	N04400	Cold drawn	. . .	(54)	−325	85	55	16.7	14.6	13.8	13.8
Ni–Cu	Bolts	B164	. . .	N04400	Annealed	. . .	(8f)	−325	70	25	16.7	14.6	13.6	13.2
Ni–Cu	Bolts	B164	. . .	N04405	Annealed	. . .	(8f)	−325	70	25	16.7	14.6	13.6	13.2
Ni–Cu	Rod	B164	. . .	N04405	Hot fin.	≤ 3	. . .	−325	75	35	16.7	14.6	13.6	13.2
Ni–Cu	Hex	B164	. . .	N04400	Hot fin.	≥ 2⅛, ≤ 4	(8f)	−325	75	30	16.7	14.6	13.6	13.2
Ni–Cu	All except hex	B164	. . .	N04400	Hot fin.	> 2⅛	. . .	−325	80	40	16.7	14.6	13.6	13.2

Copyright © 2015 by the American Society of Mechanical Engineers.
No reproduction may be made of this material without written consent of ASME.

Table A-2 Design Stress Values for Bolting Materials (Cont'd)

Numbers in Parentheses Refer to Notes for Appendix A Tables; Specifications Are ASTM

Design Stress, ksi, at Metal Temperature, °F [Note (1)]																	
500	600	650	700	750	800	850	900	950	1,000	1,050	1,100	1,150	1,200	1,250	1,300	UNS No.	Spec. No.
																Copper and Copper Alloy	
...	...	...	...	...	...	...	...	...	...	...	...	...	...	...	...	C46400	B21
...	...	...	...	...	...	...	...	...	...	...	...	...	...	...	...	C48200	B21
...	...	...	...	...	...	...	...	...	...	...	...	...	...	...	...	C48500	B21
...	...	...	...	...	...	...	...	...	...	...	...	...	...	...	...	C10200	B187
...	...	...	...	...	...	...	...	...	...	...	...	...	...	...	...	C11000	B187
...	...	...	...	...	...	...	...	...	...	...	...	...	...	...	...	C12000	B187
...	...	...	...	...	...	...	...	...	...	...	...	...	...	...	...	C12200	B187
...	...	...	...	...	...	...	...	...	...	...	...	...	...	...	...	C65100	B98
...	...	...	...	...	...	...	...	...	...	...	...	...	...	...	...	C65500	B98
...	...	...	...	...	...	...	...	...	...	...	...	...	...	...	...	C66100	B98
...	...	...	...	...	...	...	...	...	...	...	...	...	...	...	...	C65500	B98
...	...	...	...	...	...	...	...	...	...	...	...	...	...	...	...	C66100	B98
...	...	...	...	...	...	...	...	...	...	...	...	...	...	...	...	C65500	B98
...	...	...	...	...	...	...	...	...	...	...	...	...	...	...	...	C66100	B98
...	...	...	...	...	...	...	...	...	...	...	...	...	...	...	...	C65100	B98
...	...	...	...	...	...	...	...	...	...	...	...	...	...	...	...	C65100	B98
...	...	...	...	...	...	...	...	...	...	...	...	...	...	...	...	C65100	B98
5.2	1.7	1.2	...	...	...	...	...	...	...	...	...	...	...	...	...	C64200	B150
5.2	1.7	1.2	...	...	...	...	...	...	...	...	...	...	...	...	...	C64200	B150
5.2	1.7	1.2	...	...	...	...	...	...	...	...	...	...	...	...	...	C64200	B150
16.0	...	...	...	...	...	...	...	...	...	...	...	...	...	...	...	C61400	B150
16.0	...	...	...	...	...	...	...	...	...	...	...	...	...	...	...	C61400	B150
16.4	...	...	...	...	...	...	...	...	...	...	...	...	...	...	...	C61400	B150
19.4	12.0	8.6	6.0	4.2	...	...	...	...	...	...	...	...	...	...	...	C63000	B150
17.6	12.0	8.6	6.0	4.2	...	...	...	...	...	...	...	...	...	...	...	C63000	B150
21.1	12.0	8.6	6.0	4.2	...	...	...	...	...	...	...	...	...	...	...	C63000	B150
21.1	12.0	8.6	6.0	4.2	...	...	...	...	...	...	...	...	...	...	...	C63000	B150
																Nickel and Nickel Alloy	
6.2	6.2	6.2	6.2	6.1	6.0	5.8	4.5	3.7	3.0	2.4	2.0	1.5	1.2	1.0	...	N02201	B160
10.0	10.0	10.0	...	...	...	...	...	...	...	...	...	...	...	...	...	N02200	B160
10.0	10.0	10.0	...	...	...	...	...	...	...	...	...	...	...	...	...	N02200	B160
10.0	10.0	10.0	...	...	...	...	...	...	...	...	...	...	...	...	...	N02200	B160
13.1	13.1	13.1	...	...	...	...	...	...	...	...	...	...	...	...	...	N04400	B164
13.1	...	...	...	...	...	...	...	...	...	...	...	...	...	...	...	N04405	B164
13.8	...	...	...	...	...	...	...	...	...	...	...	...	...	...	...	N04400	B164
13.1	13.1	13.1	13.0	12.9	12.7	12.6	12.5	9.2	...	...	...	...	...	...	...	N04400	B164
13.1	13.1	13.1	13.0	12.9	12.7	12.6	12.5	9.2	...	...	...	...	...	...	...	N04405	B164
13.1	13.1	13.1	13.0	12.9	12.7	12.6	12.5	9.2	...	...	...	...	...	...	...	N04405	B164
13.1	13.1	13.1	13.0	12.9	12.7	12.6	12.5	9.2	...	...	...	...	...	...	...	N04400	B164
13.1	13.1	13.1	13.0	12.9	12.7	12.6	12.5	9.2	...	...	...	...	...	...	...	N04400	B164

Copyright © 2015 by the American Society of Mechanical Engineers.
No reproduction may be made of this material without written consent of ASME.

Table A-2 Design Stress Values for Bolting Materials (Cont'd)

Numbers in Parentheses Refer to Notes for Appendix A Tables; Specifications Are ASTM

Nominal Composition	Product Form	Spec. No.	Type/ Grade	UNS No.	Class/ Condition/ Temper	Size Range, Dia., in.	Notes	Min. Temp., °F (6)	Specified Min. Strength, ksi		Min. Temp. to			
									Tensile	Yield	100	200	300	400
Nickel and Nickel Alloy (Cont'd)														
Ni–Cr–Fe	Rod	B166	. . .	N06600	Cold drawn	≤ 3	(41)(54)	−325	105	80	20.0	20.0	20.0	20.0
Ni–Cr–Fe	Rod	B166	. . .	N06600	Hot fin.	≤ 3	. . .	−325	90	40	16.7	15.9	15.2	14.6
Ni–Cr–Fe	Bolts	B166	. . .	N06600	Annealed	. . .	. . .	−325	80	35	16.7	15.9	15.2	14.6
Ni–Cr–Fe	Rod	B166	. . .	N06600	Hot fin.	> 3	. . .	−325	85	35	16.7	15.9	15.2	14.6
Ni–Mo	Bolts	B335	. . .	N10001	Annealed	. . .	. . .	−325	100	46	25.0	25.0	25.0	24.6
Ni–Mo–Cr	Bolts	B574	. . .	N10276	Sol. ann.	. . .	. . .	−325	100	41	25.0	24.9	23.0	21.3
Aluminum Alloy														
. . .	Bolts	B211	6061	A96061	T6, T651 wld.	≥ 1/8, ≤ 8	(8f)(43)(63)	−452	24	. . .	4.8	4.8	4.8	3.6
. . .	Bolts	B211	6061	A96061	T6, T651	≥ 1/8, ≤ 8	(43)(63)	−452	42	35	8.4	8.4	8.4	4.8
. . .	Bolts	B211	2024	A92024	T4	> 6 1/2, ≤ 8	(43)(63)	−452	58	38	9.5	9.5	9.5	4.2
. . .	Bolts	B211	2024	A92024	T4	> 4 1/2, ≤ 6 1/2	(43)(63)	−452	62	40	10.0	10.0	10.0	4.5
. . .	Bolts	B211	2024	A92024	T4	≥ 1/2, ≤ 4 1/2	(43)(63)	−452	62	42	10.5	10.5	10.3	4.5
. . .	Bolts	B211	2024	A92024	T4	≥ 1/8, < 1/2	(43)(63)	−452	62	45	11.3	11.3	10.3	4.5
. . .	Bolts	B211	2014	A92014	T6, T651	≥ 1/8, ≤ 8	(43)(63)	−452	65	55	13.0	13.0	12.4	4.3

Copyright © 2015 by the American Society of Mechanical Engineers.
No reproduction may be made of this material without written consent of ASME.

Table A-2 Design Stress Values for Bolting Materials (Cont'd)

Numbers in Parentheses Refer to Notes for Appendix A Tables; Specifications Are ASTM

Design Stress, ksi, at Metal Temperature, °F [Note (1)]																	
500	600	650	700	750	800	850	900	950	1,000	1,050	1,100	1,150	1,200	1,250	1,300	UNS No.	Spec. No.
																	Nickel and Nickel Alloy (Cont'd)
20.0	...	...	...	...	...	...	...	...	...	...	...	...	...	...	...	N06600	B166
14.0	13.5	13.3	13.1	12.9	12.7	12.5	12.4	10.0	7.0	4.5	3.0	2.2	2.0	1.8	...	N06600	B166
14.0	13.5	13.3	13.1	12.9	12.7	12.5	12.4	9.2	7.0	4.5	3.0	2.2	2.0	1.8	...	N06600	B166
14.0	13.5	13.3	13.1	12.9	12.7	12.5	12.4	9.2	7.0	4.5	3.0	2.2	2.0	1.8	...	N06600	B166
24.3	23.6	23.3	23.0	22.8	22.6	22.5	...	...	...	...	...	...	...	...	...	N10001	B335
19.9	18.7	18.2	17.8	17.4	17.1	16.9	16.7	16.6	16.5	16.5	...	...	...	...	...	N10276	B574
																	Aluminum Alloy
...	...	...	...	...	...	...	...	...	...	...	...	...	...	...	...	A96061	B211
...	...	...	...	...	...	...	...	...	...	...	...	...	...	...	...	A96061	B211
...	...	...	...	...	...	...	...	...	...	...	...	...	...	...	...	A92024	B211
...	...	...	...	...	...	...	...	...	...	...	...	...	...	...	...	A92024	B211
...	...	...	...	...	...	...	...	...	...	...	...	...	...	...	...	A92024	B211
...	...	...	...	...	...	...	...	...	...	...	...	...	...	...	...	A92024	B211
...	...	...	...	...	...	...	...	...	...	...	...	...	...	...	...	A92014	B211

Copyright © 2015 by the American Society of Mechanical Engineers.
No reproduction may be made of this material without written consent of ASME.

(14)

Table A-2M Design Stress Values for Bolting Materials (Metric)

Numbers in Parentheses Refer to Notes for Appendix A Tables; Specifications Are ASTM Unless Otherwise Indicated

Line No.	Nominal Composition	Product Form	Spec. No.	Type/ Grade	UNS No.	Class/ Condition/ Temper	Size Range, Dia., mm	Notes
1	Carbon steel	Bolts	A675	45	D40450	. . .	. . .	(8f)(8g)
2	Carbon steel	Bolts	A675	50	D40500	. . .	. . .	(8f)(8g)
3	Carbon steel	Bolts	A675	55	D40550	. . .	. . .	(8f)(8g)
4	Carbon steel	Bolts	A307	B	. . .	. . .	. . .	(8f)(8g)
5	Carbon steel	Bolts	A675	60	D40600	. . .	. . .	(8f)(8g)
6	Carbon steel	Bolts	A675	65	D40650	. . .	. . .	(8g)
7	Carbon steel	Bolts	A675	70	D40700	. . .	. . .	(8g)
8	Carbon steel	Bolts	A325	. . .	. . .	. . .	. . .	(8g)
9	Carbon steel	Bolts	A675	80	D40800	. . .	. . .	(8g)
10	Carbon steel	Nuts	A194	1	K01503	. . .	. . .	(42)
11	Carbon steel	Nuts	A194	2, 2H	K04002	. . .	. . .	(42)
12	Carbon steel	Nuts	A194	2HM	K04002	. . .	. . .	(42)
13	Carbon steel	Nuts	A563	A, hvy. hex	K05802	. . .	. . .	(42b)
14	Cr–0.2Mo	Bolts	A193	B7M	G41400	. . .	≤ 100	. . .
15	Cr–0.2Mo	Bolts	A320	L7M	G41400	. . .	≤ 64	. . .
16	5Cr	Bolts	A193	B5	S50100	. . .	≤ 100	(15)
17	Cr–Mo–V	Bolts	A193	B16	K14072	. . .	> 64, ≤ 100	(15)
18	Alloy steel	Bolts	A354	BC	. . .	. . .	. . .	(15)
19	Cr–Mo	Bolts	A193	B7	G41400	. . .	> 64, ≤ 100	(15)
20	Ni–Cr–Mo	Bolts	A320	L43	G43400	. . .	≤ 100	(15)
21	Cr–Mo	Bolts	A320	L7	G41400	. . .	≤ 64	(15)
22	Cr–Mo	Bolts	A320	L7A	G40370	. . .	≤ 64	(15)
23	Cr–Mo	Bolts	A320	L7B	G41370	. . .	≤ 64	(15)
24	Cr–Mo	Bolts	A320	L7C	G87400	. . .	≤ 64	(15)
25	Cr–Mo	Bolts	A193	B7	G41400	. . .	≤ 64	. . .
26	Cr–Mo–V	Bolts	A193	B16	K14072	. . .	≤ 64	(15)
27	Alloy steel	Bolts	A354	BD	. . .	. . .	≤ 64	(15)
28	5Cr	Nuts	A194	3	S50100	. . .	. . .	(42)
29	C–Mo	Nuts	A194	4	K14510	. . .	. . .	(42)
30	C–Mo	Nuts	A194	4L	K14510	. . .	. . .	(42)
31	Cr–Mo	Nuts	A194	7	G41400	. . .	. . .	(42)
32	Cr–Mo	Nuts	A194	7L	G41400	. . .	. . .	(42)
33	Cr–Mo	Nuts	A194	7M	G41400	. . .	. . .	(42)
34	Cr–Mo	Nuts	A194	7ML	G41400	. . .	. . .	(42)

Copyright © 2015 by the American Society of Mechanical Engineers.
No reproduction may be made of this material without written consent of ASME.

Table A-2M Design Stress Values for Bolting Materials (Metric) (14)

Numbers in Parentheses Refer to Notes for Appendix A Tables; Specifications Are ASTM Unless Otherwise Indicated

Line No.	Min. Temp., °C (6)	Min. Tensile Strength, MPa	Min. Yield Strength, MPa	Max. Use Temp., °C	Allowable Stress, *S*, MPa, at Metal Temperature, °C [Note (1)] Min. Temp. to 40	65	100	125	150	175	200	225
1	−30	310	155	482	77.6	77.6	77.6	77.6	77.6	77.6	77.6	77.6
2	−30	345	172	482	86.2	86.2	86.2	86.2	86.2	86.2	86.2	86.2
3	−30	379	190	482	94.8	94.8	94.8	94.8	94.8	94.8	94.8	94.8
4	−30	414	414	260	103	103	103	103	103	103	103	103
5	−30	414	207	482	103	103	103	103	103	103	103	103
6	−30	448	224	538	112	112	112	112	112	112	112	112
7	−30	483	241	538	121	121	121	121	121	121	121	121
8	−30	724	558	343	140	140	140	140	140	140	140	140
9	−30	552	276	343	138	138	138	138	138	138	138	138
10	−30	...	...	40	...	...	...	...	...	...	...	...
11	−50	...	...	40	...	...	...	...	...	...	...	...
12	−50	...	...	40	...	...	...	...	...	...	...	...
13	−30	...	...	40	...	...	...	...	...	...	...	...
14	−50	689	552	538	138	138	138	138	138	138	138	138
15	−75	689	552	538	138	138	138	138	138	138	138	138
16	−30	689	552	649	138	138	138	138	138	138	138	138
17	−30	758	655	593	152	152	152	152	152	152	152	152
18	−20	793	683	343	159	159	159	159	159	159	159	159
19	−40	793	655	538	159	159	159	159	159	159	159	159
20	−100	862	724	371	172	172	172	172	172	172	172	172
21	−100	862	724	371	172	172	172	172	172	172	172	172
22	−100	862	724	343	172	172	172	172	172	172	172	172
23	−100	862	724	343	172	172	172	172	172	172	172	172
24	−100	862	724	343	172	172	172	172	172	172	172	172
25	−50	862	724	538	172	172	172	172	172	172	172	172
26	−30	862	724	593	172	172	172	172	172	172	172	172
27	−30	1034	896	343	207	207	207	207	207	207	207	207
28	−30	...	...	40	...	...	...	...	...	...	...	...
29	−48	...	...	593	...	...	...	...	...	...	...	...
30	−101	...	...	593	...	...	...	...	...	...	...	...
31	−48	...	...	593	...	...	...	...	...	...	...	...
32	−101	...	...	593	...	...	...	...	...	...	...	...
33	−48	...	...	593	...	...	...	...	...	...	...	...
34	−73	...	...	593	...	...	...	...	...	...	...	...

Copyright © 2015 by the American Society of Mechanical Engineers.
No reproduction may be made of this material without written consent of ASME.

(14)

Table A-2M Design Stress Values for Bolting Materials (Metric)

Numbers in Parentheses Refer to Notes for Appendix A Tables; Specifications Are ASTM Unless Otherwise Indicated

	Allowable Stress, *S*, MPa, at Metal Temperature, °C [Note (1)]											
Line No.	250	275	300	325	350	375	400	425	450	475	500	525
1	77.6	77.6	77.6	77.6	76.0	73.7	71.5	64.0	55.8	43.9	31.7	...
2	86.2	86.2	86.2	86.2	84.5	81.9	73.3	64.0	55.8	43.9	31.7	...
3	94.8	94.8	94.8	94.8	92.9	90.1	87.4	75.3	62.1	45.0	31.7	...
4	103	103	...	...	...	...	...	...	...	...	...	...
5	103	103	103	103	101	98.3	95.1	79.5	62.6	45.0	31.7	...
6	112	112	112	112	110	106	95.1	79.5	64.4	47.7	32.5	21.4
7	121	121	121	121	118	115	101	83.8	66.8	50.3	33.2	21.4
8	140	140	140	140	140	...	...	...	...	...	...	...
9	138	138	138	138	135	...	...	...	...	...	...	...
10	...	...	...	...	...	...	...	...	...	...	...	...
11	...	...	...	...	...	...	...	...	...	...	...	...
12	...	...	...	...	...	...	...	...	...	...	...	...
13	...	...	...	...	...	...	...	...	...	...	...	...
14	138	138	138	138	138	138	138	138	115	92.3	67.3	41.6
15	138	138	138	138	138	138	138	138	115	92.3	67.3	41.6
16	138	138	138	138	138	138	138	138	138	80.6	61.7	46.4
17	152	152	152	152	152	152	152	152	148	132	113	88.3
18	159	159	159	159	159	...	...	...	...	...	...	...
19	159	159	159	159	159	159	159	159	116	92.3	67.3	41.6
20	172	172	172	172	172	172	...	...	...	...	...	...
21	172	172	172	172	172	172	...	...	...	...	...	...
22	172	172	172	172	172	...	...	...	...	...	...	...
23	172	172	172	172	172	...	...	...	...	...	...	...
24	172	172	172	172	172	...	...	...	...	...	...	...
25	172	172	172	172	172	172	172	172	121	93.4	67.3	41.6
26	172	172	172	172	172	172	172	172	166	146	121	90.1
27	207	207	207	207	207	...	...	...	...	...	...	...
28	...	...	...	...	...	...	...	...	...	...	...	...
29	...	...	...	...	...	...	...	...	...	...	...	...
30	...	...	...	...	...	...	...	...	...	...	...	...
31	...	...	...	...	...	...	...	...	...	...	...	...
32	...	...	...	...	...	...	...	...	...	...	...	...
33	...	...	...	...	...	...	...	...	...	...	...	...
34	...	...	...	...	...	...	...	...	...	...	...	...

Copyright © 2015 by the American Society of Mechanical Engineers.
No reproduction may be made of this material without written consent of ASME.

Table A-2M Design Stress Values for Bolting Materials (Metric) (14)

Numbers in Parentheses Refer to Notes for Appendix A Tables; Specifications Are ASTM Unless Otherwise Indicated

	Allowable Stress, *S*, MPa, at Metal Temperature, °C [Note (1)]											
Line No.	550	575	600	625	650	675	700	725	750	775	800	825
1	...	...	...	...	...	...	...	...	...	...	...	...
2	...	...	...	...	...	...	...	...	...	...	...	...
3	...	...	...	...	...	...	...	...	...	...	...	...
4	...	...	...	...	...	...	...	...	...	...	...	...
5	...	...	...	...	...	...	...	...	...	...	...	...
6	14.2	...	...	...	...	...	...	...	...	...	...	...
7	14.2	...	...	...	...	...	...	...	...	...	...	...
8	...	...	...	...	...	...	...	...	...	...	...	...
9	...	...	...	...	...	...	...	...	...	...	...	...
10	...	...	...	...	...	...	...	...	...	...	...	...
11	...	...	...	...	...	...	...	...	...	...	...	...
12	...	...	...	...	...	...	...	...	...	...	...	...
13	...	...	...	...	...	...	...	...	...	...	...	...
14	23.5	...	...	...	...	...	...	...	...	...	...	...
15	23.5	...	...	...	...	...	...	...	...	...	...	...
16	34.7	25.5	17.8	11.4	6.7	...	...	...	...	...	...	...
17	59.3	33.0	15.9	...	...	...	...	...	...	...	...	...
18	...	...	...	...	...	...	...	...	...	...	...	...
19	23.5	...	...	...	...	...	...	...	...	...	...	...
20	...	...	...	...	...	...	...	...	...	...	...	...
21	...	...	...	...	...	...	...	...	...	...	...	...
22	...	...	...	...	...	...	...	...	...	...	...	...
23	...	...	...	...	...	...	...	...	...	...	...	...
24	...	...	...	...	...	...	...	...	...	...	...	...
25	23.5	...	...	...	...	...	...	...	...	...	...	...
26	59.3	33.0	15.9	...	...	...	...	...	...	...	...	...
27	...	...	...	...	...	...	...	...	...	...	...	...
28	...	...	...	...	...	...	...	...	...	...	...	...
29	...	...	...	...	...	...	...	...	...	...	...	...
30	...	...	...	...	...	...	...	...	...	...	...	...
31	...	...	...	...	...	...	...	...	...	...	...	...
32	...	...	...	...	...	...	...	...	...	...	...	...
33	...	...	...	...	...	...	...	...	...	...	...	...
34	...	...	...	...	...	...	...	...	...	...	...	...

Copyright © 2015 by the American Society of Mechanical Engineers.
No reproduction may be made of this material without written consent of ASME.

Table A-2M Design Stress Values for Bolting Materials (Metric) (Cont'd)

Numbers in Parentheses Refer to Notes for Appendix A Tables; Specifications Are ASTM Unless Otherwise Indicated

Line No.	Nominal Composition	Product Form	Spec. No.	Type/ Grade	UNS No.	Class/ Condition/ Temper	Size Range, Dia., mm	Notes
35	16Cr–12Ni–2Mo	Bolts	A193	B8M	S31600	2	> 32, ≤ 38	(15)(60)
36	16Cr–12Ni–2Mo	Bolts	A320	B8M	S31600	2	> 32, ≤ 38	(15)(60)
37	18Cr–8Ni	Bolts	A193	B8	S30400	2	> 32, ≤ 38	(15)(60)
38	18Cr–8Ni	Bolts	A320	B8	S30400	2	> 32, ≤ 38	(15)(60)
39	18Cr–10Ni–Cb	Bolts	A193	B8C	. . .	2	> 32, ≤ 38	(15)(60)
40	18Cr–10Ni–Cb	Bolts	A320	B8C	S34700	2	> 32, ≤ 38	(15)(60)
41	18Cr–10Ni–Ti	Bolts	A193	B8T	S32100	2	> 32, ≤ 38	(15)(60)
42	18Cr–10Ni–Ti	Bolts	A320	B8T	S32100	2	> 32, ≤ 38	(15)(60)
43	18Cr–9Ni	Bolts	A320	B8F	S30300	1	. . .	(8f)(15)(39)
44	19Cr–9Ni	Bolts	A453	651B	. . .	. . .	> 75	(15)(35)
45	19Cr–9Ni	Bolts	A453	651B	. . .	. . .	≤ 75	(15)(35)
46	19Cr–9Ni	Bolts	A453	651A	. . .	. . .	> 75	(15)(35)
47	19Cr–9Ni	Bolts	A453	651A	. . .	. . .	≤ 75	(15)(35)
48	16Cr–12Ni–2Mo	Bolts	A193	B8M	S31600	2	> 25, ≤ 32	(15)(60)
49	16Cr–12Ni–2Mo	Bolts	A320	B8M	S31600	2	> 25, ≤ 32	(15)(60)
50	18Cr–10Ni–Cb	Bolts	A193	B8C	. . .	2	> 25, ≤ 32	(15)(60)
51	18Cr–10Ni–Cb	Bolts	A320	B8C	S34700	2	> 25, ≤ 32	(15)(60)
52	18Cr–8Ni	Bolts	A193	B8	S30400	2	> 25, ≤ 32	(15)(60)
53	18Cr–8Ni	Bolts	A320	B8	S30400	2	> 25, ≤ 32	(15)(60)
54	18Cr–10Ni–Ti	Bolts	A193	B8T	S32100	2	> 25, ≤ 32	(15)(60)
55	18Cr–10Ni–Ti	Bolts	A320	B8T	S32100	2	> 25, ≤ 32	(15)(60)
56	18Cr–10Ni–Ti	Bolts	A193	B8T	S32100	1	. . .	(8f)(15)(28)
57	18Cr–8Ni	Bolts	A320	B8	S30400	1	. . .	(8f)(15)(28)
58	18Cr–10Ni–Cb	Bolts	A193	B8C	. . .	1	. . .	(8f)(15)(28)
59	16Cr–12Ni–2Mo	Bolts	A193	B8M	S31600	1	. . .	(8f)(15)(28)
60	16Cr–12Ni–2Mo	Bolts	A193	B8M	S31600	2	> 19, ≤ 25	(15)(60)
61	16Cr–12Ni–2Mo	Bolts	A320	B8M	S31600	2	> 19, ≤ 25	(15)(60)
62	18Cr–10Ni–Cb	Bolts	A193	B8C	. . .	2	> 19, ≤ 25	(15)(60)
63	18Cr–10Ni–Cb	Bolts	A320	B8C	S34700	2	> 19, ≤ 25	(15)(60)
64	18Cr–8Ni	Bolts	A193	B8	S30400	2	> 19, ≤ 25	(15)(60)
65	18Cr–8Ni	Bolts	A320	B8	S30400	2	> 19, ≤ 25	(15)(60)
66	18Cr–10Ni–Ti	Bolts	A193	B8T	S32100	2	> 19, ≤ 25	(15)(60)
67	18Cr–10Ni–Ti	Bolts	A320	B8T	S32100	2	> 19, ≤ 25	(15)(60)
68	12Cr	Bolts	A437	B4C	S42200	. . .	. . .	(35)

Copyright © 2015 by the American Society of Mechanical Engineers.
No reproduction may be made of this material without written consent of ASME.

Table A-2M Design Stress Values for Bolting Materials (Metric) (Cont'd) (14)

Numbers in Parentheses Refer to Notes for Appendix A Tables; Specifications Are ASTM Unless Otherwise Indicated

					Allowable Stress, *S*, MPa, at Metal Temperature, °C [Note (1)]							
Line No.	Min. Temp., °C (6)	Min. Tensile Strength, MPa	Min. Yield Strength, MPa	Max. Use Temp., °C	Min. Temp. to 40	65	100	125	150	175	200	225
35	−200	621	345	538	129	126	118	112	107	103	99.1	95.8
36	−200	621	345	538	129	126	118	112	107	103	99.1	95.8
37	−200	689	345	538	129	123	113	108	103	99.0	95.6	92.7
38	−200	689	345	538	129	123	113	108	103	99.0	95.6	92.7
39	−200	689	345	538	129	129	122	117	113	110	108	105
40	−200	689	345	538	129	129	122	117	113	110	108	105
41	−200	689	345	538	129	129	121	118	114	110	106	103
42	−200	689	345	538	129	129	121	118	114	110	106	103
43	−200	517	207	427	129	123	113	108	103	99.0	95.6	92.7
44	−30	655	345	538	164	164	160	156	152	149	147	145
45	−30	655	414	538	164	164	160	156	152	149	147	145
46	−30	689	414	538	164	164	160	156	152	149	147	145
47	−30	689	483	538	164	164	160	156	152	149	147	145
48	−200	724	448	538	129	126	118	112	112	112	112	112
49	−200	724	448	538	129	126	118	112	112	112	112	112
50	−200	724	448	538	129	129	122	117	113	112	112	112
51	−200	724	448	538	129	129	122	117	113	112	112	112
52	−200	724	448	538	129	123	113	112	112	112	112	112
53	−200	724	448	538	129	123	113	112	112	112	112	112
54	−200	724	448	538	129	129	121	118	114	112	112	112
55	−200	724	448	538	129	129	121	118	114	112	112	112
56	−200	517	207	816	129	129	121	118	114	110	106	103
57	−255	517	207	816	129	123	113	108	103	99.0	95.6	92.7
58	−255	517	207	816	129	129	122	117	113	110	108	105
59	−200	517	207	816	129	126	118	112	107	103	99.1	95.8
60	−200	689	552	538	138	138	138	138	138	138	138	138
61	−200	689	552	538	138	138	138	138	138	138	138	138
62	−200	793	552	538	138	138	138	138	138	138	138	138
63	−200	793	552	538	138	138	138	138	138	138	138	138
64	−200	793	552	538	138	138	138	138	138	138	138	138
65	−200	793	552	538	138	138	138	138	138	138	138	138
66	−200	793	552	538	138	138	138	138	138	138	138	138
67	−200	793	552	538	138	138	138	138	138	138	138	138
68	−30	793	586	371	147	147	147	147	147	147	147	147

Copyright © 2015 by the American Society of Mechanical Engineers.
No reproduction may be made of this material without written consent of ASME.

Table A-2M Design Stress Values for Bolting Materials (Metric) (Cont'd)

Numbers in Parentheses Refer to Notes for Appendix A Tables; Specifications Are ASTM Unless Otherwise Indicated

	Allowable Stress, *S*, MPa, at Metal Temperature, °C [Note (1)]											
Line No.	250	275	300	325	350	375	400	425	450	475	500	525
35	92.8	90.3	88.1	86.2	86.2	86.2	86.2	86.2	86.2	86.2	86.2	86.2
36	92.8	90.3	88.1	86.2	86.2	86.2	86.2	86.2	86.2	86.2	86.2	86.2
37	90.1	87.9	86.2	86.2	86.2	86.2	86.2	86.2	86.2	86.2	86.2	86.2
38	90.1	87.9	86.2	86.2	86.2	86.2	86.2	86.2	86.2	86.2	86.2	86.2
39	104	102	99.9	98.0	96.4	95.2	94.2	93.5	93.0	92.7	92.6	92.4
40	104	102	99.9	98.0	96.4	95.2	94.2	93.5	93.0	92.7	92.6	92.4
41	100	97.2	94.7	92.6	90.8	89.2	87.8	86.6	86.2	86.2	86.2	86.2
42	100	97.2	94.7	92.6	90.8	89.2	87.8	86.6	86.2	86.2	86.2	86.2
43	90.1	87.9	85.8	84.0	82.3	80.6	79.1	77.6	76.2	...	...	...
44	144	143	142	141	141	140	139	138	136	134	131	128
45	144	143	142	141	141	140	139	138	136	134	131	128
46	144	143	142	141	141	140	139	138	136	134	131	128
47	144	143	142	141	141	140	139	138	136	134	131	128
48	112	112	112	112	112	112	112	112	112	112	112	112
49	112	112	112	112	112	112	112	112	112	112	112	112
50	112	112	112	112	112	112	112	112	112	112	112	112
51	112	112	112	112	112	112	112	112	112	112	112	112
52	112	112	112	112	112	112	112	112	112	112	112	112
53	112	112	112	112	112	112	112	112	112	112	112	112
54	112	112	112	112	112	112	112	112	112	112	112	112
55	112	112	112	112	112	112	112	112	112	112	112	112
56	99.9	97.2	94.7	92.6	90.8	89.2	87.8	86.6	85.6	84.7	84.0	83.2
57	90.1	87.9	85.8	84.0	82.3	80.6	79.1	77.6	76.2	74.8	73.4	72.1
58	104	102	99.9	98.0	96.4	95.2	94.2	93.5	93.0	92.7	92.6	92.4
59	92.8	90.3	88.1	86.2	84.6	83.3	82.2	81.2	80.4	79.7	79.0	78.4
60	138	138	138	138	138	138	138	138	138	138	138	138
61	138	138	138	138	138	138	138	138	138	138	138	138
62	138	138	138	138	138	138	138	138	138	138	138	138
63	138	138	138	138	138	138	138	138	138	138	138	138
64	138	138	138	138	138	138	138	138	138	138	138	138
65	138	138	138	138	138	138	138	138	138	138	138	138
66	138	138	138	138	138	138	138	138	138	138	138	138
67	138	138	138	138	138	138	138	138	138	138	138	138
68	147	147	147	147	147	147	...	...	...	...	...	...

Copyright © 2015 by the American Society of Mechanical Engineers.
No reproduction may be made of this material without written consent of ASME.

Table A-2M Design Stress Values for Bolting Materials (Metric) (Cont'd)

Numbers in Parentheses Refer to Notes for Appendix A Tables; Specifications Are ASTM Unless Otherwise Indicated

	Allowable Stress, *S*, MPa, at Metal Temperature, °C [Note (1)]											
Line No.	550	575	600	625	650	675	700	725	750	775	800	825
35	86.2	...	...	...	...	...	...	...	...	...	...	...
36	86.2	...	...	...	...	...	...	...	...	...	...	...
37	86.2	...	...	...	...	...	...	...	...	...	...	...
38	86.2	...	...	...	...	...	...	...	...	...	...	...
39	92.2	...	...	...	...	...	...	...	...	...	...	...
40	92.2	...	...	...	...	...	...	...	...	...	...	...
41	86.2	...	...	...	...	...	...	...	...	...	...	...
42	86.2	...	...	...	...	...	...	...	...	...	...	...
43	...	...	...	...	...	...	...	...	...	...	...	...
44	124	...	...	...	...	...	...	...	...	...	...	...
45	124	...	...	...	...	...	...	...	...	...	...	...
46	124	...	...	...	...	...	...	...	...	...	...	...
47	124	...	...	...	...	...	...	...	...	...	...	...
48	112	...	...	...	...	...	...	...	...	...	...	...
49	112	...	...	...	...	...	...	...	...	...	...	...
50	112	...	...	...	...	...	...	...	...	...	...	...
51	112	...	...	...	...	...	...	...	...	...	...	...
52	112	...	...	...	...	...	...	...	...	...	...	...
53	112	...	...	...	...	...	...	...	...	...	...	...
54	112	...	...	...	...	...	...	...	...	...	...	...
55	112	...	...	...	...	...	...	...	...	...	...	...
56	82.4	59.2	44.0	32.9	24.5	18.3	12.5	8.5	6.2	4.3	2.8	1.7
57	70.7	69.4	63.8	51.6	41.6	32.9	26.5	21.3	17.2	14.1	11.2	8.8
58	92.2	75.9	57.2	40.2	30.3	23.2	16.2	11.4	9.0	7.1	5.9	5.3
59	77.7	76.9	75.9	65.0	50.5	39.2	30.4	23.6	18.4	14.3	11.1	8.6
60	138	...	...	...	...	...	...	...	...	...	...	...
61	138	...	...	...	...	...	...	...	...	...	...	...
62	138	...	...	...	...	...	...	...	...	...	...	...
63	138	...	...	...	...	...	...	...	...	...	...	...
64	138	...	...	...	...	...	...	...	...	...	...	...
65	138	...	...	...	...	...	...	...	...	...	...	...
66	138	...	...	...	...	...	...	...	...	...	...	...
67	138	...	...	...	...	...	...	...	...	...	...	...
68	...	...	...	...	...	...	...	...	...	...	...	...

Copyright © 2015 by the American Society of Mechanical Engineers.
No reproduction may be made of this material without written consent of ASME.

Table A-2M Design Stress Values for Bolting Materials (Metric) (Cont'd)

Numbers in Parentheses Refer to Notes for Appendix A Tables; Specifications Are ASTM Unless Otherwise Indicated

Line No.	Nominal Composition	Product Form	Spec. No.	Type/ Grade	UNS No.	Class/ Condition/ Temper	Size Range, Dia., mm	Notes
69	13Cr	Bolts	A193	B6	S41000	. . .	≤ 100	(15)(35)
70	14Cr–24Ni	Bolts	A453	660	. . .	A	. . .	(15)(35)
71	14Cr–24Ni	Bolts	A453	660	. . .	B	. . .	(15)(35)
72	16Cr–12Ni–2Mo	Bolts	A193	B8M	S31600	2	≤ 19	(15)(60)
73	16Cr–12Ni–2Mo	Bolts	A320	B8M	S31600	2	≤ 19	(15)(60)
74	18Cr–10Ni–Cb	Bolts	A193	B8C	. . .	2	≤ 19	(15)(60)
75	18Cr–10Ni–Cb	Bolts	A320	B8C	S34700	2	≤ 19	(15)(60)
76	18Cr–8Ni	Bolts	A193	B8	S30400	2	≤ 19	(15)(60)
77	18Cr–8Ni	Bolts	A320	B8	S30400	2	≤ 19	(15)(60)
78	18Cr–10Ni–Ti	Bolts	A193	B8T	S32100	2	≤ 19	(15)(60)
79	18Cr–10Ni–Ti	Bolts	A320	B8T	S32100	2	≤ 19	(15)(60)
80	12Cr	Bolts	A437	B4B	S42225	. . .	. . .	(35)
81	12Cr	Nuts	A194	6	S41000	. . .	. . .	(35)(42)
82	18Cr–9Ni	Nuts	A194	8FA	S30300	. . .	. . .	(42)
83	16Cr–12Ni–2Mo	Nuts	A194	8MA	S31600	. . .	. . .	(42)
84	18Cr–10Ni–Ti	Nuts	A194	8TA	S32100	. . .	. . .	(42)
85	18Cr–8Ni	Nuts	A194	8	S30400	. . .	. . .	(42)
86	18Cr–8Ni	Nuts	A194	8A	S30400	. . .	. . .	(42)
87	18Cr–10Ni–Cb	Nuts	A194	8CA	S34700	. . .	. . .	(42)
88	Naval brass	Bolts	B21	. . .	C46400	O60	. . .	(8f)
89	Naval brass	Bolts	B21	. . .	C48200	O60	. . .	(8f)
90	Naval brass	Bolts	B21	. . .	C48500	O60	. . .	(8f)
91	Cu	Bolts	B187	. . .	C10200	O60	. . .	(8f)
92	Cu	Bolts	B187	. . .	C11000	O60	. . .	(8f)
93	Cu	Bolts	B187	. . .	C12000	O60	. . .	(8f)
94	Cu	Bolts	B187	. . .	C12200	O60	. . .	(8f)
95	Cu–Si	Bolts	B98	. . .	C65100	O60	. . .	(8f)(52)
96	Cu–Si	Bolts	B98	. . .	C65500	O60	. . .	(8f)(52)
97	Cu–Si	Bolts	B98	. . .	C66100	O60	. . .	(8f)(52)
98	Cu–Si	Bolts	B98	. . .	C65500	H01	. . .	(8f)
99	Cu–Si	Bolts	B98	. . .	C66100	H01	. . .	(8f)
100	Cu–Si	Bolts	B98	. . .	C65500	H02	≤ 50	. . .
101	Cu–Si	Bolts	B98	. . .	C66100	H02	≤ 50	. . .
102	Cu–Si	Bolts	B98	. . .	C65100	H06	> 25, ≤ 38	. . .
103	Cu–Si	Bolts	B98	. . .	C65100	H06	> 13, ≤ 25	. . .
104	Cu–Si	Bolts	B98	. . .	C65100	H06	≤ 13	. . .

Copyright © 2015 by the American Society of Mechanical Engineers.
No reproduction may be made of this material without written consent of ASME.

Table A-2M Design Stress Values for Bolting Materials (Metric) (Cont'd) (14)

Numbers in Parentheses Refer to Notes for Appendix A Tables; Specifications Are ASTM Unless Otherwise Indicated

					Allowable Stress, *S*, MPa, at Metal Temperature, °C [Note (1)]							
Line No.	Min. Temp., °C (6)	Min. Tensile Strength, MPa	Min. Yield Strength, MPa	Max. Use Temp., °C	Min. Temp. to 40	65	100	125	150	175	200	225
69	−30	758	586	482	147	147	147	147	147	147	147	147
70	−30	896	586	538	155	155	155	155	155	155	155	154
71	−30	896	586	538	155	155	155	155	155	155	155	154
72	−200	758	655	538	152	152	152	152	152	152	152	152
73	−200	758	655	538	152	152	152	152	152	152	152	152
74	−200	862	689	538	172	172	172	172	172	172	172	172
75	−200	862	689	538	172	172	172	172	172	172	172	172
76	−200	862	689	538	172	172	172	172	172	172	172	172
77	−200	862	689	538	172	172	172	172	172	172	172	172
78	−200	862	689	538	172	172	172	172	172	172	172	172
79	−200	862	689	538	172	172	172	172	172	172	172	172
80	−30	1000	724	343	181	181	181	181	181	181	181	181
81	−30	...	...	40	...	...	...	...	...	...	...	...
82	−30	...	...	40	...	...	...	...	...	...	...	...
83	−200	...	...	40	...	...	...	...	...	...	...	...
84	−200	...	...	40	...	...	...	...	...	...	...	...
85	−255	...	...	40	...	...	...	...	...	...	...	...
86	−255	...	...	40	...	...	...	...	...	...	...	...
87	−255	...	...	40	...	...	...	...	...	...	...	...
88	−200	345	138	149	86.2	86.2	86.2	86.2	86.2	...	...	...
89	−200	345	138	149	86.2	86.2	86.2	86.2	86.2	...	...	...
90	−200	345	138	149	86.2	86.2	86.2	86.2	86.2	...	...	...
91	−200	207	69	149	46.0	38.8	37.2	36.5	34.2	...	...	...
92	−200	207	69	149	46.0	38.8	37.2	36.5	34.2	...	...	...
93	−200	207	69	149	46.0	38.8	37.2	36.5	34.2	...	...	...
94	−200	207	69	149	46.0	38.8	37.2	36.5	34.2	...	...	...
95	−200	276	83	149	55.2	55.2	55.2	54.0	48.3	...	...	...
96	−200	359	103	149	68.9	68.9	68.9	68.9	68.8	...	...	...
97	−200	359	103	149	68.9	68.9	68.9	68.9	68.8	...	...	...
98	−200	379	165	149	68.9	68.9	68.9	68.9	68.8	...	...	...
99	−200	379	165	149	68.9	68.9	68.9	68.9	68.8	...	...	...
100	−200	483	262	149	68.9	68.9	68.9	68.9	68.8	...	...	...
101	−200	483	262	149	68.9	68.9	68.9	68.9	68.8	...	...	...
102	−200	517	276	149	68.9	68.9	68.9	68.9	68.9	...	...	...
103	−200	517	310	149	77.6	77.6	77.6	77.6	77.6	...	...	...
104	−200	586	379	149	94.8	94.8	94.8	94.8	94.8	...	...	...

Copyright © 2015 by the American Society of Mechanical Engineers.
No reproduction may be made of this material without written consent of ASME.

Table A-2M Design Stress Values for Bolting Materials (Metric) (Cont'd)

Numbers in Parentheses Refer to Notes for Appendix A Tables; Specifications Are ASTM Unless Otherwise Indicated

	Allowable Stress, *S*, MPa, at Metal Temperature, °C [Note (1)]											
Line No.	250	275	300	325	350	375	400	425	450	475	500	525
69	147	147	147	147	147	147	147	147	147	141	133	...
70	153	152	150	149	148	147	147	147	147	147	147	147
71	153	152	150	149	148	147	147	147	147	147	147	147
72	152	152	152	152	152	152	152	152	152	152	152	152
73	152	152	152	152	152	152	152	152	152	152	152	152
74	172	171	170	170	169	169	169	169	169	168	167	166
75	172	171	170	170	169	169	169	169	169	168	167	166
76	172	172	172	172	172	172	172	172	172	172	172	168
77	172	172	172	172	172	172	172	172	172	172	172	168
78	172	172	172	172	172	172	172	172	172	172	172	172
79	172	172	172	172	172	172	172	172	172	172	172	172
80	181	181	181	181	181	...	...	...	...	...	...	...
81	...	...	...	...	...	...	...	...	...	...	...	...
82	...	...	...	...	...	...	...	...	...	...	...	...
83	...	...	...	...	...	...	...	...	...	...	...	...
84	...	...	...	...	...	...	...	...	...	...	...	...
85	...	...	...	...	...	...	...	...	...	...	...	...
86	...	...	...	...	...	...	...	...	...	...	...	...
87	...	...	...	...	...	...	...	...	...	...	...	...
88	...	...	...	...	...	...	...	...	...	...	...	...
89	...	...	...	...	...	...	...	...	...	...	...	...
90	...	...	...	...	...	...	...	...	...	...	...	...
91	...	...	...	...	...	...	...	...	...	...	...	...
92	...	...	...	...	...	...	...	...	...	...	...	...
93	...	...	...	...	...	...	...	...	...	...	...	...
94	...	...	...	...	...	...	...	...	...	...	...	...
95	...	...	...	...	...	...	...	...	...	...	...	...
96	...	...	...	...	...	...	...	...	...	...	...	...
97	...	...	...	...	...	...	...	...	...	...	...	...
98	...	...	...	...	...	...	...	...	...	...	...	...
99	...	...	...	...	...	...	...	...	...	...	...	...
100	...	...	...	...	...	...	...	...	...	...	...	...
101	...	...	...	...	...	...	...	...	...	...	...	...
102	...	...	...	...	...	...	...	...	...	...	...	...
103	...	...	...	...	...	...	...	...	...	...	...	...
104	...	...	...	...	...	...	...	...	...	...	...	...

Copyright © 2015 by the American Society of Mechanical Engineers.
No reproduction may be made of this material without written consent of ASME.

Table A-2M Design Stress Values for Bolting Materials (Metric) (Cont'd)

Numbers in Parentheses Refer to Notes for Appendix A Tables; Specifications Are ASTM Unless Otherwise Indicated

	Allowable Stress, *S*, MPa, at Metal Temperature, °C [Note (1)]											
Line No.	550	575	600	625	650	675	700	725	750	775	800	825
69	...	...	...	...	...	...	...	...	...	...	...	...
70	147	...	...	...	...	...	...	...	...	...	...	...
71	147	...	...	...	...	...	...	...	...	...	...	...
72	152	...	...	...	...	...	...	...	...	...	...	...
73	152	...	...	...	...	...	...	...	...	...	...	...
74	164	...	...	...	...	...	...	...	...	...	...	...
75	164	...	...	...	...	...	...	...	...	...	...	...
76	162	...	...	...	...	...	...	...	...	...	...	...
77	162	...	...	...	...	...	...	...	...	...	...	...
78	172	...	...	...	...	...	...	...	...	...	...	...
79	172	...	...	...	...	...	...	...	...	...	...	...
80	...	...	...	...	...	...	...	...	...	...	...	...
81	...	...	...	...	...	...	...	...	...	...	...	...
82	...	...	...	...	...	...	...	...	...	...	...	...
83	...	...	...	...	...	...	...	...	...	...	...	...
84	...	...	...	...	...	...	...	...	...	...	...	...
85	...	...	...	...	...	...	...	...	...	...	...	...
86	...	...	...	...	...	...	...	...	...	...	...	...
87	...	...	...	...	...	...	...	...	...	...	...	...
88	...	...	...	...	...	...	...	...	...	...	...	...
89	...	...	...	...	...	...	...	...	...	...	...	...
90	...	...	...	...	...	...	...	...	...	...	...	...
91	...	...	...	...	...	...	...	...	...	...	...	...
92	...	...	...	...	...	...	...	...	...	...	...	...
93	...	...	...	...	...	...	...	...	...	...	...	...
94	...	...	...	...	...	...	...	...	...	...	...	...
95	...	...	...	...	...	...	...	...	...	...	...	...
96	...	...	...	...	...	...	...	...	...	...	...	...
97	...	...	...	...	...	...	...	...	...	...	...	...
98	...	...	...	...	...	...	...	...	...	...	...	...
99	...	...	...	...	...	...	...	...	...	...	...	...
100	...	...	...	...	...	...	...	...	...	...	...	...
101	...	...	...	...	...	...	...	...	...	...	...	...
102	...	...	...	...	...	...	...	...	...	...	...	...
103	...	...	...	...	...	...	...	...	...	...	...	...
104	...	...	...	...	...	...	...	...	...	...	...	...

Copyright © 2015 by the American Society of Mechanical Engineers.
No reproduction may be made of this material without written consent of ASME.

Table A-2M Design Stress Values for Bolting Materials (Metric) (Cont'd)

Numbers in Parentheses Refer to Notes for Appendix A Tables; Specifications Are ASTM Unless Otherwise Indicated

Line No.	Nominal Composition	Product Form	Spec. No.	Type/ Grade	UNS No.	Class/ Condition/ Temper	Size Range, Dia., mm	Notes
105	Al–Si–bronze	Bolts	B150	. . .	C64200	HR50	> 25, ≤ 50	. . .
106	Al–Si–bronze	Bolts	B150	. . .	C64200	HR50	> 13, ≤ 25	. . .
107	Al–Si–bronze	Bolts	B150	. . .	C64200	HR50	≤ 13	. . .
108	Al–bronze	Bolts	B150	. . .	C61400	HR50	> 25, ≤ 50	. . .
109	Al–bronze	Bolts	B150	. . .	C61400	HR50	> 13, ≤ 25	. . .
110	Al–bronze	Bolts	B150	. . .	C61400	HR50	≤ 13	. . .
111	Al–bronze	Bolts	B150	. . .	C63000	HR50	> 50, ≤ 75	. . .
112	Al–bronze	Bolts	B150	. . .	C63000	M20	> 75, ≤ 100	. . .
113	Al–bronze	Bolts	B150	. . .	C63000	HR50	> 25, ≤ 50	. . .
114	Al–bronze	Bolts	B150	. . .	C63000	HR50	> 13, ≤ 25	. . .
115	Low C–Ni	Bolts	B160	. . .	N02201	Hot fin./ann.	. . .	(8f)
116	Ni	Bolts	B160	. . .	N02200	Hot fin.	. . .	(8f)
117	Ni	Bolts	B160	. . .	N02200	Annealed	. . .	(8f)
118	Ni	Bolts	B160	. . .	N02200	Cold drawn	. . .	. . .
119	Ni–Cu	Bolts	B164	. . .	N04400	C.D./str. rel.	. . .	(54)
120	Ni–Cu	Bolts	B164	. . .	N04405	Cold drawn	. . .	(54)
121	Ni–Cu	Bolts	B164	. . .	N04400	Cold drawn	. . .	(54)
122	Ni–Cu	Bolts	B164	. . .	N04400	Annealed	. . .	(8f)
123	Ni–Cu	Bolts	B164	. . .	N04405	Annealed	. . .	(8f)
124	Ni–Cu	Rod	B164	. . .	N04405	Hot fin.	≤ 75	. . .
125	Ni–Cu	Hex	B164	. . .	N04400	Hot fin.	≥ 54, ≤ 100	(8f)
126	Ni–Cu	All except hex	B164	. . .	N04400	Hot fin.	> 54	. . .
127	Ni–Cr–Fe	Rod	B166	. . .	N06600	Cold drawn	≤ 75	(41)(54)
128	Ni–Cr–Fe	Rod	B166	. . .	N06600	Hot fin.	≤ 75	. . .
129	Ni–Cr–Fe	Bolts	B166	. . .	N06600	Annealed	. . .	. . .
130	Ni–Cr–Fe	Rod	B166	. . .	N06600	Hot fin.	> 75	. . .
131	Ni–Mo	Bolts	B335	. . .	N10001	Annealed	. . .	. . .
132	Ni–Mo–Cr	Bolts	B574	. . .	N10276	Sol. ann.	. . .	. . .
133	Aluminum alloy	Bolts	B211	6061	A96061	T6, T651 wld.	≥ 3, ≤ 200	(8f)(43)(63)
134	Aluminum alloy	Bolts	B211	6061	A96061	T6, T651	≥ 3, ≤ 200	(43)(63)
135	Aluminum alloy	Bolts	B211	2024	A92024	T4	> 165, ≤ 200	(43)(63)
136	Aluminum alloy	Bolts	B211	2024	A92024	T4	> 114, ≤ 165	(43)(63)
137	Aluminum alloy	Bolts	B211	2024	A92024	T4	> 13, ≤ 114	(43)(63)
138	Aluminum alloy	Bolts	B211	2024	A92024	T4	≥ 3, < 13	(43)(63)
139	Aluminum alloy	Bolts	B211	2014	A92014	T6, T651	≥ 3, ≤ 200	(43)(63)

Copyright © 2015 by the American Society of Mechanical Engineers.
No reproduction may be made of this material without written consent of ASME.

Table A-2M Design Stress Values for Bolting Materials (Metric) (Cont'd) (14)

Numbers in Parentheses Refer to Notes for Appendix A Tables; Specifications Are ASTM Unless Otherwise Indicated

					Allowable Stress, *S*, MPa, at Metal Temperature, °C [Note (1)]							
Line No.	Min. Temp., °C (6)	Min. Tensile Strength, MPa	Min. Yield Strength, MPa	Max. Use Temp., °C	Min. Temp. to 40	65	100	125	150	175	200	225
105	−200	552	290	316	115	100	95.2	93.6	92.1	89.1	76.9	57.7
106	−200	586	290	316	115	100	95.2	93.6	92.1	89.1	76.9	57.7
107	−200	621	290	316	115	100	95.2	93.6	92.1	89.1	76.9	57.7
108	−200	483	221	260	121	121	121	121	121	121	119	115
109	−200	517	241	260	121	121	121	121	121	121	119	115
110	−200	552	276	260	124	124	124	124	124	124	122	118
111	−200	586	293	371	147	147	147	146	145	144	143	140
112	−200	586	293	371	138	137	134	133	132	131	130	128
113	−200	621	310	371	155	155	155	155	155	155	155	153
114	−200	689	345	371	155	155	155	155	155	155	155	153
115	−200	345	69	649	46.0	44.8	44.0	43.6	43.3	43.1	43.0	43.0
116	−200	414	103	316	68.9	68.9	68.9	68.9	68.9	68.9	68.9	68.9
117	−200	379	103	316	68.9	68.9	68.9	68.9	68.9	68.9	68.9	68.9
118	−200	448	276	316	68.9	68.9	68.9	68.9	68.9	68.9	68.9	68.9
119	−200	579	345	316	115	106	99.7	96.2	93.6	91.9	90.9	90.4
120	−200	586	345	260	115	106	99.7	96.2	93.6	91.9	90.9	90.4
121	−200	586	379	260	115	106	99.7	96.2	94.8	94.8	94.8	94.8
122	−200	483	172	482	115	106	99.7	96.2	93.6	91.9	90.9	90.4
123	−200	483	172	482	115	106	99.7	96.2	93.6	91.9	90.9	90.4
124	−200	517	241	482	115	106	99.7	96.2	93.6	91.9	90.9	90.4
125	−200	517	207	482	115	106	99.7	96.2	93.6	91.9	90.9	90.4
126	−200	552	276	482	115	106	99.7	96.2	93.6	91.9	90.9	90.4
127	−200	724	552	260	138	138	138	138	138	138	138	138
128	−200	621	276	649	115	112	109	107	105	103	101	99.0
129	−200	552	241	649	115	112	109	107	105	103	101	99.0
130	−200	586	241	649	115	112	109	107	105	103	101	99.0
131	−200	689	317	427	172	172	172	172	172	171	170	169
132	−200	689	283	538	172	172	170	164	158	153	148	143
133	−270	165	. . .	204	33.1	33.1	33.1	33.1	33.1	33.1	26.4	16.1
134	−270	290	241	204	57.9	57.9	57.9	57.9	57.9	47.3	34.9	21.1
135	−270	400	262	204	65.5	65.5	65.5	65.5	65.5	43.1	29.3	29.3
136	−270	427	276	204	68.9	68.9	68.9	68.9	68.9	46.1	31.3	31.3
137	−270	427	290	204	72.4	72.4	72.4	72.4	70.2	46.2	31.2	31.2
138	−270	427	310	204	77.6	77.6	77.6	77.6	70.2	46.2	31.2	31.2
139	−270	448	379	204	89.6	89.6	89.6	89.6	84.2	46.9	26.2	20.2

Copyright © 2015 by the American Society of Mechanical Engineers.
No reproduction may be made of this material without written consent of ASME.

Table A-2M Design Stress Values for Bolting Materials (Metric) (Cont'd)

Numbers in Parentheses Refer to Notes for Appendix A Tables; Specifications Are ASTM Unless Otherwise Indicated

	Allowable Stress, *S*, MPa, at Metal Temperature, °C [Note (1)]											
Line No.	250	275	300	325	350	375	400	425	450	475	500	525
105	40.9	24.1	14.5	10.3	...	...	...	...	...	...	...	...
106	40.9	24.1	14.5	10.3	...	...	...	...	...	...	...	...
107	40.9	24.1	14.5	10.3	...	...	...	...	...	...	...	...
108	111	109	...	...	...	...	...	...	...	...	...	...
109	111	109	...	...	...	...	...	...	...	...	...	...
110	115	112	...	...	...	...	...	...	...	...	...	...
111	136	126	97.2	73.9	54.4	39.3	...	...	...	...	...	...
112	124	117	97.2	73.9	54.4	39.3	...	...	...	...	...	...
113	148	126	97.2	73.9	54.4	39.3	...	...	...	...	...	...
114	148	126	97.2	73.9	54.4	39.3	...	...	...	...	...	...
115	43.0	43.0	43.0	43.0	42.9	42.7	42.2	41.6	40.7	33.1	27.4	22.8
116	68.9	68.9	68.9	68.9	...	...	...	...	...	...	...	...
117	68.9	68.9	68.9	68.9	...	...	...	...	...	...	...	...
118	68.9	68.9	68.9	68.9	...	...	...	...	...	...	...	...
119	90.4	90.4	90.4	90.4	...	...	...	...	...	...	...	...
120	90.4	90.4	...	...	...	...	...	...	...	...	...	...
121	94.8	94.8	...	...	...	...	...	...	...	...	...	...
122	90.4	90.4	90.4	90.4	90.4	89.8	89.0	88.0	87.0	86.4	75.6	...
123	90.4	90.4	90.4	90.4	90.4	89.8	89.0	88.0	87.0	86.4	75.6	...
124	90.4	90.4	90.4	90.4	90.4	89.8	89.0	88.0	87.0	86.4	75.6	...
125	90.4	90.4	90.4	90.4	90.4	89.8	89.0	88.0	87.0	86.4	75.6	...
126	90.4	90.4	90.4	90.4	90.4	89.8	89.0	88.0	87.0	86.4	75.6	...
127	138	138	...	...	...	...	...	...	...	...	...	...
128	97.3	95.6	94.0	92.6	91.2	89.9	88.7	87.7	86.7	85.8	75.6	58.4
129	97.3	95.6	94.0	92.6	91.2	89.9	88.7	87.7	86.7	85.8	75.6	58.4
130	97.3	95.6	94.0	92.6	91.2	89.9	88.7	87.7	86.7	85.8	75.6	58.4
131	168	166	164	162	160	158	157	156	155	...	...	...
132	139	135	131	128	125	122	120	118	117	115	115	114
133	...	...	...	...	...	...	...	...	...	...	...	...
134	...	...	...	...	...	...	...	...	...	...	...	...
135	...	...	...	...	...	...	...	...	...	...	...	...
136	...	...	...	...	...	...	...	...	...	...	...	...
137	...	...	...	...	...	...	...	...	...	...	...	...
138	...	...	...	...	...	...	...	...	...	...	...	...
139	...	...	...	...	...	...	...	...	...	...	...	...

Copyright © 2015 by the American Society of Mechanical Engineers.
No reproduction may be made of this material without written consent of ASME.

Table A-2M Design Stress Values for Bolting Materials (Metric) (Cont'd)

Numbers in Parentheses Refer to Notes for Appendix A Tables; Specifications Are ASTM Unless Otherwise Indicated

	Allowable Stress, *S*, MPa, at Metal Temperature, °C [Note (1)]											
Line No.	550	575	600	625	650	675	700	725	750	775	800	825
105	...	...	...	...	...	...	...	...	...	...	...	...
106	...	...	...	...	...	...	...	...	...	...	...	...
107	...	...	...	...	...	...	...	...	...	...	...	...
108	...	...	...	...	...	...	...	...	...	...	...	...
109	...	...	...	...	...	...	...	...	...	...	...	...
110	...	...	...	...	...	...	...	...	...	...	...	...
111	...	...	...	...	...	...	...	...	...	...	...	...
112	...	...	...	...	...	...	...	...	...	...	...	...
113	...	...	...	...	...	...	...	...	...	...	...	...
114	...	...	...	...	...	...	...	...	...	...	...	...
115	18.7	15.6	12.9	10.0	8.2	...	...	...	...	...	...	...
116	...	...	...	...	...	...	...	...	...	...	...	...
117	...	...	...	...	...	...	...	...	...	...	...	...
118	...	...	...	...	...	...	...	...	...	...	...	...
119	...	...	...	...	...	...	...	...	...	...	...	...
120	...	...	...	...	...	...	...	...	...	...	...	...
121	...	...	...	...	...	...	...	...	...	...	...	...
122	...	...	...	...	...	...	...	...	...	...	...	...
123	...	...	...	...	...	...	...	...	...	...	...	...
124	...	...	...	...	...	...	...	...	...	...	...	...
125	...	...	...	...	...	...	...	...	...	...	...	...
126	...	...	...	...	...	...	...	...	...	...	...	...
127	...	...	...	...	...	...	...	...	...	...	...	...
128	39.7	27.0	19.2	15.0	13.7	...	...	...	...	...	...	...
129	39.7	27.0	19.2	15.0	13.7	...	...	...	...	...	...	...
130	39.7	27.0	19.2	15.0	13.7	...	...	...	...	...	...	...
131	...	...	...	...	...	...	...	...	...	...	...	...
132	114	...	...	...	...	...	...	...	...	...	...	...
133	...	...	...	...	...	...	...	...	...	...	...	...
134	...	...	...	...	...	...	...	...	...	...	...	...
135	...	...	...	...	...	...	...	...	...	...	...	...
136	...	...	...	...	...	...	...	...	...	...	...	...
137	...	...	...	...	...	...	...	...	...	...	...	...
138	...	...	...	...	...	...	...	...	...	...	...	...
139	...	...	...	...	...	...	...	...	...	...	...	...

Copyright © 2015 by the American Society of Mechanical Engineers.
No reproduction may be made of this material without written consent of ASME.

APPENDIX B
STRESS TABLES AND ALLOWABLE PRESSURE TABLES FOR NONMETALS

The data and Notes in Appendix B are requirements of this Code.

Copyright © 2015 by the American Society of Mechanical Engineers.
No reproduction may be made of this material without written consent of ASME.

Specification Index for Appendix B

Spec. No.	Title [Note (1)]
ASTM	
C361	Reinforced Concrete Low-Head Pressure Pipe
C582	Contact-Molded Reinforced Thermosetting Plastic (RTP) Laminates for Corrosion Resistant Equipment
C599	Process Glass Pipe and Fittings
D1785	PVC Plastic Pipe, Schedules 40, 80, and 120
D2239	PE Plastic Pipe (SIDR-PR) Based on Controlled Inside Diameter
D2241	PVC Plastic Pressure-Rated Pipe (SDR Series)
D2447	PE Plastic Pipe, Schedules 40 and 80, Based on Outside Diameter
D2513	Thermoplastic Gas Pressure Pipe, Tubing and Fittings
D2517	Reinforced Epoxy Resin Gas Pressure Pipe and Fittings
D2662	PB Plastic Pipe (SDR-PR)
D2666	PB Plastic Tubing
D2672	Joints for IPS PVC Pipe Using Solvent Cement
D2737	PE Plastic Tubing
D2846	CPVC Plastic Hot- and Cold-Water Distribution Systems
D2996	Filament-Wound Fiberglass RTR Pipe [Note (2)]
D2997	Centrifugally Cast RTR Pipe [Note (2)]
D3000	PB Plastic Pipe (SDR-PR) Based on Outside Diameter
D3035	PE Plastic Pipe (DR-PR) Based on Controlled Outside Diameter
D3309	PB Plastic Hot- and Cold-Water Distribution Systems
D3517	Fiberglass RTR Pressure Pipe [Note (2)]
D3754	Fiberglass RTR Sewer and Industrial Pressure Pipe [Note (2)]
F441	CPVC Plastic Pipe, Schedules 40 and 80
F442	CPVC Plastic Pipe (SDR-PR)
F2389	Pressure-Rated Polypropylene (PP) Piping Systems
AWWA	
C300	Reinforced Concrete Pressure Pipe, Steel Cylinder Type, for Water and Other Liquids
C301	Prestressed Concrete Pressure, Pipe Steel Cylinder Type, for Water and Other Liquids
C302	Reinforced Concrete Pressure Pipe, Noncylinder Type
C950	Fiberglass Pressure Pipe

GENERAL NOTE: It is not practical to refer to a specific edition of each standard throughout the Code text. Instead, the approved edition references, along with the names and addresses of the sponsoring organizations, are shown in Appendix E.

NOTES:

(1) For names of plastics identified only by abbreviation, see para. A326.4.

(2) The term *fiberglass RTR* takes the place of the ASTM designation *"fiberglass" (glass-fiber-reinforced thermosetting resin).*

Copyright © 2015 by the American Society of Mechanical Engineers.
No reproduction may be made of this material without written consent of ASME.

NOTES FOR APPENDIX B TABLES

NOTES:

(1) These recommended limits are for low pressure applications with water and other fluids that do not significantly affect the properties of the thermoplastic. The upper temperature limits are reduced at higher pressures, depending on the combination of fluid and expected service life. Lower temperature limits are affected more by the environment, safeguarding, and installation conditions than by strength.

(2) These recommended limits apply only to materials listed. Manufacturers should be consulted for temperature limits on specific types and kinds of materials not listed.

(3) Use these hydrostatic design stress (HDS) values at all lower temperatures.

(4) The intent of listing in this Table is to include all the types, grades, classes, and hydrostatic design bases in the listed specifications.

Copyright © 2015 by the American Society of Mechanical Engineers.
No reproduction may be made of this material without written consent of ASME.

Table B-1 Hydrostatic Design Stresses (HDS) and Recommended Temperature Limits for Thermoplastic Pipe

ASTM Spec. No.	Pipe Designation	Material Designation	Cell Class	Recommended Temperature Limits [Notes (1), (2)] Minimum °C	Minimum °F	Maximum °C	Maximum °F	Hydrostatic Design Stress at 23°C [Note (3)] MPa	73°F [Note (3)] ksi	38°C MPa	100°F ksi	82°C MPa	180°F ksi
. . .	PR	ABS	43232	−40	−40	80	176	. . .	. . .	. . .	. . .	. . .	. . .
D2846	SDR11	CPVC4120	23447	. . .	. . .	82	180	13.8	2.0	. . .	. . .	3.45	0.5
F441	Sch. 40	CPVC4120	23447	23	73	93.3	200	13.8	2.0	. . .	. . .	3.45	0.5
F441	Sch. 80	CPVC4120	23447	23	73	93.3	200	13.8	2.0	. . .	. . .	3.45	0.5
F442	SDR-PR	CPVC4120	23447	23	73	93.3	200	13.8	2.0	11.3	1.64	3.45	0.5
D3309	SDR11	PB2110	. . .	23	73	93.3	200	6.9	1.0	. . .	. . .	3.45	0.5
D2239	SIDR-PR	PE1404	. . .	23	73	. . .	. . .	2.76	0.40	. . .	. . .	. . .	. . .
D2239	SIDR-PR	PE2305	. . .	23	73	. . .	. . .	3.45	0.50	. . .	. . .	. . .	. . .
D2239	SIDR-PR	PE2306	. . .	23	73	. . .	. . .	4.34	0.63	. . .	. . .	. . .	. . .
D2239	SIDR-PR	PE2406	. . .	23	73	. . .	. . .	4.34	0.63	. . .	. . .	. . .	. . .
D2239	SIDR-PR	PE3306	. . .	23	73	. . .	. . .	4.34	0.63	. . .	. . .	. . .	. . .
D2239	SIDR-PR	PE3406	. . .	23	73	. . .	. . .	4.34	0.63	. . .	. . .	. . .	. . .
D2239	SIDR-PR	PE3408	. . .	23	73	. . .	. . .	5.51	0.80	. . .	. . .	. . .	. . .
D2447	Sch. 40 and 80	PE1404	. . .	23	73	. . .	. . .	2.76	0.40	. . .	. . .	. . .	. . .
D2447	Sch. 40 and 80	PE2305	. . .	23	73	. . .	. . .	3.45	0.50	. . .	. . .	. . .	. . .
D2447	Sch. 40 and 80	PE2306	. . .	23	73	. . .	. . .	4.34	0.63	. . .	. . .	. . .	. . .
D2447	Sch. 40 and 80	PE2406	. . .	23	73	. . .	. . .	4.34	0.63	. . .	. . .	. . .	. . .
D2447	Sch. 40 and 80	PE3306	. . .	23	73	. . .	. . .	4.34	0.63	. . .	. . .	. . .	. . .
D2447	Sch. 40 and 80	PE3406	. . .	23	73	. . .	. . .	4.34	0.63	. . .	. . .	. . .	. . .
D2737	SDR7.3, SDR9, SDR11	PE2305	. . .	23	73	. . .	. . .	3.45	0.50	. . .	. . .	. . .	. . .
D2737	SDR7.3, SDR9, SDR11	PE2306	. . .	23	73	. . .	. . .	4.34	0.63	. . .	. . .	. . .	. . .
D2737	SDR7.3, SDR9, SDR11	PE2406	. . .	23	73	. . .	. . .	4.34	0.63	. . .	. . .	. . .	. . .
D2737	SDR7.3, SDR9, SDR11	PE3306	. . .	23	73	. . .	. . .	4.34	0.63	. . .	. . .	. . .	. . .
D2737	SDR7.3, SDR9, SDR11	PE3406	. . .	23	73	. . .	. . .	4.34	0.63	. . .	. . .	. . .	. . .
D2737	SDR7.3, SDR9, SDR11	PE3408	. . .	23	73	. . .	. . .	5.51	0.80	. . .	. . .	. . .	. . .
D3035	DR-PR	PE1404	. . .	23	73	. . .	. . .	2.76	0.40	. . .	. . .	. . .	. . .
D3035	DR-PR	PE2606	. . .	23	73	. . .	. . .	4.34	0.63	. . .	. . .	. . .	. . .
D3035	DR-PR	PE2708	. . .	23	73	. . .	. . .	5.51	0.80	. . .	. . .	. . .	. . .
D3035	DR-PR	PE3608	. . .	23	73	. . .	. . .	5.51	0.80	. . .	. . .	. . .	. . .
D3035	DR-PR	PE3708	. . .	23	73	. . .	. . .	5.51	0.80	. . .	. . .	. . .	. . .
D3035	DR-PR	PE3710	. . .	23	73	. . .	. . .	6.89	1.00	. . .	. . .	. . .	. . .
D3035	DR-PR	PE4608	. . .	23	73	. . .	. . .	5.51	0.80	. . .	. . .	. . .	. . .
D3035	DR-PR	PE4708	. . .	23	73	. . .	. . .	5.51	0.80	. . .	. . .	. . .	. . .
D3035	DR-PR	PE4710	. . .	23	73	. . .	. . .	6.89	1.00	. . .	. . .	. . .	. . .
F714	SDR-PR	PE1404	. . .	23	73	. . .	. . .	2.76	0.40	. . .	. . .	. . .	. . .
F714	SDR-PR	PE2606	. . .	23	73	. . .	. . .	4.34	0.63	. . .	. . .	. . .	. . .
F714	SDR-PR	PE2708	. . .	23	73	. . .	. . .	5.51	0.80	. . .	. . .	. . .	. . .
F714	SDR-PR	PE3608	. . .	23	73	. . .	. . .	5.51	0.80	. . .	. . .	. . .	. . .

Copyright © 2015 by the American Society of Mechanical Engineers.
No reproduction may be made of this material without written consent of ASME.

Table B-1 Hydrostatic Design Stresses (HDS) and Recommended Temperature Limits for Thermoplastic Pipe (Cont'd)

ASTM Spec. No.	Pipe Designation	Material Designation	Cell Class	Recommended Temperature Limits [Notes (1), (2)] Minimum °C	Minimum °F	Maximum °C	Maximum °F	Hydrostatic Design Stress at 23°C [Note (3)] MPa	73°F [Note (3)] ksi	38°C MPa	100°F ksi	82°C MPa	180°F ksi
F714	SDR-PR	PE3708	. . .	23	73	. . .	. . .	5.51	0.80	. . .	. . .	. . .	. . .
F714	SDR-PR	PE3710	. . .	23	73	. . .	. . .	6.89	1.00	. . .	. . .	. . .	. . .
F714	SDR-PR	PE4608	. . .	23	73	. . .	. . .	5.51	0.80	. . .	. . .	. . .	. . .
F714	SDR-PR	PE4708	. . .	23	73	. . .	. . .	5.51	0.80	. . .	. . .	. . .	. . .
F714	SDR-PR	PE4710	. . .	23	73	. . .	. . .	6.89	1.00	. . .	. . .	. . .	. . .
F2389	SDR6, SDR7.3, SDR11	PP	. . .	−18	0	99	210	4.34	0.63	3.45	0.50	1.38	0.20
D1785	Sch. 40, 80, 120	PVC1120	12454	23	73	. . .	. . .	13.8	2.00	. . .	. . .	. . .	. . .
D1785	Sch. 40, 80, 120	PVC1220	12454	23	73	. . .	. . .	13.8	2.00	. . .	. . .	. . .	. . .
D1785	Sch. 40, 80, 120	PVC2120	14333	23	73	. . .	. . .	13.8	2.00	. . .	. . .	. . .	. . .
D1785	Sch. 40, 80, 120	PVC2116	14333	23	73	. . .	. . .	11.0	1.60	. . .	. . .	. . .	. . .
D1785	Sch. 40, 80, 120	PVC2112	14333	23	73	. . .	. . .	8.6	1.25	. . .	. . .	. . .	. . .
D1785	Sch. 40, 80, 120	PVC2110	14333	23	73	. . .	. . .	6.9	1.00	. . .	. . .	. . .	. . .
D2241	PR (SDR series)	PVC1120	12454	23	73	. . .	. . .	13.8	2.00	. . .	. . .	. . .	. . .
D2241	PR (SDR series)	PVC1220	12454	23	73	. . .	. . .	13.8	2.00	. . .	. . .	. . .	. . .
D2241	PR (SDR series)	PVC2120	14333	23	73	. . .	. . .	13.8	2.00	. . .	. . .	. . .	. . .
D2241	PR (SDR series)	PVC2116	14333	23	73	. . .	. . .	11.0	1.60	. . .	. . .	. . .	. . .
D2241	PR (SDR series)	PVC2112	14333	23	73	. . .	. . .	8.6	1.25	. . .	. . .	. . .	. . .
D2241	PR (SDR series)	PVC2110	14333	23	73	. . .	. . .	6.9	1.00	. . .	. . .	. . .	. . .

Table B-2 Listed Specifications for Laminated Reinforced Thermosetting Resin Pipe[4]

Spec. No.
ASTM C582

Table B-3 Listed Specifications for Filament Wound and Centrifugally Cast Reinforced Thermosetting Resin and Reinforced Plastic Mortar Pipe[4]

Spec. Nos. (ASTM Except as Noted)		
D2517	D2997	D3754
D2996	D3517	AWWA C950

Copyright © 2015 by the American Society of Mechanical Engineers.
No reproduction may be made of this material without written consent of ASME.

Table B-4 Allowable Pressures and Recommended Temperature Limits for Concrete Pipe

Spec. No.	Material	Class	Allowable Gage Pressure kPa	Allowable Gage Pressure psi	Recommended Temperature Limits [Note (2)] Minimum °C	Minimum °F	Maximum °C	Maximum °F
ASTM C361	Reinforced concrete	25	69	10	. . .	. . .	. . .	. . .
		50	138	20				
		75	205	30				
		100	275	40				
		125	345	50				
AWWA C300	Reinforced concrete	. . .	1 795	260	. . .	. . .	. . .	. . .
AWWA C301	Reinforced concrete	Lined cylinder	1 725	250	. . .	. . .	. . .	. . .
AWWA C301	Reinforced concrete	Embedded cylinder	2 415	350	. . .	. . .	. . .	. . .
AWWA C302	Reinforced concrete	. . .	310	45	. . .	. . .	. . .	. . .

Table B-5 Allowable Pressures and Recommended Temperature Limits for Borosilicate Glass Pipe

ASTM Spec. No.	Material	Size Range DN	Size Range NPS	Allowable Gage Pressure kPa	Allowable Gage Pressure psi	Recommended Temperature Limits [Note (2)] Minimum °C	Minimum °F	Maximum °C	Maximum °F
C599	Borosilicate glass	8–15	¼–½	690	100	. . .	. . .	232	450
		20	¾	515	75				
		25–80	1–3	345	50				
		100	4	240	35				
		150	6	138	20				

Table B-6 Allowable Pressures and Recommended Temperature Limits for PEX-AL-PEX and PE-AL-PE Pipe

ASTM Spec. No.	Material	Size Range mm	Size Range in.	Allowable Gage Pressure kPa	Allowable Gage Pressure psi	Maximum Temperature Limits [Note (2)] °C	°F
F1281	PEX-AL-PEX	9.12–60.75	⅜–2½	1 379	200	23	73.4
				1 103	160	60	140
				862	125	82.2	180
F1282	PE-AL-PE	9.12–60.75	⅜–2½	1 379	200	23	73.4
				1 103	160	60	140
				862	100	82.2	180
F1974	Metal insert fittings for PEX-AL-PEX systems	12.16–25.32	½–1	862	125	82	180
	Metal insert fittings for PE-AL-PE systems	12.16–25.32	½–1	1 103	160	60	140
				862	125	82	180

Copyright © 2015 by the American Society of Mechanical Engineers.
No reproduction may be made of this material without written consent of ASME.

APPENDIX C
PHYSICAL PROPERTIES OF PIPING MATERIALS

(14)

NOTE FOR APPENDIX C TABLES

GENERAL NOTE: Table C-7 containing data in SI units is not included at this time. To convert data in U.S. Customary units to SI metric units

(a) determine the Fahrenheit equivalent of the given Celsius temperature

(b) interpolate in the desired table to calculate the expansion or modulus value in U.S. units

(c) for Table C-6, multiply the value in Msi by 6 895 to obtain the modulus of elasticity in MPa at the given temperature

Copyright © 2015 by the American Society of Mechanical Engineers.
No reproduction may be made of this material without written consent of ASME.

(14)

Table C-1 Thermal Expansion Data

A = Mean Coefficient of Thermal Expansion, 10^{-6}in./in./°F
B = Linear Thermal Expansion, in./100 ft
} in Going From 70°F to Indicated Temperature [Note (1)]

Material	Coef-ficient	Temperature Range 70°F to −325	−150	−50	70	200	300	400	500	600	700	800	900	1,000	1,100	1,200	1,300	1,400
Group 1 carbon and low alloy steels [Note (2)]	*A*	5.5	5.9	6.2	6.4	6.7	6.9	7.1	7.3	7.4	7.6	7.8	7.9	8.1	8.2	8.3	8.4	8.4
	B	−2.6	−1.6	−0.9	0	1.0	1.9	2.8	3.7	4.7	5.7	6.8	7.9	9.0	10.1	11.3	12.4	14.7
Group 2 low alloy steels [Note (3)]	*A*	6.0	6.5	6.7	7.0	7.3	7.4	7.6	7.7	7.8	7.9	8.0	8.1	8.2	8.3	8.4	8.4	8.5
	B	−2.9	−1.7	−1.0	0	1.1	2.0	3.0	4.0	5.0	6.0	7.0	8.1	9.2	10.3	11.4	12.5	13.5
5Cr–1Mo steels	*A*	5.6	6.0	6.2	6.4	6.7	6.9	7.0	7.1	7.2	7.2	7.3	7.4	7.5	7.6	7.6	7.7	7.8
	B	−2.7	−1.6	−0.9	0	1.0	1.9	2.8	3.7	4.6	5.5	6.4	7.4	8.4	9.3	10.3	11.4	12.4
9Cr–1Mo steels	*A*	5.0	5.4	5.6	5.8	6.0	6.2	6.3	6.4	6.5	6.6	6.7	6.8	6.9	7.0	7.1	7.2	7.2
	B	−2.4	−1.4	−0.8	0	0.9	1.7	2.5	3.3	4.1	5.0	5.9	6.8	7.7	8.7	9.7	10.6	11.6
Straight chromium stainless steels																		
12Cr to 13Cr steels	*A*	5.1	5.5	5.7	5.9	6.2	6.3	6.4	6.5	6.5	6.6	6.7	6.7	6.8	6.8	6.9	6.9	7.0
	B	−2.4	−1.5	−0.8	0	1.0	1.7	2.5	3.3	4.2	5.0	5.8	6.7	7.6	8.5	9.4	10.2	11.1
15Cr to 17Cr steels	*A*	4.5	4.9	5.1	5.3	5.5	5.7	5.8	5.9	6.0	6.1	6.2	6.2	6.3	6.4	6.4	6.5	6.5
	B	−2.1	−1.3	−0.7	0	0.9	1.6	2.3	3.0	3.8	4.6	5.4	6.2	7.0	7.9	8.7	9.5	10.4
27Cr steels	*A*	4.3	4.7	4.9	5.0	5.2	5.2	5.3	5.4	5.4	5.5	5.6	5.7	5.7	5.8	5.9	5.9	6.0
	B	−2.0	−1.2	−0.7	0	0.8	1.4	2.1	2.8	3.5	4.2	4.9	5.6	6.4	7.2	8.0	8.7	9.6
Austenitic stainless steels (304, 305, 316, 317, 321, 347, 348 19-9DL, XM-15, etc.)	*A*	7.5	8.0	8.2	8.5	8.9	9.2	9.5	9.7	9.9	10.0	10.1	10.2	10.3	10.4	10.6	10.7	10.8
	B	−3.6	−2.1	−1.2	0	1.4	2.5	3.8	5.0	6.3	7.5	8.8	10.2	11.5	12.9	14.3	15.8	17.2
Other austenitic stainless steels (309, 310, 315, XM-19, etc.)	*A*	7.1	7.6	7.8	8.2	8.5	8.7	8.9	9.1	9.2	9.3	9.4	9.5	9.6	9.7	9.8	9.9	10.1
	B	−3.4	−2.0	−1.1	0	1.3	2.4	3.5	4.7	5.8	7.0	8.2	9.5	10.7	12.0	13.3	14.7	16.1
Gray iron	*A*	...	...	...	...	5.8	5.9	6.1	6.3	6.5	6.7	6.8	7.0	7.2	...	...	...	...
	B	...	...	...	0	0.9	1.6	2.4	3.2	4.1	5.0	6.0	7.0	8.0	...	...	...	...
Ductile cast iron	*A*	...	4.9	5.3	5.7	6.0	6.3	6.6	6.8	7.0	7.1	7.3	7.4	7.5	...	...	...	...
	B	...	−1.3	−0.8	0	0.9	1.7	2.6	3.5	4.5	5.4	6.4	7.3	8.4	...	...	...	...

Copyright © 2015 by the American Society of Mechanical Engineers.
No reproduction may be made of this material without written consent of ASME.

(14)

Table C-1 Thermal Expansion Data (Cont'd)

A = Mean Coefficient of Thermal Expansion, 10^{-6}in./in./°F
B = Linear Thermal Expansion, in./100 ft
} in Going From 70°F to Indicated Temperature [Note (1)]

Material	Coef-ficient	Temperature Range 70°F to −325	−150	−50	70	200	300	400	500	600	700	800	900	1,000	1,100	1,200	1,300	1,400
Monel (67Ni–30Cu) N04400	*A*	5.8	6.8	7.2	7.7	8.1	8.3	8.5	8.7	8.8	8.9	8.9	9.0	9.1	9.1	9.2	9.2	9.3
	B	−2.7	−1.8	−1.0	0	1.3	2.3	3.4	4.5	5.6	6.7	7.8	9.0	10.1	11.3	12.4	13.6	14.8
Nickel alloys N02200 and N02201	*A*	5.3	6.0	6.3	6.6	7.2	7.5	7.7	7.9	8.0	8.2	8.3	8.4	8.5	8.6	8.7	8.8	8.9
	B	−2.7	−1.7	−1.0	0	1.1	2.1	3.1	4.1	5.1	6.2	7.3	8.4	9.5	10.7	11.8	13.0	14.2
Nickel alloy N06022	*A*	. . .	. . .	. . .	6.9	6.9	6.9	6.9	7.0	7.0	7.2	7.3	7.5	7.7	7.9	8.1	8.3	8.5
	B	. . .	. . .	. . .	0	1.1	1.9	2.7	3.6	4.5	5.4	6.4	7.5	8.6	9.8	11.0	12.2	13.6
Nickel alloy N06600	*A*	5.5	6.1	6.4	6.8	7.1	7.3	7.5	7.6	7.8	7.9	8.0	8.2	8.3	8.4	8.6	8.7	8.9
	B	−2.6	−1.6	−0.9	0	1.1	2.0	3.0	3.9	5.0	6.0	7.0	8.1	9.3	10.4	11.6	12.9	14.2
Nickel alloy N06625	*A*	. . .	. . .	. . .	6.7	7.1	7.2	7.3	7.4	7.4	7.5	7.6	7.7	7.9	8.0	8.2	8.4	8.5
	B	. . .	. . .	. . .	0	1.1	2.0	2.9	3.8	4.7	5.6	6.6	7.7	8.8	9.9	11.1	12.3	13.6
Nickel alloys N08800 and N08810	*A*	5.9	6.9	7.4	7.9	8.4	8.6	8.8	8.9	9.0	9.1	9.2	9.3	9.4	9.5	9.6	9.7	9.8
	B	−2.8	−1.7	−1.1	0	1.3	2.4	3.5	4.6	5.7	6.9	8.1	9.3	10.5	11.8	13.0	14.4	15.7
Nickel alloy N08825	*A*	. . .	. . .	7.2	7.5	7.7	7.9	8.0	8.1	8.2	8.3	8.4	8.5	8.6	. . .	. . .	. . .	. . .
	B	. . .	. . .	−1.0	0	1.2	2.2	3.2	4.2	5.2	6.3	7.4	8.5	9.6	. . .	. . .	. . .	. . .
Nickel alloy N10276	*A*	. . .	. . .	. . .	6.0	6.3	6.5	6.7	6.9	7.1	7.2	7.4	7.5	7.6	7.7	7.8	7.9	8.0
	B	. . .	. . .	. . .	0	1.0	1.8	2.7	3.6	4.5	5.5	6.4	7.5	8.5	9.5	10.6	11.7	12.8
Copper alloys C1XXXX series	*A*	7.7	8.7	9.0	9.3	9.6	9.7	9.8	9.9	10.0	. . .	. . .	. . .	. . .	. . .	. . .	. . .	. . .
	B	−3.7	−2.3	−1.3	0	1.5	2.7	3.9	5.1	6.4	. . .	. . .	. . .	. . .	. . .	. . .	. . .	. . .
Bronze alloys	*A*	8.4	8.8	9.2	9.6	10.0	10.1	10.2	10.3	10.4	10.5	10.6	10.7	10.8	10.9	11.0	. . .	. . .
	B	−4.0	−2.3	−1.3	0	1.6	2.8	4.0	5.3	6.6	8.0	9.3	10.7	12.1	13.5	14.9	. . .	. . .
Brass alloys	*A*	8.2	8.5	9.0	9.3	9.8	10.0	10.2	10.5	10.7	10.9	11.2	11.4	11.6	11.9	12.1	. . .	. . .
	B	−3.9	−2.2	−1.3	0	1.5	2.8	4.1	5.4	6.8	8.2	9.8	11.4	13.0	14.7	16.4	. . .	. . .
Copper–nickel (70Cu–30Ni)	*A*	6.7	7.4	7.8	8.1	8.5	8.7	8.9	9.1	9.2	9.2	. . .	. . .	. . .	. . .	. . .	. . .	. . .
	B	−3.2	−2.0	−1.1	0	1.3	2.4	3.5	4.7	5.8	7.0	. . .	. . .	. . .	. . .	. . .	. . .	. . .
Aluminum alloys	*A*	9.9	10.9	11.6	12.1	13.0	13.3	13.6	13.9	14.2	. . .	. . .	. . .	. . .	. . .	. . .	. . .	. . .
	B	−4.7	−2.9	−1.7	0	2.0	3.7	5.4	7.2	9.0	. . .	. . .	. . .	. . .	. . .	. . .	. . .	. . .
Titanium alloys (Grades 1, 2, 3, 7, and 12)	*A*	. . .	. . .	4.5	4.6	4.7	4.8	4.8	4.9	4.9	5.0	5.1	. . .	. . .	. . .	. . .	. . .	. . .
	B	. . .	. . .	−0.6	0	0.7	1.3	1.9	2.5	3.1	3.8	4.5	. . .	. . .	. . .	. . .	. . .	. . .

Copyright © 2015 by the American Society of Mechanical Engineers.
No reproduction may be made of this material without written consent of ASME.

Table C-1 Thermal Expansion Data (Cont'd) (14)

NOTES:

(1) These data are for information and it is not to be implied that materials are suitable for all the temperature ranges shown.

(2) Group 1 alloys (by nominal composition):

Carbon steels
(C, C–Si, C–Mn, and C–Mn–Si)
C–$\frac{1}{2}$Mo
$\frac{1}{2}$Cr–$\frac{1}{5}$Mo–V
$\frac{1}{2}$Cr–$\frac{1}{4}$Mo–Si
$\frac{1}{2}$Cr–$\frac{1}{2}$Mo
$\frac{1}{2}$Cr–$\frac{1}{2}$Ni–$\frac{1}{4}$Mo
$\frac{3}{4}$Cr–$\frac{1}{2}$Ni–Cu
$\frac{3}{4}$Cr–$\frac{3}{4}$Ni–Cu–Al
1Cr–$\frac{1}{5}$Mo
1Cr–$\frac{1}{5}$Mo–Si
1Cr–$\frac{1}{2}$Mo
1Cr–$\frac{1}{2}$Mo–V
$1\frac{1}{4}$Cr–$\frac{1}{2}$Mo
$1\frac{1}{4}$Cr–$\frac{1}{2}$Mo–Si
$1\frac{3}{4}$Cr–$\frac{1}{2}$Mo–Cu
2Cr–$\frac{1}{2}$Mo
$2\frac{1}{4}$Cr–1Mo
3Cr–1Mo
$\frac{1}{2}$Ni–$\frac{1}{2}$Mo–V
$\frac{1}{2}$Ni–$\frac{1}{2}$Cr–$\frac{1}{4}$Mo–V
$\frac{3}{4}$Ni–$\frac{1}{2}$Mo–Cr–V
$\frac{3}{4}$Ni–$\frac{1}{2}$Mo–$\frac{1}{3}$Cr–V
$\frac{3}{4}$Ni–$\frac{1}{2}$Cu–Mo
$\frac{3}{4}$Ni–$\frac{1}{2}$Cr–$\frac{1}{2}$Mo–V
$\frac{3}{4}$Ni–1Mo–$\frac{3}{4}$Cr
1Ni–$\frac{1}{2}$Cr–$\frac{1}{2}$Mo
$1\frac{1}{4}$Ni–1Cr–$\frac{1}{2}$Mo
$1\frac{3}{4}$Ni–$\frac{3}{4}$Cr–$\frac{1}{4}$Mo
2Ni–$\frac{3}{4}$Cr–$\frac{1}{4}$Mo
2Ni–$\frac{3}{4}$Cr–$\frac{1}{3}$Mo
$2\frac{1}{2}$Ni
$3\frac{1}{2}$Ni
$3\frac{1}{2}$Ni–$1\frac{3}{4}$Cr–$\frac{1}{2}$Mo–V

(3) Group 2 alloys (by nominal composition):

Mn–V
Mn–$\frac{1}{4}$Mo
Mn–$\frac{1}{2}$Mo
Mn–$\frac{1}{2}$Mo–$\frac{1}{4}$Ni
Mn–$\frac{1}{2}$Mo–$\frac{1}{2}$Ni
Mn–$\frac{1}{2}$Mo–$\frac{3}{4}$Ni

Copyright © 2015 by the American Society of Mechanical Engineers.
No reproduction may be made of this material without written consent of ASME.

(14)

Table C-2 Thermal Expansion Data (SI Units)

A = Mean Coefficient of Thermal Expansion, 10^{-6} mm/mm/°C
B = Linear Thermal Expansion, mm/m
} in Going From 20°C to Indicated Temperature [Note (1)]

Material	Coefficient	Temperature Range 20°C to −200	−100	−50	20	50	75	100	125	150	175	200	225	250	275
Group 1 carbon and low alloy steels [Note (2)]	*A*	9.9	10.7	11.1	11.5	11.8	11.9	12.1	12.3	12.4	12.6	12.7	12.9	13.0	13.2
	B	−2.2	−1.3	−0.8	0	0.4	0.7	1.0	1.3	1.6	2.0	2.3	2.6	3.0	3.4
Group 2 low alloy steels [Note (3)]	*A*	10.8	11.7	12.0	12.6	12.8	13.0	13.1	13.2	13.4	13.5	13.6	13.7	13.8	13.9
	B	−2.4	−1.4	−0.8	0	0.4	0.7	1.0	1.4	1.7	2.1	2.4	2.8	3.2	3.6
5Cr–1Mo steels	*A*	10.1	10.8	11.2	11.5	11.8	12.0	12.1	12.3	12.4	12.5	12.6	12.6	12.7	12.8
	B	−2.2	−1.3	−0.8	0	0.4	0.7	1.0	1.3	1.6	1.9	2.3	2.6	2.9	3.3
9Cr–1Mo steels	*A*	9.0	9.8	10.1	10.5	10.6	10.7	10.9	11.0	11.1	11.2	11.3	11.4	11.5	11.6
	B	−2.0	−1.2	−0.7	0	0.3	0.6	0.9	1.2	1.4	1.7	2.0	2.3	2.6	3.0
Straight chromium stainless steels															
12Cr to 13Cr steels	*A*	9.1	9.9	10.2	10.6	10.9	11.0	11.1	11.3	11.4	11.4	11.5	11.6	11.6	11.7
	B	−2.0	−1.2	−0.7	0	0.3	0.6	0.9	1.2	1.5	1.8	2.1	2.4	2.7	3.0
15Cr to 17Cr steels	*A*	8.1	8.8	9.1	9.6	9.7	9.9	10.0	10.1	10.2	10.3	10.4	10.5	10.6	10.7
	B	−1.8	−1.1	−0.6	0	0.3	0.5	0.8	1.1	1.3	1.6	1.9	2.2	2.4	2.7
27Cr steels	*A*	7.7	8.5	8.7	9.0	9.2	9.2	9.3	9.4	9.4	9.5	9.5	9.6	9.6	9.7
	B	−1.7	−1.0	−0.6	0	0.3	0.5	0.7	1.0	1.2	1.5	1.7	2.0	2.2	2.5
Austenitic stainless steels (304, (305, 316, 317, 321, 347, 348 19-9DL XM-15, etc.)	*A*	13.5	14.3	14.7	15.3	15.6	15.9	16.2	16.4	16.6	16.8	17.0	17.2	17.4	17.5
	B	−3.0	−1.7	−1.0	0	0.5	0.9	1.3	1.7	2.2	2.6	3.1	3.5	4.0	4.5
Other austenitic stainless steels (309, 310, 315, XM-19, etc.)	*A*	12.8	13.6	14.1	14.7	15.0	15.2	15.4	15.6	15.7	15.9	16.0	16.1	16.3	16.4
	B	−2.8	−1.6	−1.0	0	0.4	0.8	1.2	1.6	2.0	2.5	2.9	3.3	3.7	4.2
Gray iron	*A*	. . .	. . .	. . .	9.8	10.1	10.2	10.4	10.5	10.7	10.8	11.0	11.1	11.2	11.4
	B	. . .	. . .	. . .	0	0.3	0.6	0.8	1.1	1.4	1.7	2.0	2.3	2.6	2.9
Ductile cast iron	*A*	. . .	8.8	9.5	10.3	10.5	10.7	10.9	11.1	11.3	11.6	11.8	12.0	12.2	12.4
	B	. . .	−1.1	−0.7	0	0.3	0.6	0.9	1.2	1.5	1.8	2.1	2.5	2.8	3.1
Monel (67Ni–30Cu) N04400	*A*	10.4	12.2	13.0	13.8	14.1	14.4	14.6	14.8	15.0	15.1	15.3	15.4	15.5	15.6
	B	−2.3	−1.5	−0.9	0	0.4	0.8	1.2	1.6	1.9	2.3	2.8	3.2	3.6	4.0
Nickel alloys N02200 and N02201	*A*	9.6	10.8	11.4	11.9	12.4	12.7	13.0	13.3	13.5	13.7	13.9	14.0	14.2	14.3
	B	−2.2	−1.4	−0.8	0	0.4	0.7	1.0	1.4	1.8	2.1	2.5	2.9	3.3	3.6
Nickel alloy N06022	*A*	. . .	. . .	. . .	12.4	12.4	12.4	12.4	12.4	12.4	12.4	12.4	12.5	12.5	12.6
	B	. . .	. . .	. . .	0	0.4	0.7	1.0	1.3	1.6	1.9	2.2	2.6	2.9	3.2
Nickel alloy N06600	*A*	9.9	10.8	11.5	12.3	12.5	12.7	12.8	13.0	13.2	13.3	13.5	13.6	13.7	13.8
	B	−2.2	−1.3	−0.8	0	0.4	0.7	1.0	1.4	1.7	2.1	2.4	2.8	3.2	3.5
Nickel alloy N06625	*A*	. . .	. . .	. . .	12.0	12.4	12.6	12.8	12.9	13.0	13.1	13.2	13.2	13.2	13.3
	B	. . .	. . .	. . .	0	0.4	0.7	1.0	1.4	1.7	2.0	2.4	2.7	3.0	3.4
Nickel alloys N08800 and N08810	*A*	10.6	12.5	13.3	14.2	14.6	14.9	15.1	15.3	15.5	15.6	15.8	15.9	16.0	16.1
	B	−2.3	−1.5	−0.9	0	0.4	0.8	1.2	1.6	2.0	2.4	2.8	3.3	3.7	4.1
Nickel alloy N08825	*A*	. . .	. . .	12.9	13.5	13.6	13.7	13.9	14.0	14.2	14.3	14.4	14.4	14.5	14.6
	B	. . .	. . .	−0.9	0	0.4	0.8	1.1	1.5	1.8	2.2	2.6	3.0	3.3	3.7
Nickel alloy N10276	*A*	. . .	. . .	. . .	10.8	11.0	11.2	11.4	11.6	11.7	11.9	12.0	12.2	12.4	12.5
	B	. . .	. . .	. . .	0	0.3	0.6	0.9	1.2	1.5	1.8	2.2	2.5	2.8	3.2

Copyright © 2015 by the American Society of Mechanical Engineers.
No reproduction may be made of this material without written consent of ASME.

Table C-2 Thermal Expansion Data (SI Units) (14)

A = Mean Coefficient of Thermal Expansion, 10^{-6} mm/mm/°C
B = Linear Thermal Expansion, mm/m
} in Going From 20°C to Indicated Temperature [Note (1)]

Temperature Range 20°C to																				
300	325	350	375	400	425	450	475	500	525	550	575	600	625	650	675	700	725	750	775	800
13.3	13.4	13.6	13.7	13.8	14.0	14.1	14.2	14.4	14.5	14.6	14.7	14.8	14.9	15.0	15.1	15.1	15.2	15.3	15.3	15.4
3.7	4.1	4.5	4.9	5.3	5.7	6.1	6.5	6.9	7.3	7.7	8.2	8.6	9.0	9.4	9.9	10.3	10.7	11.1	11.6	12.0
14.0	14.1	14.2	14.3	14.4	14.5	14.6	14.6	14.7	14.8	14.8	14.9	15.0	15.0	15.1	15.1	15.2	15.2	15.3	15.3	15.3
3.9	4.3	4.7	5.1	5.5	5.9	6.3	6.7	7.1	7.5	7.9	8.3	8.7	9.1	9.5	9.9	10.3	10.7	11.1	11.1	11.5
12.8	12.9	13.0	13.0	13.1	13.2	13.2	13.3	13.4	13.4	13.5	13.6	13.6	13.7	13.7	13.8	13.9	13.9	14.0	14.0	14.1
3.6	3.9	4.3	4.6	5.0	5.3	5.7	6.1	6.4	6.8	7.2	7.5	7.9	8.3	8.7	9.0	9.4	9.8	10.2	10.6	11.0
11.7	11.8	11.9	11.9	12.0	12.1	12.2	12.3	12.3	12.4	12.5	12.6	12.7	12.7	12.8	12.9	13.0	13.1	13.3	13.4	13.6
3.3	3.6	3.9	4.2	4.6	4.9	5.2	5.6	5.9	6.3	6.6	7.0	7.3	7.7	8.1	8.5	8.9	9.3	9.7	10.1	10.6
11.7	11.8	11.8	11.9	11.9	12.0	12.0	12.1	12.1	12.2	12.2	12.3	12.3	12.4	12.4	12.5	12.5	12.5	12.5	12.6	12.6
3.3	3.6	3.9	4.2	4.5	4.9	5.2	5.5	5.8	6.2	6.5	6.8	7.2	7.5	7.8	8.2	8.5	8.8	9.2	9.5	9.8
10.8	10.8	10.9	11.0	11.0	11.1	11.2	11.2	11.3	11.3	11.4	11.4	11.5	11.5	11.5	11.6	11.6	11.7	11.7	11.8	11.9
3.0	3.3	3.6	3.9	4.2	4.5	4.8	5.1	5.4	5.7	6.0	6.3	6.6	7.0	7.3	7.6	7.9	8.2	8.6	8.9	9.3
9.7	9.8	9.9	9.9	10.0	10.0	10.1	10.2	10.2	10.3	10.4	10.4	10.5	10.5	10.6	10.6	10.7	10.7	10.8	10.8	10.9
2.7	3.0	3.3	3.5	3.8	4.1	4.3	4.6	4.9	5.2	5.5	5.8	6.1	6.4	6.7	7.0	7.2	7.6	7.9	8.2	8.5
17.7	17.8	17.9	18.0	18.1	18.2	18.3	18.4	18.4	18.5	18.6	18.7	18.8	18.9	19.0	19.1	19.2	19.3	19.4	19.4	19.4
4.9	5.4	5.9	6.4	6.9	7.4	7.9	8.3	8.9	9.4	9.9	10.4	10.9	11.4	12.0	12.5	13.1	13.6	14.1	14.7	15.2
16.5	16.6	16.6	16.7	16.8	16.9	17.0	17.1	17.2	17.2	17.3	17.4	17.5	17.6	17.7	17.8	17.9	18.0	18.1	18.2	18.3
4.6	5.0	5.5	5.9	6.4	6.8	7.3	7.8	8.2	8.7	9.2	9.7	10.2	10.6	11.1	11.7	12.2	12.7	13.2	13.7	14.3
11.5	11.7	11.8	12.0	12.1	12.3	12.4	12.6	12.7	12.9	13.0	...	...	...	...	...	...	...	...	...	...
3.2	3.6	3.9	4.2	4.6	5.0	5.3	5.7	6.1	6.5	6.9	...	...	...	...	...	...	...	...	...	...
12.5	12.6	12.8	12.9	13.0	13.1	13.2	13.2	13.3	13.4	13.5	...	...	...	...	...	...	...	...	...	...
3.5	3.9	4.2	4.6	4.9	5.3	5.7	6.0	6.4	6.8	7.2	...	...	...	...	...	...	...	...	...	...
15.7	15.8	15.9	16.0	16.0	16.1	16.1	16.2	16.2	16.3	16.3	16.4	16.4	16.5	16.5	16.5	16.6	16.6	16.7	16.7	16.8
4.4	4.8	5.2	5.7	6.1	6.5	6.9	7.4	7.8	8.2	8.6	9.1	9.5	10.0	10.4	10.8	11.3	11.7	12.2	12.6	13.1
14.4	14.5	14.6	14.7	14.8	14.9	15.0	15.1	15.2	15.3	15.4	15.5	15.6	15.6	15.7	15.8	15.9	15.9	16.0	16.1	16.2
4.0	4.4	4.8	5.2	5.6	6.0	6.5	6.9	7.3	7.7	8.2	8.6	9.0	9.5	9.9	10.3	10.8	11.2	11.7	12.2	12.6
12.6	12.7	12.8	12.9	13.0	13.2	13.3	13.5	13.6	13.8	13.9	14.1	14.3	14.4	14.6	14.8	14.9	15.1	15.2	15.4	15.6
3.5	3.9	4.2	4.6	5.0	5.3	5.7	6.1	6.5	7.0	7.4	7.8	8.3	8.7	9.2	9.7	10.1	10.6	11.1	11.6	12.1
14.0	14.1	14.2	14.3	14.4	14.5	14.6	14.7	14.8	14.9	15.0	15.1	15.2	15.3	15.4	15.6	15.7	15.8	15.9	16.1	16.2
3.9	4.3	4.7	5.1	5.5	5.9	6.3	6.7	7.1	7.5	7.9	8.4	8.8	9.3	9.7	10.2	10.7	11.1	11.6	12.1	12.6
13.3	13.3	13.4	13.5	13.5	13.6	13.7	13.8	14.0	14.1	14.2	14.3	14.5	14.6	14.8	14.9	15.0	15.1	15.3	15.4	15.6
3.7	4.1	4.4	4.8	5.1	5.5	5.9	6.3	6.7	7.1	7.5	8.0	8.4	8.8	9.3	9.8	10.2	10.7	11.2	11.6	12.1
16.2	16.3	16.4	16.5	16.5	16.6	16.7	16.8	16.8	16.9	17.0	17.1	17.2	17.2	17.3	17.4	17.5	17.6	17.7	17.8	17.9
4.5	5.0	5.4	5.8	6.3	6.7	7.2	7.6	8.1	8.5	9.0	9.5	9.9	10.4	10.9	11.4	11.9	12.4	12.9	13.4	14.0
14.7	14.8	14.9	15.0	15.1	15.1	15.2	15.3	15.4	15.5	15.6	...	...	...	...	...	...	...	...	...	...
4.1	4.5	4.9	5.3	5.7	6.1	6.5	7.0	7.4	7.8	8.3	...	...	...	...	...	...	...	...	...	...
12.6	12.8	12.9	13.0	13.1	13.2	13.3	13.4	13.5	13.6	13.7	13.8	13.9	14.0	14.1	14.2	14.3	14.3	14.4	14.5	14.6
3.5	3.9	4.3	4.6	5.0	5.4	5.7	6.1	6.5	6.9	7.3	7.7	8.1	8.5	8.9	9.3	9.7	10.1	10.5	10.9	11.4

Copyright © 2015 by the American Society of Mechanical Engineers.
No reproduction may be made of this material without written consent of ASME.

(14)

Table C-2 Thermal Expansion Data (SI Units) (Cont'd)

A = Mean Coefficient of Thermal Expansion, 10^{-6} mm/mm/°C
B = Linear Thermal Expansion, mm/m
} in Going From 20°C to Indicated Temperature [Note (1)]

Material	Coefficient	Temperature Range 20°C to													
		−200	−100	−50	20	50	75	100	125	150	175	200	225	250	275
Copper alloys C1XXXX series	*A*	13.9	15.7	16.2	16.7	17.0	17.2	17.3	17.4	17.5	17.6	17.7	17.8	17.8	17.9
	B	−3.1	−1.9	−1.1	0	0.5	0.9	1.4	1.8	2.3	2.7	3.2	3.6	4.1	4.6
Bronze alloys	*A*	15.1	15.8	16.4	17.2	17.6	17.9	18.0	18.2	18.2	18.3	18.4	18.5	18.5	18.6
	B	−3.3	−1.9	−1.1	0	0.5	1.0	1.4	1.9	2.4	2.8	3.3	3.8	4.3	4.7
Brass alloys	*A*	14.7	15.4	16.0	16.7	17.1	17.4	17.6	17.8	18.0	18.2	18.4	18.6	18.8	19.0
	B	−3.2	−1.9	−1.1	0	0.5	1.0	1.4	1.9	2.3	2.8	3.3	3.8	4.3	4.8
Copper–nickel (70Cu–30Ni)	*A*	11.9	13.4	14.0	14.5	14.9	15.2	15.3	15.5	15.7	15.8	16.0	16.1	16.3	16.4
	B	−2.6	−1.6	−1.0	0	0.4	0.8	1.2	1.6	2.0	2.5	2.9	3.3	3.7	4.2
Aluminum alloys	*A*	18.0	19.7	20.8	21.7	22.6	23.1	23.4	23.7	23.9	24.2	24.4	24.7	25.0	25.2
	B	−4.0	−2.4	−1.5	0	0.7	1.3	1.9	2.5	3.1	3.7	4.4	5.1	5.7	6.4
Titanium alloys (Grades 1, 2, 3, 7, and 12)	*A*	. . .	. . .	8.2	8.3	8.4	8.5	8.5	8.6	8.6	8.6	8.7	8.7	8.7	8.8
	B	. . .	. . .	−0.6	0	0.3	0.5	0.7	0.9	1.1	1.3	1.6	1.8	2.0	2.2

NOTES:

(1) These data are for information and it is not to be implied that materials are suitable for all the temperature ranges shown.

(2) Group 1 alloys (by nominal composition):

Carbon steels
(C, C–Si, C–Mn, and C–Mn–Si)
C–$\frac{1}{2}$Mo
$\frac{1}{2}$Cr–$\frac{1}{5}$Mo–V
$\frac{1}{2}$Cr–$\frac{1}{4}$Mo–Si
$\frac{1}{2}$Cr–$\frac{1}{2}$Mo
$\frac{1}{2}$Cr–$\frac{1}{2}$Ni–$\frac{1}{4}$Mo
$\frac{3}{4}$Cr–$\frac{1}{2}$Ni–Cu
$\frac{3}{4}$Cr–$\frac{3}{4}$Ni–Cu–Al
1Cr–$\frac{1}{5}$Mo
1Cr–$\frac{1}{5}$Mo–Si
1Cr–$\frac{1}{2}$Mo
1Cr–$\frac{1}{2}$Mo–V
$1\frac{1}{4}$Cr–$\frac{1}{2}$Mo
$1\frac{1}{4}$Cr–$\frac{1}{2}$Mo–Si
$1\frac{3}{4}$Cr–$\frac{1}{2}$Mo–Cu
2Cr–$\frac{1}{2}$Mo
$2\frac{1}{4}$Cr–1Mo
3Cr–1Mo
$\frac{1}{2}$Ni–$\frac{1}{2}$Mo–V
$\frac{1}{2}$Ni–$\frac{1}{2}$Cr–$\frac{1}{4}$Mo–V
$\frac{3}{4}$Ni–$\frac{1}{2}$Mo–Cr–V
$\frac{3}{4}$Ni–$\frac{1}{2}$Mo–$\frac{1}{3}$Cr–V
$\frac{3}{4}$Ni–$\frac{1}{2}$Cu–Mo
$\frac{3}{4}$Ni–$\frac{1}{2}$Cr–$\frac{1}{2}$Mo–V
$\frac{3}{4}$Ni–1Mo–$\frac{3}{4}$Cr
1Ni–$\frac{1}{2}$Cr–$\frac{1}{2}$Mo
$1\frac{1}{4}$Ni–1Cr–$\frac{1}{2}$Mo
$1\frac{3}{4}$Ni–$\frac{3}{4}$Cr–$\frac{1}{4}$Mo
2Ni–$\frac{3}{4}$Cr–$\frac{1}{4}$Mo
2Ni–$\frac{3}{4}$Cr–$\frac{1}{3}$Mo
$2\frac{1}{2}$Ni
$3\frac{1}{2}$Ni
$3\frac{1}{2}$Ni–$1\frac{3}{4}$Cr–$\frac{1}{2}$Mo–V

(3) Group 2 alloys (by nominal composition):

Mn–V
Mn–$\frac{1}{4}$Mo
Mn–$\frac{1}{2}$Mo
Mn–$\frac{1}{2}$Mo–$\frac{1}{4}$Ni
Mn–$\frac{1}{2}$Mo–$\frac{1}{2}$Ni
Mn–$\frac{1}{2}$Mo–$\frac{3}{4}$Ni

Copyright © 2015 by the American Society of Mechanical Engineers.
No reproduction may be made of this material without written consent of ASME.

Table C-2 Thermal Expansion Data (SI Units) (Cont'd) (14)

A = Mean Coefficient of Thermal Expansion, 10^{-6} mm/mm/°C
B = Linear Thermal Expansion, mm/m
} in Going From 20°C to Indicated Temperature [Note (1)]

Temperature Range 20°C to																				
300	325	350	375	400	425	450	475	500	525	550	575	600	625	650	675	700	725	750	775	800
18.0	18.0	...	...	...	...	...	...	...	...	...	...	...	...	...	...	...	...	...	...	...
5.0	5.5	...	...	...	...	...	...	...	...	...	...	...	...	...	...	...	...	...	...	...
18.7	18.8	18.9	19.0	19.0	19.1	19.2	19.3	19.4	19.4	19.5	19.6	19.7	19.7	19.8	...	...	...	...	...	...
5.2	5.7	6.2	6.7	7.2	7.7	8.3	8.8	9.3	9.8	10.3	10.9	11.4	11.9	12.5	...	...	...	...	...	...
19.2	19.3	19.5	19.6	19.8	20.1	20.3	20.5	20.7	20.8	21.0	21.2	21.4	21.6	21.8	...	...	...	...	...	...
5.4	5.9	6.4	7.0	7.5	8.2	8.7	9.3	9.9	10.5	11.1	11.8	12.4	13.1	13.7	...	...	...	...	...	...
16.5	16.5	16.6	16.6	16.7	...	...	...	...	...	...	...	...	...	...	...	...	...	...	...	...
4.6	5.0	5.5	5.9	6.3	...	...	...	...	...	...	...	...	...	...	...	...	...	...	...	...
25.5	25.6	...	...	...	...	...	...	...	...	...	...	...	...	...	...	...	...	...	...	...
7.1	7.8	...	...	...	...	...	...	...	...	...	...	...	...	...	...	...	...	...	...	...
8.8	8.8	8.9	8.9	9.0	9.2	...	...	...	...	...	...	...	...	...	...	...	...	...	...	...
2.5	2.7	2.9	3.2	3.4	3.7	...	...	...	...	...	...	...	...	...	...	...	...	...	...	...

Table C-3 DELETED (14)

Copyright © 2015 by the American Society of Mechanical Engineers.
No reproduction may be made of this material without written consent of ASME.

Table C-5 Thermal Expansion Coefficients, Nonmetals

Material Description	Mean Coefficients (Divide Table Values by 10^6)			
	in./in., °F	Range, °F	mm/mm, °C	Range, °C
Thermoplastics				
Acetal AP2012	2	. . .	3.6	. . .
Acrylonitrile-butadiene-styrene				
ABS 1208	60	. . .	108	. . .
ABS 1210	55	45–55	99	7–13
ABS 1316	40	. . .	72	. . .
ABS 2112	40	. . .	72	. . .
Cellulose acetate butyrate				
CAB MH08	80	. . .	144	. . .
CAB S004	95	. . .	171	. . .
Chlorinated poly(vinyl chloride)				
CPVC 4120	35	. . .	63	. . .
Polybutylene PB 2110	72	. . .	130	. . .
Polyether, chlorinated	45	. . .	81	. . .
Polyethylene				
PE2606	100	46–100	180	8–38
PE2706	100	46–100	180	8–38
PE3608	90	46–100	162	8–38
PE3708	90	46–100	162	8–38
PE3710	90	46–100	162	8–38
PE4708	80	46–100	144	8–38
PE4710	80	46–100	144	8–38
Polyphenylene POP 2125	30	. . .	54	. . .
Polypropylene				
PP1110	48	33–67	86	1–19
PP1208	43	. . .	77	. . .
PP2105	40	. . .	72	. . .
PP0210B44002	80	. . .	144	. . .
PP0210G07G11030	19	. . .	35	. . .
Poly(vinyl chloride)				
PVC1120	30	23–37	54	−5 to +3
PVC1220	35	34–40	63	1–4
PVC2110	50	. . .	90	. . .
PVC2112	45	. . .	81	. . .
PVC2116	40	37–45	72	3–7
PVC2120	30	. . .	54	. . .
Poly(vinylidene fluoride)	79	. . .	142	. . .
Poly(vinylidene chloride)	100	. . .	180	. . .
Polytetrafluoroethylene	55	73–140	99	23–60
Poly(fluorinated ethylenepropylene)	46–58	73–140	83–104	23–60
Poly(perfluoroalkoxy alkane)	67	70–212	121	21–100
Poly(perfluoroalkoxy alkane)	94	212–300	169	100–149
Poly(perfluoroalkoxy alkane)	111	300–408	200	149–209

Copyright © 2015 by the American Society of Mechanical Engineers.
No reproduction may be made of this material without written consent of ASME.

Table C-5 Thermal Expansion Coefficients, Nonmetals (Cont'd)

Material Description	Mean Coefficients (Divide Table Values by 10^6)			
	in./in., °F	Range, °F	mm/mm, °C	Range, °C
Reinforced Thermosetting Resins and Reinforced Plastic Mortars				
Glass-epoxy, centrifugally cast	9–13	. . .	16–23.5	. . .
Glass-polyester, centrifugally cast	9–15	. . .	16–27	. . .
Glass-polyester, filament-wound	9–11	. . .	16–20	. . .
Glass-polyester, hand lay-up	12–15	. . .	21.5–27	. . .
Glass-epoxy, filament-wound	9–13	. . .	16–23.5	. . .
Other Nonmetallic Materials				
Borosilicate glass	1.8	. . .	3.25	. . .

GENERAL NOTES:

(a) For Code references to this Appendix, see para. A319.3.1. These data are for use in the absence of more applicable data. It is the designer's responsibility to verify that materials are suitable for the intended service at the temperatures shown.

(b) Individual compounds may vary from the values shown. Consult manufacturer for specific values for products.

Copyright © 2015 by the American Society of Mechanical Engineers.
No reproduction may be made of this material without written consent of ASME.

(14)

Table C-6 Modulus of Elasticity, U.S. Units, for Metals

Material	E = Modulus of Elasticity, Msi (Millions of psi), at Temperature, °F									
	−425	−400	−350	−325	−200	−100	70	200	300	400
Ferrous Metals										
Gray iron	...	...	...	...	...	...	13.4	13.2	12.9	12.6
Carbon steels, C ≤ 0.3%	31.9	...	...	31.4	30.8	30.2	29.5	28.8	28.3	27.7
Carbon steels, C > 0.3%	31.7	...	...	31.2	30.6	30.0	29.3	28.6	28.1	27.5
Carbon–moly steels	31.7	...	...	31.1	30.5	29.9	29.2	28.5	28.0	27.4
Nickel steels, Ni 2%–9%	30.1	...	...	29.6	29.1	28.5	27.8	27.1	26.7	26.1
Cr–Mo steels, Cr ½%–2%	32.1	...	...	31.6	31.0	30.4	29.7	29.0	28.5	27.9
Cr–Mo steels, Cr 2¼%–3%	33.1	...	...	32.6	32.0	31.4	30.6	29.8	29.4	28.8
Cr–Mo steels, Cr 5%–9%	33.4	...	...	32.9	32.3	31.7	30.9	30.1	29.7	29.0
Chromium steels, Cr 12%, 17%, 27%	31.8	...	...	31.2	30.7	30.1	29.2	28.5	27.9	27.3
Austenitic steels (TP304, 310, 316, 321, 347)	30.8	...	...	30.3	29.7	29.0	28.3	27.6	27.0	26.5
Copper and Copper Alloys (UNS Nos.)										
Comp. and leaded Sn–bronze (C83600, C92200)	...	...	...	14.8	14.6	14.4	14.0	13.7	13.4	13.2
Naval and Si–brass, Si– & Al–bronze (C46400, C65500, C95200, C95400)	...	...	...	15.9	15.6	15.4	15.0	14.6	14.4	14.1
Copper (C11000)	...	...	...	16.9	16.6	16.5	16.0	15.6	15.4	15.0
Copper, red brass, Al–bronze (C10200, C12000, C12200, C12500, C14200, C23000, C61400)	...	...	...	18.0	17.7	17.5	17.0	16.6	16.3	16.0
90Cu–10Ni (C70600)	...	...	...	19.0	18.7	18.5	18.0	17.6	17.3	16.9
Leaded Ni–bronze	...	...	...	20.1	19.8	19.6	19.0	18.5	18.2	17.9
80Cu–20Ni (C71000)	...	...	...	21.2	20.8	20.6	20.0	19.5	19.2	18.8
70Cu–30Ni (C71500)	...	...	...	23.3	22.9	22.7	22.0	21.5	21.1	20.7
Nickel and Nickel Alloys (UNS Nos.)										
Alloy 400 N04400	28.3	...	...	27.8	27.3	26.8	26.0	25.4	25.0	24.7
Alloy N06035	29.2	...	...	29.1	29.0	28.8	28.5	28.1	27.8	27.5
Alloys N06007, N08320	30.3	...	...	29.5	29.2	28.6	27.8	27.1	26.7	26.4
Alloys N08800, N08810, N06002	31.1	...	...	30.5	29.9	29.4	28.5	27.8	27.4	27.1
Alloys N06455, N10276	32.5	...	...	31.6	31.3	30.6	29.8	29.1	28.6	28.3
Alloys N02200, N02201, N06625	32.7	...	...	32.1	31.5	30.9	30.0	29.3	28.8	28.5
Alloy N06600	33.8	...	...	33.2	32.6	31.9	31.0	30.2	29.9	29.5
Alloy N10001	33.9	...	...	33.3	32.7	32.0	31.1	30.3	29.9	29.5
Alloy N10665	34.2	...	...	33.3	33.0	32.3	31.4	30.6	30.1	29.8
Alloy N10675	...	...	...	33.7	32.9	32.3	31.4	30.7	30.2	29.8
Unalloyed Titanium										
Grades 1, 2, 3, and 7	...	...	...	...	...	...	15.5	15.0	14.6	14.0
Zirconium Alloys										
R60702	...	...	...	...	...	...	14.4	14.4	14.4	14.4
R60705	...	...	...	...	...	...	14.2	14.2	14.2	14.2

Copyright © 2015 by the American Society of Mechanical Engineers.
No reproduction may be made of this material without written consent of ASME.

Table C-6 Modulus of Elasticity, U.S. Units, for Metals (14)

E = Modulus of Elasticity, Msi (Millions of psi), at Temperature, °F											
500	600	700	800	900	1000	1100	1200	1300	1400	1500	Material
											Ferrous Metals
12.2	11.7	11.0	10.2	...	...	...	...	...	...	...	Gray iron
27.3	26.7	25.5	24.2	22.4	20.4	18.0	...	...	...	...	Carbon steels, C ≤ 0.3%
27.1	26.5	25.3	24.0	22.2	20.2	17.9	15.4	...	...	...	Carbon steels, C > 0.3%
27.0	26.4	25.3	23.9	22.2	20.1	17.8	15.3	...	...	...	Carbon–moly steels
25.7	25.2	24.6	23.0	...	...	...	...	...	...	...	Nickel steels, Ni 2%–9%
27.5	26.9	26.3	25.5	24.8	23.9	23.0	21.8	20.5	18.9	...	Cr–Mo steels, Cr $\frac{1}{2}$%–2%
28.3	27.7	27.1	26.3	25.6	24.6	23.7	22.5	21.1	19.4	...	Cr–Mo steels, Cr $2\frac{1}{4}$%–3%
28.6	28.0	27.3	26.1	24.7	22.7	20.4	18.2	15.5	12.7	...	Cr–Mo steels, Cr 5%–9%
26.7	26.1	25.6	24.7	22.2	21.5	19.1	16.6	...	...	...	Chromium steels, Cr 12%, 17%, 27%
25.8	25.3	24.8	24.1	23.5	22.8	22.1	21.2	20.2	19.2	18.1	Austenitic steels (TP304, 310, 316, 321, 347)
											Copper and Copper Alloys (UNS Nos.)
12.9	12.5	12.0	...	...	...	...	...	...	...	...	Comp. and leaded Sn–bronze (C83600, C92200)
13.8	13.4	12.8	...	...	...	...	...	...	...	...	Naval and Si–brass, Si– & Al–bronze (C46400, C65500, C95200, C95400)
14.7	14.2	13.7	...	...	...	...	...	...	...	...	Copper (C11000)
15.6	15.1	14.5	...	...	...	...	...	...	...	...	Copper, red brass, Al–bronze (C10200, C12000, C12200, C12500, C14200, C23000, C61400)
16.6	16.0	15.4	...	...	...	...	...	...	...	...	90Cu–10Ni (C70600)
17.5	16.9	16.2	...	...	...	...	...	...	...	...	Leaded Ni-bronze
18.4	17.8	17.1	...	...	...	...	...	...	...	...	80Cu–20Ni (C71000)
20.2	19.6	18.8	...	...	...	...	...	...	...	...	70Cu–30Ni (C71500)
											Nickel and Nickel Alloys (UNS Nos.)
24.3	24.1	23.7	23.1	22.6	22.1	21.7	21.2	...	...	...	Alloy 400 N04400
27.1	26.7	26.3	25.8	25.3	24.8	24.2	23.6	...	...	...	Alloy N06035
26.0	25.7	25.3	24.7	24.2	23.6	23.2	22.7	...	...	...	Alloys N06007, N08320
26.6	26.4	25.9	25.4	24.8	24.2	23.8	23.2	...	...	...	Alloys N08800, N08810, N06002
27.9	27.6	27.1	26.5	25.9	25.3	24.9	24.3	...	...	...	Alloys N06455, N10276
28.1	27.8	27.3	26.7	26.1	25.5	25.1	24.5	...	...	...	Alloys N02200, N02201, N06625
29.0	28.7	28.2	27.6	27.0	26.4	25.9	25.3	...	...	...	Alloy N06600
29.1	28.8	28.3	27.7	27.1	26.4	26.0	25.3	...	...	...	Alloy N10001
29.4	29.0	28.6	27.9	27.3	26.7	26.2	25.6	...	...	...	Alloy N10665
29.3	28.9	28.4	27.9	27.4	26.8	26.2	25.6	24.9	24.2	23.4	Alloy N10675
											Unalloyed Titanium
13.3	12.6	11.9	11.2	...	...	...	...	...	...	...	Grades 1, 2, 3, and 7
											Zirconium Alloys
14.4	14.4	14.4	14.4	...	...	...	...	...	...	...	R60702
14.2	14.2	14.2	14.2	...	...	...	...	...	...	...	R60705

Copyright © 2015 by the American Society of Mechanical Engineers.
No reproduction may be made of this material without written consent of ASME.

Table C-6 Modulus of Elasticity, U.S. Units, for Metals (Cont'd)

Material	E = Modulus of Elasticity, Msi (Millions of psi), at Temperature, °F									
	−425	−400	−350	−325	−200	−100	70	200	300	400
Aluminum and Aluminum Alloys (UNS Nos.)										
Grades 443, 1060, 1100, 3003, 3004, 6061, 6063 (A24430, A91060, A91100, A93003, A93004, A96061, A96063)	11.4	. . .	. . .	11.1	10.8	10.5	10.0	9.6	9.2	8.7
Grades 5052, 5154, 5454, 5652 (A95052, A95154, A95454, A95652)	11.6	. . .	. . .	11.3	11.0	10.7	10.2	9.7	9.4	8.9
Grades 356, 5083, 5086, 5456 (A03560, A95083, A95086, A95456)	11.7	. . .	. . .	11.4	11.1	10.8	10.3	9.8	9.5	9.0

GENERAL NOTE: For Code references to this Appendix, see para. 319.3.2. These data are for use in the absence of more applicable data. It is the designer's responsibility to verify that materials are suitable for the intended service at the temperatures shown.

Copyright © 2015 by the American Society of Mechanical Engineers.
No reproduction may be made of this material without written consent of ASME.

Table C-8 Modulus of Elasticity, Nonmetals

Material Description	*E*, ksi (73.4°F)	*E*, MPa (23°C)
Thermoplastics [Note (1)]		
Acetal	410	2 830
ABS, Type 1210	250	1 725
ABS, Type 1316	340	2 345
CAB	120	825
PVC, Type 1120	420	2 895
PVC, Type 1220	410	2 825
PVC, Type 2110	340	2 345
PVC, Type 2116	380	2 620
Chlorinated PVC	420	2 895
Chlorinated polyether	160	1 105
PE2606	100	690
PE2706	100	690
PE3608	125	860
PE3708	125	860
PE3710	125	860
PE4708	130	895
PE4710	130	895
Polypropylene	120	825
Poly(vinylidene chloride)	100	690
Poly(vinylidene fluoride)	194	1 340
Poly(tetrafluorethylene)	57	395
Poly(fluorinated ethylenepropylene)	67	460
Poly(perfluoroalkoxy alkane)	100	690
Thermosetting Resins, Axially Reinforced		
Epoxy-glass, centrifugally cast	1,200–1,900	8 275–13 100
Epoxy-glass, filament-wound	1,100–2,000	7 585–13 790
Polyester-glass, centrifugally cast	1,200–1,900	8 275–13 100
Polyester-glass, hand lay-up	800–1,000	5 515–6 895
Other		
Borosilicate glass	9,800	67 570

GENERAL NOTE: For Code references to this Appendix, see para. A319.3.2. These data are for use in the absence of more applicable data. It is the designer's responsibility to verify that materials are suitable for the intended service at the temperatures shown.

NOTE:

(1) The modulus of elasticity data shown for thermoplastics are based on short-term tests. The manufacturer should be consulted to obtain values for use under long-term loading.

Copyright © 2015 by the American Society of Mechanical Engineers.
No reproduction may be made of this material without written consent of ASME.

APPENDIX D
FLEXIBILITY AND STRESS INTENSIFICATION FACTORS

See Table D300.

(14) **Table D300 Flexibility Factor, *k*, and Stress Intensification Factor, *i***

Description	Flexibility Factor, k	Stress Intensification Factor [Notes (1), (2)] Out-of-Plane, i_o	In-Plane, i_i	Flexibility Characteristic, h	Sketch
Welding elbow or pipe bend [Notes (1), (3)–(6)]	$\frac{1.65}{h}$	$\frac{0.75}{h^{2/3}}$	$\frac{0.9}{h^{2/3}}$	$\frac{\overline{T}R_1}{r_2^{\,2}}$	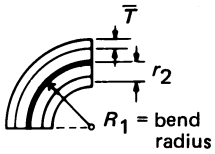
Closely spaced miter bend $s < r_2\,(1 + \tan\theta)$ [Notes (1), (3), (4), (6)]	$\frac{1.52}{h^{5/6}}$	$\frac{0.9}{h^{2/3}}$	$\frac{0.9}{h^{2/3}}$	$\frac{\cot\theta}{2}\left(\frac{s\overline{T}}{r_2^{\,2}}\right)$	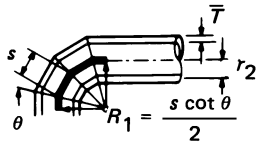
Single miter bend or widely spaced miter bend $s \geq r_2\,(1 + \tan\theta)$ [Notes (1), (3), (6)]	$\frac{1.52}{h^{5/6}}$	$\frac{0.9}{h^{2/3}}$	$\frac{0.9}{h^{2/3}}$	$\frac{1 + \cot\theta}{2}\left(\frac{\overline{T}}{r_2}\right)$	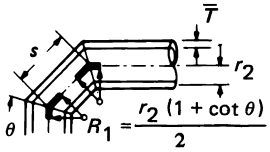
Welding tee in accordance with ASME B16.9 [Notes (1), (3), (5), (7), (8)]	1	$\frac{0.9}{h^{2/3}}$	$\frac{3}{4}i_o + \frac{1}{4}$	$3.1\,\frac{\overline{T}}{r_2}$	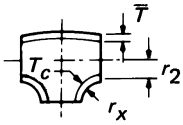
Reinforced fabricated tee with pad or saddle [Notes (1), (3), (8), (9), (10)]	1	$\frac{0.9}{h^{2/3}}$	$\frac{3}{4}\,i_o + \frac{1}{4}$	$\frac{(\overline{T} + \frac{1}{2}\,\overline{T}_r)^{2.5}}{\overline{T}^{\,1.5}\,r_2}$	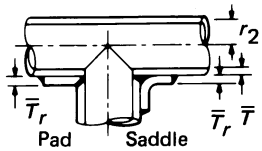

Copyright © 2015 by the American Society of Mechanical Engineers.
No reproduction may be made of this material without written consent of ASME.

Table D300 Flexibility Factor, *k*, and Stress Intensification Factor, *i* (Cont'd) (14)

Description	Flexibility Factor, k	Stress Intensification Factor [Notes (1), (2)] Out-of-Plane, i_o	In-Plane, i_i	Flexibility Characteristic, h	Sketch
Unreinforced fabricated tee [Notes (1), (3), (8), (10)]	1	$\frac{0.9}{h^{2/3}}$	$\frac{3}{4}i_o + \frac{1}{4}$	$\frac{\overline{T}}{r_2}$	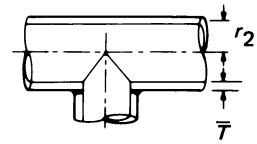
Extruded welding tee with $r_x \geq 0.05\ D_b$ $T_c < 1.5\ \overline{T}$ [Notes (1), (3), (8)]	1	$\frac{0.9}{h^{2/3}}$	$\frac{3}{4}i_o + \frac{1}{4}$	$\left(1 + \frac{r_x}{r_2}\right)\frac{\overline{T}}{r_2}$	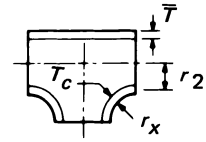
Welded-in contour insert [Notes (1), (3), (7), (8)]	1	$\frac{0.9}{h^{2/3}}$	$\frac{3}{4}i_o + \frac{1}{4}$	$3.1\ \frac{\overline{T}}{r_2}$	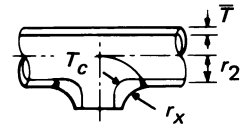
Branch welded-on fitting (integrally reinforced) [Notes (1), (3), (10), (11)]	1	$\frac{0.9}{h^{2/3}}$	$\frac{0.9}{h^{2/3}}$	$3.3\ \frac{\overline{T}}{r_2}$	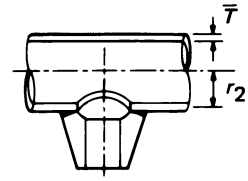

Description	Flexibility Factor, k	Stress Intensification Factor, i
Butt welded joint, reducer, or weld neck flange	1	1.0
Double-welded slip-on flange	1	1.2
Fillet or socket weld	1	1.3 [Note (12)]
Lap joint flange (with ASME B16.9 lap joint stub)	1	1.6
Threaded pipe joint or threaded flange	1	2.3
Corrugated straight pipe, or corrugated or creased bend [Note (13)]	5	2.5

Copyright © 2015 by the American Society of Mechanical Engineers.
No reproduction may be made of this material without written consent of ASME.

(14) **Table D300 Flexibility Factor, *k*, and Stress Intensification Factor, *i* (Cont'd)**

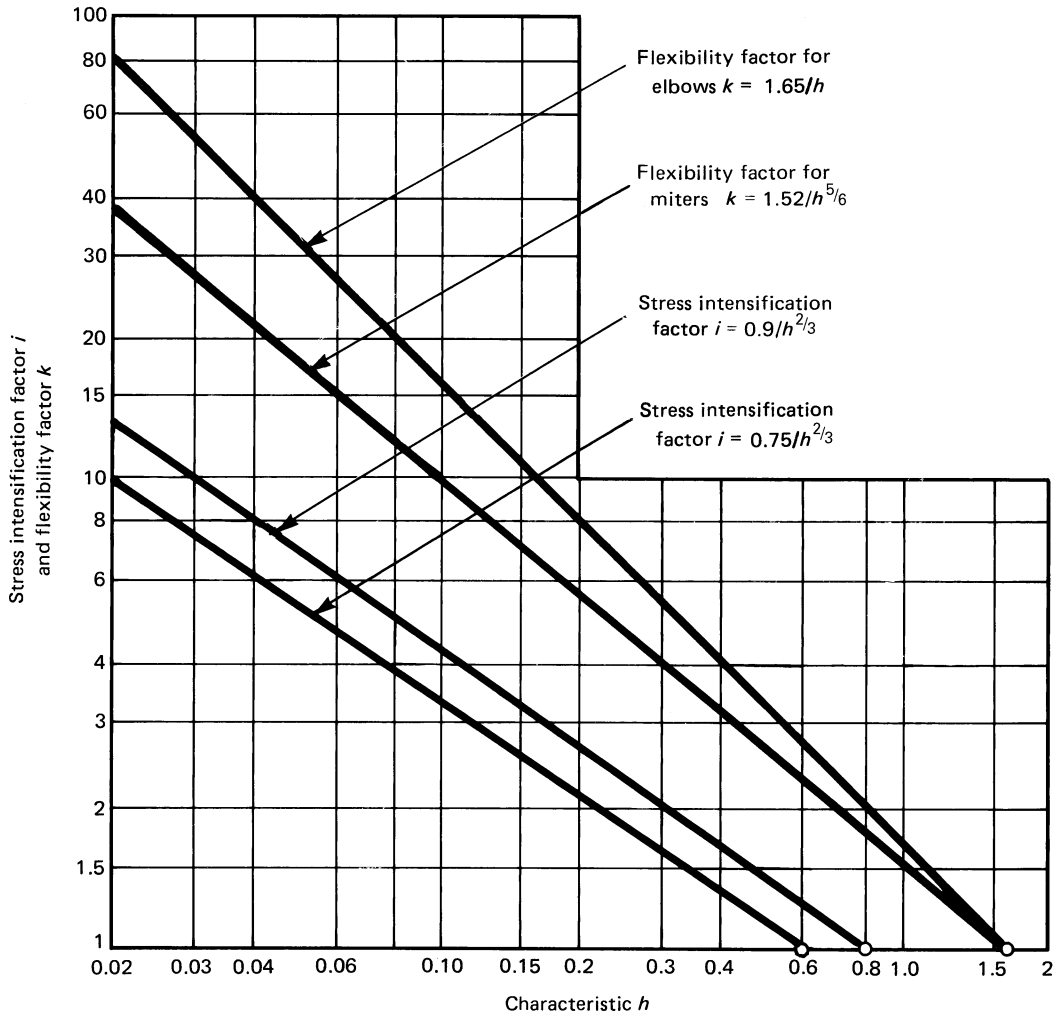

Chart A

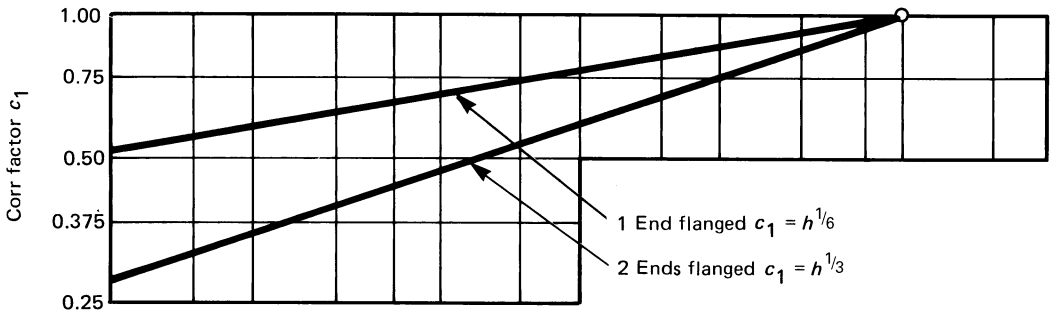

Chart B

Copyright © 2015 by the American Society of Mechanical Engineers.
No reproduction may be made of this material without written consent of ASME.

Table D300 Flexibility Factor, *k*, and Stress Intensification Factor, *i* (Cont'd) (14)

GENERAL NOTE: Stress intensification and flexibility factor data in Table D300 are for use in the absence of more directly applicable data (see para. 319.3.6). Their validity has been demonstrated for $D/\overline{T} \leq 100$.

NOTES:

(1) The flexibility factor, *k*, in the Table applies to bending in any plane; also see para. 319.3.6. The flexibility factors, *k*, and stress intensification factors, *i*, shall apply over the effective arc length (shown by heavy centerlines in the illustrations) for curved and miter bends, and to the intersection point for tees.

(2) A single intensification factor equal to $0.9/h^{2/3}$ may be used for both i_i and i_o if desired.

(3) The values of *k* and *i* can be read directly from Chart A by entering with the characteristic *h* computed from the formulas given above. Nomenclature is as follows:

D_b = outside diameter of branch
R_1 = bend radius of welding elbow or pipe bend
r_x = see definition in para. 304.3.4(c)
r_2 = mean radius of matching pipe
s = miter spacing at centerline
$\overline{T}$ = for elbows and miter bends, the nominal wall thickness of the fitting
= for tees, the nominal wall thickness of the matching pipe
T_c = crotch thickness of branch connections measured at the center of the crotch where shown in the illustrations
$\overline{T}_r$ = pad or saddle thickness
θ = one-half angle between adjacent miter axes

(4) Where flanges are attached to one or both ends, the values of *k* and *i* in the Table shall be corrected by the factors C_1, which can be read directly from Chart B, entering with the computed *h*.

(5) The designer is cautioned that cast buttwelded fittings may have considerably heavier walls than that of the pipe with which they are used. Large errors may be introduced unless the effect of these greater thicknesses is considered.

(6) In large diameter thin-wall elbows and bends, pressure can significantly affect the magnitudes of *k* and *i*. To correct values from the Table, divide *k* by

$$1 + 6\left(\frac{P_j}{E_j}\right)\left(\frac{r_2}{\overline{T}}\right)^{7/3}\left(\frac{R_1}{r_2}\right)^{1/3}$$

divide *i* by

$$1 + 3.25\left(\frac{P_j}{E_j}\right)\left(\frac{r_2}{\overline{T}}\right)^{5/2}\left(\frac{R_1}{r_2}\right)^{2/3}$$

For consistency, use kPa and mm for SI metric, and psi and in. for U.S. customary notation.

(7) If $r_x \geq \frac{1}{8} D_b$ and $T_c \geq 1.5\overline{T}$, a flexibility characteristic of $4.4\ \overline{T}/r_2$ may be used.

(8) Stress intensification factors for branch connections are based on tests with at least two diameters of straight run pipe on each side of the branch centerline. More closely loaded branches may require special consideration.

(9) When $\overline{T}_r$ is $> 1\frac{1}{2}\ \overline{T}$, use $h = 4\ \overline{T}/r_2$.

(10) The out-of-plane stress intensification factor (SIF) for a reducing branch connection with branch-to-run diameter ratio of $0.5 < d/D < 1.0$ may be nonconservative. A smooth concave weld contour has been shown to reduce the SIF. Selection of the appropriate SIF is the designer's responsibility.

(11) The designer must be satisfied that this fabrication has a pressure rating equivalent to straight pipe.

(12) For welds to socket welded fittings, the stress intensification factor is based on the assumption that the pipe and fitting are matched in accordance with ASME B16.11 and a fillet weld is made between the pipe and fitting as shown in Fig. 328.5.2C. For welds to socket welded flanges, the stress intensification factor is based on the weld geometry shown in Fig. 328.5.2B, illustration (3) and has been shown to envelope the results of the pipe to socket welded fitting tests. Blending the toe of the fillet weld smoothly into the pipe wall, as shown in the concave fillet welds in Fig. 328.5.2A, has been shown to improve the fatigue performance of the weld.

(13) Factors shown apply to bending. Flexibility factor for torsion equals 0.9.

Copyright © 2015 by the American Society of Mechanical Engineers.
No reproduction may be made of this material without written consent of ASME.

(14)

APPENDIX E
REFERENCE STANDARDS

Standards incorporated in this Code by reference, and the names and addresses of the sponsoring organizations, are shown in this Appendix. It is not practical to refer to a specific edition of each standard throughout the Code text; instead, the specific edition reference dates are shown here. Specific edition reference dates are not provided for ASME codes and standards. For ASME codes and standards, the latest published edition in effect at the time this Code is specified is the specific edition referenced by this Code unless otherwise specified in the engineering design. Subsequent issues and revisions of these referenced standards and any new standards incorporated in the Code by reference in Code Addenda will be listed (after review and acceptance by the Code Committee) in revisions of this Appendix E.

A component ordinarily is not marked to indicate the edition date of the standard to which it is manufactured. It is therefore possible that an item taken from inventory was produced in accordance with a superseded edition, or an edition not yet approved by the Code (because it is of later date than that listed and is in use). If compliance with a specific edition is a requirement of the intended service, it usually will be necessary to state the specific requirement in the purchase specification and to maintain identification of the component until it is put in service.

ASTM Specifications

A20-96a
A36/A36M-08
A47/A47M-99 (R2004)
A48/A48M-03 (R2008)

A53/A53M-07

A105/A105M-09
A106/A106M-08
A126-04
A134-96 (R2005)
A135/A135M-06
A139/A139M-04

A167-99 (R2009)
A179-90a (R2005)
A181/A181M-06
A182/A182M-09a
A193/A193M-10a
A194/A194M-10
A197/A197M-00 (R2006)

A202/A202M-03
A203/A203M-97 (R2007)
A204/A204M-03 (R2007)
A210/A210M-02 (R2007)
A213-09b
A216/A216M-08
A217/A217M-08
A234/A234M-07
A240/A240M-11b
A249/A249M-08

A263-94a
A264-94a
A265-94a
A268/A268M-05
A269-08

ASTM Specifications (Cont'd)

A276-97
A278/A278M-01 (R2006)
A283/A283M-03 (R2007)
A285/A285M-03 (R2007)
A299/A299M-04

A302/A302M-03 (R2007)
A307-07b
A312/A312M-09
A320/A320M-10
A325-97
A333/A333M-05
A334/A334M-04a
A335/A335M-06
A350/A350M-07

A351/A351M-06
A352/A352M-06
A353/A353M-04
A354-07a
A358/A358M-08a
A369/A369M-06
A370-11
A376/A376M-06
A381-96 (R2005)
A387/A387M-06a
A395/A395M-99 (R2009)

A403/A403M-07a
A409/A409M-08a
A420/A420M-07
A426/A426M-08
A437/A437M-10a

A451/A451M-06
A453/A453M-10
A479/A479M-11

ASTM Specifications (Cont'd)

A487/A487M-93 (R2007)
A494/A494M-09

A508/A508M-05b
A515/A515M-03 (R2007)
A516/A516M-06
A524-96 (R2005)
A530-98
A537/A537M-08

A553/A553M-06
A563-07a
A571/A571M-01 (R2006)
A587-96 (R2005)

A645/A645M-05
A671-06
A672-08
A675/A675M-03 (R2009)
A691-98 (R2007)
A694/A694M-13
A696-90a (R2012)

A723/A723M-10
A789/A789M-09
A790/A790M-09

A813/A813M-09
A814/A814M-08
A815/A815M-09
A992-06a

A1010/A1010M-01 (R2009)
A1011/A1011M-10
A1053/A1053M-11

B21/B21M-06
B26/B26M-09
B32-08
B42-02$^{\epsilon 1}$
B43-98 (R2004)

Copyright © 2015 by the American Society of Mechanical Engineers.
No reproduction may be made of this material without written consent of ASME.

REFERENCE STANDARDS (CONT'D)

ASTM Specifications (Cont'd)

B61-08
B62-09
B68-02/B68M-99 (R2005)
B75-02/B75M-99 (R2005)
B88-03/B88M-05
B96/B96M-06
B98/B98M-08

B127-05
B148-97 (R2009)
B150/B150M-08

B152/B152M-06a$^{\epsilon 1}$
B160-05 (R2009)
B161-05$^{\epsilon 1}$
B162-99 (R2005)$^{\epsilon 1}$
B164-03 (R2008)
B165-05
B166-08
B167-06
B168-08
B169/B169M-05
B171/B171M-09
B187/B187M-06

B209-07
B210-04
B211-03
B221-08
B241/B241M-02
B247-02a

B265-09a$^{\epsilon 1}$
B280-08
B283-09

B333-03 (R2008)
B335-03 (R2008)
B336-04b
B338-09
B345/B345M-02

B361-08
B363-06a
B366-10a
B371/B371M-08
B381-09

B407-08a
B409-06$^{\epsilon 1}$
B423-05
B424-05
B425-99 (R2005)
B435-06
B443-00 (R2005)
B444-06
B446-03 (R2008)

B462-10$^{\epsilon 1}$
B463-04
B464-05

ASTM Specifications (Cont'd)

B466/B466M-07
B467-88 (R2003)
B491/B491M-06
B493/B493M-08
B514-05
B517-05
B523/B523M-07
B547/B547M-02
B550/B550M-07

B551/B551M-07
B564-11
B572-06
B574-10
B575-10
B581-02 (R2008)
B582-07
B584-08a

B619-10$^{\epsilon 1}$
B620-03 (R2008)
B621-02 (R2006)
B622-10
B625-05
B626-10
B649-06

B658/B658M-06
B668-05
B675-02 (R2007)
B688-96 (R2009)
B690-02 (R2007)

B705-05
B709-04
B725-05
B729-05
B804-02 (R2007)
B813-10
B828-02
B861-08a
B862-08a

C14-07
C301-04
C361-08

C582-09
C599-91 (R1995)

D1527-99 (R2005)
D1600-08
D1694-95 (R2000)
D1785-06

D2235-04
D2239-03
D2241-05
D2282-99$^{\epsilon 1}$
D2310-06
D2321-08

ASTM Specifications (Cont'd)

D2447-03
D2464-06
D2466-06
D2467-06
D2468-96a

D2513-09
D2517-06
D2564-04$^{\epsilon 1}$
D2609-02 (R2008)
D2657-07
D2662-96a
D2666-96a
D2672-96a (R2003)
D2683-04
D2737-03

D2837-08
D2846/D2846M-09b
D2855-96 (R2002)
D2992-06
D2996-01 (R2007)$^{\epsilon 1}$
D2997-01 (R2007)$^{\epsilon 1}$
D3000-95a

D3035-08
D3139-98 (R2005)
D3261-03
D3309-96a (R2002)

D3517-06
D3754-06
D3839-08
D3840-01 (R2005)

D4024-05
D4161-01 (R2005)

D5421-05
D5685-05
D6041-97 (R2002)

E94-04
E112-10
E114-10
E125-63 (R2008)
E155-05
E165-09
E186-10
E213-09
E272-10
E280-10
E310-10
E446-10
E709-08

F336-02 (R2009)
F437-09
F438-09
F439-09
F441/F441M-09

Copyright © 2015 by the American Society of Mechanical Engineers.
No reproduction may be made of this material without written consent of ASME.

REFERENCE STANDARDS (CONT'D)

ASTM Specifications (Cont'd)

F442/F442M-09
F493-04
F714-08

F1055-98 (R2006)
F1281-03$^{\epsilon 1}$
F1282-03$^{\epsilon 1}$
F1290-98a (R2004)
F1412-09
F1498-08
F1545-97 (R2003)
F1673-04
F1970-05
F1974-04
F2389-07$^{\epsilon 1}$

AISC Publication

325-05 (Steel Construction Manual, 2006)

ASCE Standard

ASCE 7-05

ASME Codes (Use Latest Edition)

ASME Boiler and Pressure Vessel Code
- Section II, Part D
- Section III, Division 1
- Section V
- Section VIII, Division 1
- Section VIII, Division 2
- Section VIII, Division 3
- Section IX

ASME Standards (Use Latest Edition)

A13.1
B1.1
B1.20.1
B1.20.3
B1.20.7

B16.1
B16.3
B16.4
B16.5
B16.9
B16.10
B16.11
B16.14
B16.15
B16.18
B16.20

B16.21
B16.22
B16.24
B16.25
B16.26

ASME Standards (Cont'd)

B16.34
B16.36
B16.39
B16.42
B16.47
B16.48
B16.50

B18.2.1
B18.2.2

B36.10M
B36.19M

B46.1
BPE
PCC-2
PTC 19.3 TW

API Specifications

5B, 2008
5L, 2009
6D, 2008 with Errata 1–6 and Addenda 1–3
15LE, 2008
15LR, 2001

API Standards

526, 2009
570, 2009
594, 2010
599, 2007
600, 2009

602, 2005
603, 2007
608, 2008
609, 2009

API Recommended Practice

RP 941, 5th Ed., 1997

ASNT Standards

ACCP-CP-1, Revision 7
CP-189-2011

ASQ Standards

Q9000-1: 1994
Q9000-2: 1997
Q9000-3: 1997
Q9001: 2008
Q9002: 1994
Q9003: 1994

AWS Standards

A3.0M/A3.0:2010
A5.1/A5.1M:2004
A5.4/A5.4M:2006
A5.5/A5.5M:2006
A5.8:2004
A5.9/A5.9M:2006
A5.11/A5.11M:2010
A5.14/A5.14M:2009
A5.22:2010
A5.31:2001
QC1:2007

AWWA Standards

C110-03
C111-07
C115-05
C150/A21.50-08
C151/A21.51-04
C200-05
C207-07
C208-07
C300-07
C301-07
C302-04
C500-02

C504-06
C606-11
C900-07 and Errata 2008
C950-07

CEN Technical Report

CEN/TR 14549:2004

CGA Publication

G-4.1-2009

CSA Publication

Z245.1-1998

EJMA Publication

EJMA Standards, 2008

ISO Standard

ISO 15649:2001

MSS Standard Practices

SP-6-2007
SP-9-2008
SP-25-2008
SP-42-2009
SP-43-2008
SP-44-2006

Copyright © 2015 by the American Society of Mechanical Engineers.
No reproduction may be made of this material without written consent of ASME.

REFERENCE STANDARDS (CONT'D)

MSS Standard Practices (Cont'd)

SP-45-2003 (R2008)
SP-51-2007
SP-53-1999 (R2007)
SP-55-2011
SP-58-2002
SP-65-2008
SP-70-2006
SP-71-2005
SP-72-1999
SP-75-2008
SP-78-2005a
SP-79-2004
SP-80-2008
SP-81-2006a
SP-83-2006
SP-85-2002
SP-88-1993 (R2001)
SP-93-2008
SP-95-2006
SP-97-2006

MSS Standard Practices (Cont'd)

SP-105-1996 (R2005)
SP-106-2003
SP-119-2003
SP-122-2005

NACE Publications

MR0103-07
MR0175/ISO 15156-3 Cir2-08
RP0170-04
RP0472-08
37519-85

NFPA Specifications

54/Z223.1-2012
1963-2009

PFI Standards

ES-7-2004
ES-24-2008 (R2010)
ES-48-2008

PPI Technical Report

TR-21-2001

SAE Specifications

J513-1999
J514-2004
J518-1993

GENERAL NOTE: The issue date shown immediately following the hyphen after the number of the standard (e.g., C207-07 and SP-6-2007) is the effective date of the issue (edition) of the standard. Any additional number shown following the issue date and prefixed by the letter "R" is the latest date of reaffirmation [e.g., A5.22-1995 (R2005)].

Copyright © 2015 by the American Society of Mechanical Engineers.
No reproduction may be made of this material without written consent of ASME.

Specifications and standards of the following organizations appear in Appendix E:

AISC American Institute of Steel Construction
One East Wacker Drive, Suite 700
Chicago, Illinois 60601-1802
(312) 670-2400
www.aisc.org

API American Petroleum Institute
Publications and Distribution Section
1220 L Street, NW
Washington, DC 20005-4070
(202) 682-8375
www.api.org

ASCE The American Society of Civil Engineers
1801 Alexander Bell Drive
Reston, Virginia 20191-4400
(703) 295-6300 or (800) 548-2723
www.asce.org

ASME ASME International
Two Park Avenue
New York, New York 10016-5990
(212) 591-8500 or (800) 843-2763
www.asme.org

ASME Order Department
22 Law Drive
Box 2900
Fairfield, New Jersey 07007-2900
(973) 882-1170 or (800) 843-2763

ASNT American Society for Nondestructive Testing, Inc.
P.O. Box 28518
1711 Arlingate Lane
Columbus, Ohio 43228-0518
(614) 274-6003 or (800) 222-2768
www.asnt.org

ASQ American Society for Quality
P.O. Box 3005
Milwaukee, WI 53201
(800) 248-1946
www.asq.org

ASTM American Society for Testing and Materials
(ASTM International)
100 Barr Harbor Drive
West Conshohocken, Pennsylvania
19428-9585
(610) 832-9585
www.astm.org

AWWA American Water Works Association
6666 W. Quincy Avenue
Denver, Colorado 80235
(303) 794-7711 or (800) 926-7337
www.awwa.org

AWS American Welding Society
8669 NW 36 Street, No. 130
Miami, Florida 33166
(305) 443-9353 or (800) 443-9353
www.aws.org

CEN European Committee for Standardization
CEN-CENELEC Management Centre
Avenue Marnix 17, B-1000
Brussels, Belgium
+32 2 550 08 11
www.cen.eu

CGA Compressed Gas Association, Inc.
14501 George Carter Way,
Suite 103
Chantilly, Virginia 20151
(703) 788-2700
www.cganet.com

CSA CSA Group
178 Rexdale Boulevard
Toronto, Ontario
M9W 1R3, Canada
(416) 747-4044 or (800) 463-6727
www.csa-international.org

EJMA Expansion Joint Manufacturers Association
25 North Broadway
Tarrytown, New York 10591
(914) 332-0040
www.ejma.org

ISO International Organization for Standardization
1, ch. de la Voie-Creuse
Case postale 56
CH-1211 Genève 20
Switzerland/Suisse
+41 22 749 01 11
www.iso.org

MSS Manufacturers Standardization Society of the Valve
and Fittings Industry, Inc.
127 Park Street, NE
Vienna, Virginia 22180-4602
(703) 281-6613
www.mss-hq.com

NACE NACE International
1440 South Creek Drive
Houston, Texas 77084-4906
(281) 228-6200
www.nace.org

NFPA National Fire Protection Association
1 Batterymarch Park
Quincy, Massachusetts 02169-7471
(617) 770-3000 or (800) 344-3555
www.nfpa.org

PFI Pipe Fabrication Institute
655-32nd Avenue, Suite 201
Lachine, Quebec H8T 3G6
Canada
(514) 634-3434
www.pfi-institute.org

Copyright © 2015 by the American Society of Mechanical Engineers.
No reproduction may be made of this material without written consent of ASME.

PPI Plastics Pipe Institute
105 Decker Court, Suite 825
Irving, Texas 75062
(469) 499-1044
www.plasticpipe.org

SAE Society of Automotive Engineers
(SAE International)
400 Commonwealth Drive
Warrendale, Pennsylvania 15096-0001
(724) 776-4841 or (877) 606-7323
www.sae.org

SEMI Semiconductor Equipment and Materials
International
3081 Zanker Road
San Jose, California 95134
(408) 943-6900
www.semi.org

GENERAL NOTE TO LIST OF ORGANIZATIONS: Some of the organizations listed above publish standards that have been approved as American National Standards. Copies of these standards may also be obtained from:

ANSI American National Standards Institute, Inc.
25 West 43rd Street
New York, New York 10036
(212) 642-4900
www.ansi.org

Copyright © 2015 by the American Society of Mechanical Engineers.
No reproduction may be made of this material without written consent of ASME.

APPENDIX F
PRECAUTIONARY CONSIDERATIONS

F300 GENERAL

This Appendix provides guidance in the form of precautionary considerations relating to particular fluid services and piping applications. These are not Code requirements but should be taken into account as applicable in the engineering design. Further information on these subjects can be found in the literature.

F301 DESIGN CONDITIONS

Selection of pressures, temperatures, forces, and other conditions that may apply to the design of piping can be influenced by unusual requirements that should be considered when applicable. These include but are not limited to the following.

F301.4 Ambient Effects

Where fluids can be trapped (e.g., in double seated valves) and subjected to heating and consequent expansion, means of pressure relief should be considered to avoid excessive pressure buildup.

F301.5 Dynamic Effects

geysering: an effect that can occur in piping handling fluids at or near their boiling temperatures under conditions when rapid evolution of vapor within the piping causes rapid expulsion of liquid. In such cases, a pressure surge can be generated that may be destructive to the piping. (Geysering usually is associated with vertical pipelines but may occur in inclined lines under certain conditions.)

F301.7 Thermal Expansion and Contraction Effects

bowing during cooldown: an effect that can occur, usually in horizontal piping, on introduction of a fluid at or near its boiling temperature and at a flow rate that allows stratified two-phase flow, causing large circumferential temperature gradients and possibly unacceptable stresses at anchors, supports, guides, and within pipe walls. (Two-phase flow can also generate excessive pressure oscillations and surges that may damage the piping.)

F301.10 Cyclic Effects

F301.10.1 Pressure Cycling. The rules in para. K304.8 may be considered where fatigue due to pressure cycling is a concern.

F301.10.2 Thermal Fatigue at Mixing Points. Consideration should be given to the potential for thermal fatigue on surfaces exposed to the fluid when mixing fluids of different temperatures (e.g., cold droplets impinging on the pipe wall of a hot gas stream).

F301.11 Condensation Effects

Where there is a possibility of condensation occurring inside gaseous fluid piping, means should be considered to provide drainage from low areas to avoid damage from water hammer or corrosion.

F304 PRESSURE DESIGN

F304.7 Pressure Design of Other Metallic Components

F304.7.4 Expansion Joints. The following are specific considerations to be evaluated by the designer when specifying expansion joint requirements, in addition to the guidelines given in EJMA Standards:

(a) susceptibility to stress corrosion cracking of the materials of construction, considering specific alloy content, method of manufacture, and final heat treated condition.

(b) consideration of not only the properties of the flowing medium but also the environment external to the expansion joint and the possibility of condensation or ice formation due to the operation of the bellows at a reduced temperature.

(c) consideration of specifying a minimum bellows or ply thickness. The designer is cautioned that requiring excessive bellows thickness may reduce the fatigue life of the expansion joint and increase end reactions.

(d) accessibility of the expansion joint for maintenance and inspection.

(e) need for leak tightness criteria for mechanical seals on slip type joints.

(f) specification of installation procedures and shipping or preset bars so that the expansion joint will not be extended, compressed, or offset to compensate for improper alignment of piping, other than the intentional offset specified by the piping designer.

(g) need to request data from the expansion joint manufacturer, including

(1) effective thrust area

(2) lateral, axial, and rotational stiffness (spring constant)

Copyright © 2015 by the American Society of Mechanical Engineers.
No reproduction may be made of this material without written consent of ASME.

(3) calculated design cycle life under specified design conditions

(4) friction force in hinges, tie rods, etc.

(5) installed length and weight

(6) requirements for additional support or restraint in the piping

(7) expansion joint elements that are designed to be uninsulated during operation

(8) certification of pressure containing and/or restraining materials of construction

(9) maximum test pressure

(10) design calculations

F307 VALVES

(a) Extended bonnet valves are recommended where necessary to establish a temperature differential between the valve stem packing and the fluid in the piping, to avoid packing leakage and external icing or other heat flux problems. The valve should be positioned to provide this temperature differential. Consideration should be given to possible packing shrinkage in low temperature fluid service.

(b) The effect of external loads on valve operability and leak tightness should be considered.

F308 FLANGES AND GASKETS

F308.2 Specific Flanges

Slip-On Flanges. The need for venting the space between the welds in double-welded slip-on flanges should be considered for fluid services (including vacuum) that require leak testing of the inner fillet weld, or when fluid handled can diffuse into the enclosed space, resulting in possible failure.

F308.4 Gaskets

(a) Gasket materials not subject to cold flow should be considered for use with raised face flanges for fluid services at elevated pressures with temperatures significantly above or below ambient.

(b) Use of full face gaskets with flat faced flanges should be considered when using gasket materials subject to cold flow for low pressure and vacuum services at moderate temperatures. When such gasket materials are used in other fluid services, the use of tongue-and-groove or other gasket-confining flange facings should be considered.

(c) The effect of flange facing finish should be considered in gasket material selection.

F309 BOLTING

F309.1 General

The use of controlled bolting procedures should be considered in high, low, and cycling temperature services, and under conditions involving vibration or fatigue, to reduce

(a) the potential for joint leakage due to differential thermal expansion

(b) the possibility of stress relaxation and loss of bolt tension

F312 FLANGED JOINTS

F312.1 General

Three distinct elements of a flanged joint must act together to provide a leak-free joint — the flanges, the gasket, and the bolting. Factors that affect performance include the following:

(a) Selection and Design

(1) consideration of service conditions (including external loads, bending moments, and application of thermal insulation)

(2) flange rating, type, material, facing, and facing finish (see para. F308.2)

(3) gasket type, material, thickness, and design (see para. F308.4)

(4) bolt material, strength (cold and at temperature), and specifications for tightening of bolts (see para. F309.1)

(5) design for access to the joint

(b) Installation

(1) condition of flange mating surfaces

(2) joint alignment and gasket placement before boltup

(3) implementation of specified bolting procedures

F321 PIPING SUPPORT

F321.4 Wear of Piping at Support Points

The use of pads or other means of pipe attachment at support points should be considered for piping systems subject to wear and pipe wall metal loss from relative movement between the pipe and its supports (e.g., from wave action on offshore production applications).

F322 DESIGN CONSIDERATIONS FOR SPECIFIC SYSTEMS

F322.6 Pressure Relief Piping

Stop Valves in Pressure Relief Piping. If stop valves are located in pressure relief piping in accordance with para. 322.6.1(a), and if any of these stop valves are to be closed while the equipment is in operation, an authorized person should be present. The authorized person should remain in attendance at a location where the operating pressure can be observed and should have access to means for relieving the system pressure in the event of overpressure. Before leaving the station the authorized person should lock or seal the stop valves in the open position.

Copyright © 2015 by the American Society of Mechanical Engineers.
No reproduction may be made of this material without written consent of ASME.

F323 MATERIALS

(a) Selection of materials to resist deterioration in service is not within the scope of this Code. However, suitable materials should be specified or selected for use in piping and associated facilities not covered by this Code but that affect the safety of the piping. Consideration should be given to allowances made for temperature and pressure effects of process reactions, for properties of reaction or decomposition products, and for hazards from instability of contained fluids. Consideration should be given to the use of cladding, lining, or other protective materials to reduce the effects of corrosion, erosion, and abrasion.

(b) Information on material performance in corrosive environments can be found in publications, such as "The Corrosion Data Survey" published by the National Association of Corrosion Engineers.

F323.1 General Considerations

The following are some general considerations that should be evaluated when selecting and applying materials in piping (see also para. FA323.4):

(a) the possibility of exposure of the piping to fire and the melting point, degradation temperature, loss of strength at elevated temperature, and combustibility of the piping material under such exposure

(b) the susceptibility to brittle failure or failure from thermal shock of the piping material when exposed to fire or to fire-fighting measures, and possible hazards from fragmentation of the material in the event of failure

(c) the ability of thermal insulation to protect piping against failure under fire exposure (e.g., its stability, fire resistance, and ability to remain in place during a fire)

(d) the susceptibility of the piping material to crevice corrosion under backing rings, in threaded joints, in socket welded joints, and in other stagnant, confined areas

(e) the possibility of adverse electrolytic effects if the metal is subject to contact with a dissimilar metal

(f) the compatibility of lubricants or sealants used on threads with the fluid service

(g) the compatibility of packing, seals, and O-rings with the fluid service

(h) the compatibility of materials, such as cements, solvents, solders, and brazing materials, with the fluid service

(i) the chilling effect of sudden loss of pressure on highly volatile fluids as a factor in determining the lowest expected service temperature

(j) the possibility of pipe support failure resulting from exposure to low temperatures (which may embrittle the supports) or high temperatures (which may weaken them)

(k) the compatibility of materials, including sealants, gaskets, lubricants, and insulation, used in strong oxidizer fluid service (e.g., oxygen or fluorine)

(l) the possibility of adverse effects from microbiologically influenced corrosion (MIC) or its remediation

F323.2 Temperature Limitations (14)

F323.2.2 Lower Temperature Limits. Regarding materials considered for use at a lower exemption temperature without impact testing using para. 323.2.2(d)(1), the simplified rules of para. 323.2.2 should not be used for piping systems that are anticipated to experience shock loading or thermal bowing, or if they contain welds between dissimilar materials, especially welds between austenitic and ferritic materials. More rigorous means of testing or analysis should be used for such piping systems. For example, the additional stress due to circumferential shear near a dissimilar weld due to differential thermal contraction and its effect on the combined stress should be determined.

The modulus of elasticity for the condition under consideration should be used when evaluating the reactions.

Cold springing or misalignment can result in significant stresses in the ambient condition. The designer is responsible for ensuring that such stresses are accounted for before any credit is taken for reduction in minimum design temperature without impact testing.

F323.4 Specific Material Considerations — Metals

The following are some specific considerations that should be evaluated when applying certain metals in piping:

(a) Irons — Cast, Malleable, and High Silicon (14.5%). Their lack of ductility and their sensitivity to thermal and mechanical shock.

(b) Carbon Steel, and Low and Intermediate Alloy Steels

(1) the possibility of embrittlement when handling alkaline or strong caustic fluids

(2) the possible conversion of carbides to graphite during long time exposure to temperatures above 427°C (800°F) of carbon steels, plain nickel steel, carbon-manganese steel, manganese-vanadium steel, and carbon-silicon steel

(3) the possible conversion of carbides to graphite during long time exposure to temperatures above 468°C (875°F) of carbon-molybdenum steel, manganese-molybdenum-vanadium steel, and chromium-vanadium steel

(4) the advantages of silicon-killed carbon steel (0.1% silicon minimum) for temperatures above 482°C (900°F)

(5) the possibility of damage due to hydrogen exposure at elevated temperature (see API RP 941); hydrogen

Copyright © 2015 by the American Society of Mechanical Engineers.
No reproduction may be made of this material without written consent of ASME.

damage (blistering) may occur at lower temperatures under exposure to aqueous acid solutions[1]

(6) the possibility of stress corrosion cracking when exposed to cyanides, acids, acid salts, or wet hydrogen sulfide; a maximum hardness limit is usually specified (see NACE MR0175 or MR0103 and RP0472)[1]

(7) the possibility of sulfidation in the presence of hydrogen sulfide at elevated temperatures

(c) High Alloy (Stainless) Steels

(1) the possibility of stress corrosion cracking of austenitic stainless steels exposed to media such as chlorides and other halides either internally or externally; the latter can result from improper selection or application of thermal insulation, or from use of marking inks, paints, labels, tapes, adhesives, and other accessory materials containing chlorides or other halides

(2) the susceptibility to intergranular corrosion of austenitic stainless steels sensitized by exposure to temperatures between 427°C and 871°C (800°F and 1,600°F); as an example, stress corrosion cracking of sensitized metal at room temperature by polythionic acid (reaction of oxidizable sulfur compound, water, and air); stabilized or low carbon grades may provide improved resistance (see NACE RP0170)[1]

(3) the susceptibility to intercrystalline attack of austenitic stainless steels on contact with liquid metals (including aluminum, antimony, bismuth, cadmium, gallium, lead, magnesium, tin, and zinc) or their compounds

(4) the brittleness of ferritic stainless steels at room temperature after service at temperature above 371°C (700°F)

(d) Nickel and Nickel Base Alloys

(1) the susceptibility to grain boundary attack of nickel and nickel base alloys not containing chromium when exposed to small quantities of sulfur at temperatures above 316°C (600°F)

(2) the susceptibility to grain boundary attack of nickel base alloys containing chromium at temperatures above 593°C (1,100°F) under reducing conditions and above 760°C (1,400°F) under oxidizing conditions

(3) the possibility of stress corrosion cracking of nickel-copper Alloy 400 in hydrofluoric acid vapor in the presence of air, if the alloy is highly stressed (including residual stresses from forming or welding)

(e) Aluminum and Aluminum Alloys

(1) the compatibility with aluminum of thread compounds used in aluminum threaded joints to prevent seizing and galling

(2) the possibility of corrosion from concrete, mortar, lime, plaster, or other alkaline materials used in buildings or structures

(3) the susceptibility of Alloy Nos. 5083, 5086, 5154, and 5456 to exfoliation or intergranular attack; and the upper temperature limit of 66°C (150°F) shown in Appendix A to avoid such deterioration

(f) Copper and Copper Alloys

(1) the possibility of dezincification of brass alloys

(2) the susceptibility to stress-corrosion cracking of copper-based alloys exposed to fluids such as ammonia or ammonium compounds

(3) the possibility of unstable acetylide formation when exposed to acetylene

(g) Titanium and Titanium Alloys. The possibility of deterioration of titanium and its alloys above 316°C (600°F).

(h) Zirconium and Zirconium Alloys. The possibility of deterioration of zirconium and zirconium alloys above 316°C (600°F).

(i) Tantalum. Above 299°C (570°F), the possibility of reactivity of tantalum with all gases except the inert gases. Below 299°C, the possibility of embrittlement of tantalum by nascent (monatomic) hydrogen (but not molecular hydrogen). Nascent hydrogen is produced by galvanic action, or as a product of corrosion by certain chemicals.

(j) Metals With Enhanced Properties. The possible loss of strength, in a material whose properties have been enhanced by heat treatment, during long-continued exposure to temperatures above its tempering temperature.

(k) The desirability of specifying some degree of production impact testing, in addition to the weld procedure qualification tests, when using materials with limited low temperature service experience below the minimum temperature stated in Table A-1.

F331 HEAT TREATMENT

F331.1 Heat Treatment Considerations

Heat treatment temperatures listed in Table 331.1.1 for some P-No. 4 and P-No. 5 materials may be higher than the minimum tempering temperatures specified in the ASTM specifications for the base material. For higher-strength normalized and tempered materials, there is consequently a possibility of reducing tensile properties of the base material, particularly if long holding times at the higher temperatures are used.

[1] Titles of referenced documents are

API RP 941, Steels for Hydrogen Service at Elevated Temperatures and Pressures in Petroleum Refineries and Petrochemical Plants

NACE MR0103, Materials Resistant to Sulfide Stress Cracking in Corrosive Petroleum Refining Environments

NACE MR0175, Sulfide Stress-Cracking Resistant Metallic Materials for Oil Field Equipment

NACE RP0472, Methods and Controls to Prevent In-Service Cracking of Carbon Steel (P-1) Welds in Corrosive Petroleum Refining Environments

NACE RP0170, Protection of Austenitic Stainless Steel in Refineries Against Stress Corrosion Cracking by Use of Neutralizing Solutions During Shutdown

Copyright © 2015 by the American Society of Mechanical Engineers.
No reproduction may be made of this material without written consent of ASME.

F335 ASSEMBLY AND ERECTION

(14) **F335.9 Cleaning of Piping**

The following are some general considerations that may be evaluated in determining the need for cleaning of piping:

(a) requirements of the service, including possible contaminants and corrosion products during fabrication, assembly, storage, erection, and testing.

(b) for low temperature service, removal of moisture, oil, grease, and other contaminants to prevent sticking of valves or blockage of piping and small cavities.

(c) for strong oxidizer fluid service (e.g., oxygen or fluorine), special cleaning and inspection. Reference may be made to the Compressed Gas Association's Pamphlet G-4.1 Cleaning Equipment for Oxygen Service.

(d) purging, flushing, or blowing down unwanted dirt, debris, and residual fluid from the inside of a piping system should be performed with caution and control. It is left to the discretion, knowledge, and responsibility of the owner or designer as to the degree of caution and control necessary for a safe work environment. The fluid selected for the purpose of purging, flushing, or blowing down shall preferably be inert. However, for cases in which the use of a flammable or toxic fluid is unavoidable, e.g., when displacing residual testing or flushing fluid with the service fluid, the implementation of additional precautionary considerations may be necessary. Those precautionary considerations should include

(1) the discharge of liquids to a safe collection point

(2) the discharge of flammable liquids away from ignition sources and personnel

(3) venting of gases to a safe outdoor location

(4) venting of flammable gases away from ignition sources and personnel

(5) further protection of personnel via controlled access of the work area, including perimeter warning signs for personnel not involved in the purging process

(6) for precautionary requirements and recommendations regarding the displacement of flushing and testing fluids using a flammable gas, refer to ANSI Z223.1/NFPA 54, National Fuel Gas Code

F335.10 Identification of Piping

Consideration should be given to identifying the contents of piping, with special consideration given to piping conveying flammable, hazardous, or fire-quenching fluids. Reference may be made to ASME A13.1, Scheme for the Identification of Piping Systems.

F345 TESTING

F345.4 Hydrostatic Leak Test

F345.4.1 Test Fluid. Consideration should be given to susceptibility to microbiologically influenced corrosion (MIC). This condition is especially prevalent in no-flow, high moisture environments. Internal MIC may also depend on the characteristics of the treated or untreated test fluid.

Internal MIC may be lessened or possibly eliminated by properly draining and drying systems and/or by proper selection of test fluid.

F345.5 Pneumatic Leak Test

F345.5.1 Precautions. Consideration should be given to the risk associated with the release of stored energy and to the establishment of the minimum safe distance between personnel and the equipment being tested. Equations and considerations are available in ASME PCC-2, Repair of Pressure Equipment and Piping, Article 5.1.

FA323 MATERIALS

FA323.4 Material Considerations — Nonmetals

The following are some considerations to be evaluated when applying nonmetals in piping. See also paras. F323 and F323.1.

(a) Static Charges. Because of the possibility of producing hazardous electrostatic charges in nonmetallic piping and metallic piping lined with nonmetals, consideration should be given to grounding such systems conveying nonconductive fluids.

(b) Compressed Gases. If nonmetallic piping is used above ground for compressed air or other compressed gases, special precautions should be observed. In determining the needed safeguarding for such services, the energetics and the specific failure mechanism need to be evaluated. Encasement of the plastic piping in shatter-resistant material may be considered.

(c) Brittle Piping. If borosilicate glass or other brittle piping material is used, take into account its lack of ductility and its sensitivity to thermal and mechanical shock.

FU315 HYGIENIC CLAMP JOINTS

To lower the probability of leaks in piping that is subject to transient temperature and pressure fluctuations, consider the use of a two-bolt clamp to increase clamping force in lieu of a hinged clamp for those processes that require

(a) passivation

(b) clean-in-place (CIP)

(c) steam- (or sterilize-) in-place (SIP)

Copyright © 2015 by the American Society of Mechanical Engineers.
No reproduction may be made of this material without written consent of ASME.

APPENDIX G
SAFEGUARDING

G300 SCOPE

(a) Safeguarding is the provision of protective measures to minimize the risk of accidental damage to the piping or to minimize the harmful consequences of possible piping failure.

(b) In most instances, the safeguarding inherent in the facility (the piping, the plant layout, and its operating practices) is sufficient without need for additional safeguarding. In some instances, however, engineered safeguards must be provided.

(c) Appendix G outlines some considerations pertaining to the selection and utilization of safeguarding. Where safeguarding is required by the Code, it is necessary to consider only the safeguarding that will be suitable and effective for the purposes and functions stated in the Code or evident from the designer's analysis of the application.

G300.1 General Considerations

In evaluating a piping installation design to determine what safeguarding may exist or is necessary, the following should be reviewed:

(a) the hazardous properties of the fluid, considered under the most severe combination of temperature, pressure, and composition in the range of expected operating conditions.

(b) the quantity of fluid that could be released by piping failure, considered in relation to the environment, recognizing the possible hazards ranging from large releases of otherwise innocuous fluids to small leakages of toxic fluids.

(c) expected conditions in the environment, evaluated for their possible effect on the hazards caused by a possible piping failure. This includes consideration of ambient or surface temperature extremes, degree of ventilation, proximity of fired equipment, etc.

(d) the probable extent of operating, maintenance, and other personnel exposure, as well as reasonably probable sources of damage to the piping from direct or indirect causes.

(e) the probable need for grounding of static charges to prevent ignition of flammable vapors.

(f) the safety inherent in the piping by virtue of materials of construction, methods of joining, and history of service reliability.

G300.2 Safeguarding by Plant Layout and Operation

Representative features of plant layout and operation that may be evaluated and selectively utilized as safeguarding include

(a) plant layout features, such as open-air process equipment structures; spacing and isolation of hazardous areas; slope and drainage; buffer areas between plant operations and populated communities; or control over plant access

(b) protective installations, such as fire protection systems; barricades or shields; ventilation to remove corrosive or flammable vapors; instruments for remote monitoring and control; containment and/or recovery facilities; or facilities (e.g., incinerators) for emergency disposal of hazardous materials

(c) operating practices, such as restricted access to processing areas; work permit system for hazardous work; or special training for operating, maintenance, and emergency crews

(d) means for safe discharge of fluids released during pressure relief device operation, blowdown, cleanout, etc.

(e) procedures for startup, shutdown, and management of operating conditions, such as gradual pressurization or depressurization, and gradual warmup or cooldown, to minimize the possibility of piping failure, e.g., brittle fracture

G300.3 Engineered Safeguards

Engineered safeguards that may be evaluated and selectively applied to provide added safeguarding include

(a) means to protect piping against possible failures, such as

(1) thermal insulation, shields, or process controls to protect from excessively high or low temperature and thermal shock

(2) armor, guards, barricades, or other protection from mechanical abuse

(3) damping or stabilization of process or fluid flow dynamics to eliminate or to minimize or protect against destructive loads (e.g., severe vibration pulsations, cyclic operating conditions)

(b) means to protect people and property against harmful consequences of possible piping failure, such as confining and safely disposing of escaped fluid by

Copyright © 2015 by the American Society of Mechanical Engineers.
No reproduction may be made of this material without written consent of ASME.

shields for flanged joints, valve bonnets, gages, or sight glasses; or for the entire piping system if of frangible material; limiting the quantity or rate of fluid escaping by automatic shutoff or excess flow valves, additional block valves, flow-limiting orifices, or automatic shutdown of pressure source; limiting the quantity of fluid in process at any time, where feasible

Copyright © 2015 by the American Society of Mechanical Engineers.
No reproduction may be made of this material without written consent of ASME.

APPENDIX H
SAMPLE CALCULATIONS FOR BRANCH REINFORCEMENT

H300 INTRODUCTION (METRIC)

The following examples are intended to illustrate the application of the rules and definitions in para. 304.3.3 for welded branch connections.

H301 EXAMPLE 1

A DN 200 (NPS 8) run (header) in an oil piping system has a DN 100 (NPS 4) branch at right angles (see Fig. H301). Both pipes are Schedule 40 API 5L Grade A seamless. The design conditions are 2 068 kPa at 200°C. The fillet welds at the crotch are minimum size in accordance with para. 328.5.4. A corrosion allowance of 2.5 mm is specified. Is additional reinforcement necessary?

Solution

From Appendix A, $S = 110$ MPa for API 5L Grade A (Table A-1); $E = 1.0$ for API 5L seamless (Table A-1B); $W = 1.0$.

$$T_h = (8.18)(0.875) = 7.16 \text{ mm}$$

$$T_b = (6.02)(0.875) = 5.27 \text{ mm}$$

$$L_4 = (2.5)(7.16 - 2.5) = 11.65 \text{ mm}$$
$$\text{or } (2.5)(5.27 - 2.5) = 6.93 \text{ mm, whichever is less}$$
$$= 6.93 \text{ mm}$$

$$d_1 = [114.3 - (2)(5.27 - 2.5)]/(\sin 90 \text{ deg}) = 108.8 \text{ mm}$$

$$d_2 = (5.27 - 2.5) + (7.16 - 2.5) + 109/2$$
$$= 61.9 \text{ mm}$$

Use d_1 or d_2, whichever is greater.

$$d_1 = 108.8 \text{ mm}$$

$$t_h = \frac{(2\,068)(219.1)}{(2)(110{,}000)(1.0)(1.00) + (2)(0.4)(2\,068)} = 2.04 \text{ mm}$$

$$t_b = \frac{(2\,068)(114.3)}{(2)(110{,}000)(1.0)(1.00) + (2)(0.4)(2\,068)} = 1.07 \text{ mm}$$

$$t_c = (0.7)(6.02) = 4.21 \text{ mm, or 6 mm, whichever is less}$$
$$= 4.21 \text{ mm}$$

Minimum leg dimension of fillet weld

$$4.21/0.707 = 6.0 \text{ mm}$$

Thus, the required area

$$A_1 = (2.04)(108.8)(2 - \sin 90 \text{ deg}) = 222 \text{ mm}^2$$

The reinforcement area in run wall

$$A_2 = (108.8)(7.16 - 2.04 - 2.5) = 285 \text{ mm}^2$$

in branch wall

$$A_3 = (2)(6.93)[(5.27 - 1.07) - 2.5] = 24 \text{ mm}^2$$

in branch welds

$$A_4 = (2)(\tfrac{1}{2})(6.0)^2 = 36 \text{ mm}^2$$

The total reinforcement area = 345 mm^2. This is more than the 222 mm^2 so that no additional reinforcement is required to sustain the internal pressure.

H302 EXAMPLE 2

There is a DN 200 (NPS 8) branch at right angles to a DN 300 (NPS 12) header (Fig. H301). Both run and branch are of aluminum alloy Schedule 80 ASTM B241 6061-T6 seamless pipe. The connection is reinforced by a ring 350 mm O.D. (measured along the run) cut from a piece of DN 300 (NPS 12) Schedule 80 ASTM B241 6063-T6 seamless pipe and opened slightly to fit over the run pipe. Allowable stresses for welded construction apply in accordance with Appendix A, Note (33). The fillet welds have the minimum dimensions permitted in para. 328.5.4. A zero corrosion allowance is specified. What is the maximum permissible design pressure if the design temperature is −195°C?

Solution

From Table A-1, $S = 55.2$ MPa for Grade 6061-T6 (welded) pipe and $S = 39.3$ MPa for Grade 6063-T6 (welded) pad, both at −195°C. From Table A-1B, $E = 1.0$ for ASTM B241; $W = 1.0$.

Copyright © 2015 by the American Society of Mechanical Engineers.
No reproduction may be made of this material without written consent of ASME.

Fig. H301 Illustrations for Metric Examples in Appendix H

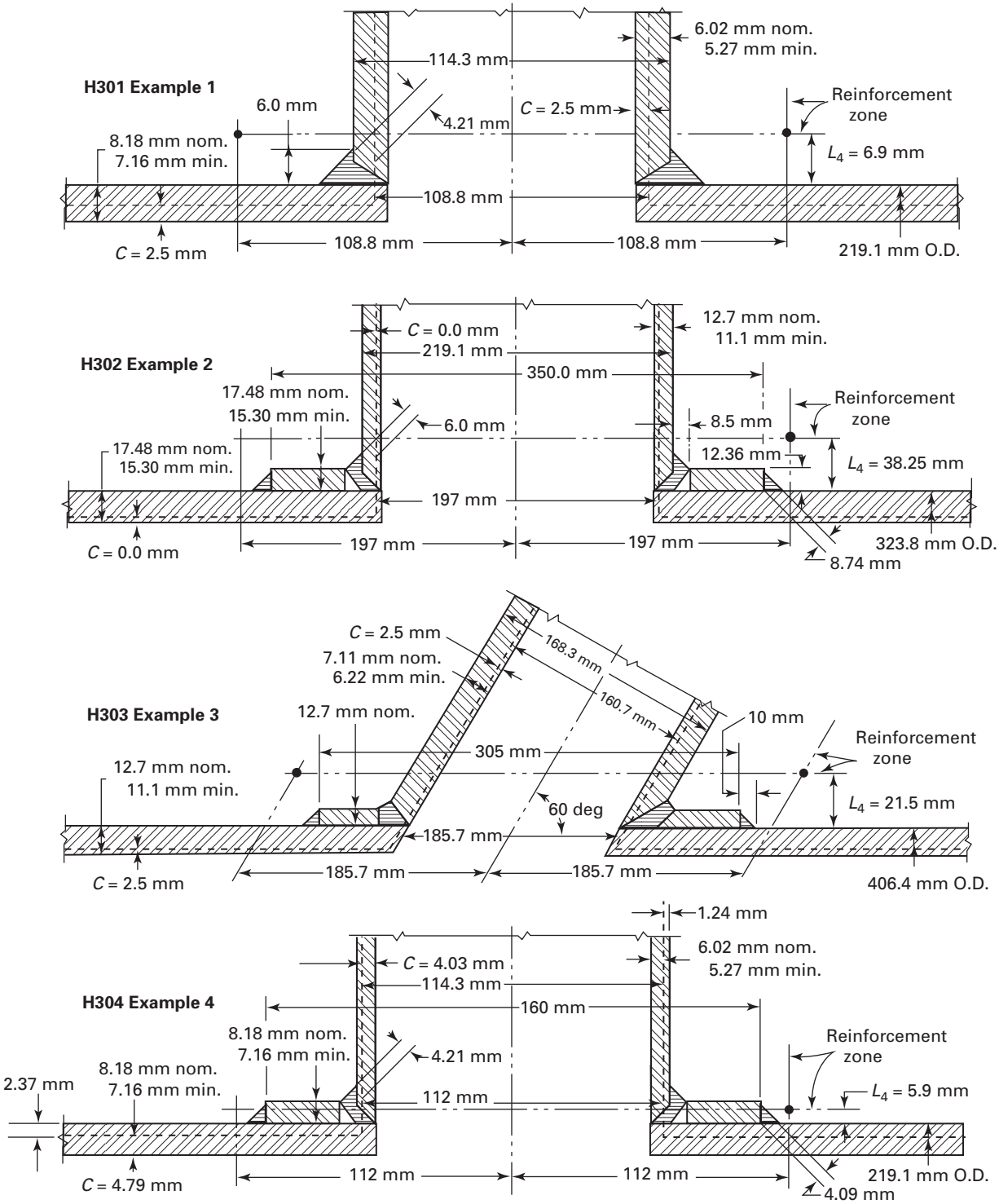

Copyright © 2015 by the American Society of Mechanical Engineers.
No reproduction may be made of this material without written consent of ASME.

Leg dimensions of welds to the branch

$$t_c = \text{lesser of } 0.7\overline{T}_b \text{ or } 6 \text{ mm} = 6 \text{ mm}$$

$$\frac{12.7}{0.707} \text{ or } \frac{6}{0.707} = 8.5 \text{ mm}$$

and to the reinforcing pad

$$\frac{0.5\overline{T}_r}{0.707} = \frac{(0.5)(17.48)}{0.707} = 12.36 \text{ mm}$$

$$T_h = (17.48)(0.875) = 15.3 \text{ mm}$$

$$T_b = (12.7)(0.875) = 11.1 \text{ mm}$$

$$T_t = (17.48)(0.875) = 15.3 \text{ mm}$$

$$L_4 = (2.5)(15.3 - 0.0) = 38.25 \text{ mm}$$

[This is smaller than $(2.5)(11.1 - 0) + 15.3 = 43.05$ mm]

$$d_1 = 219.1 - (2)(11.1 - 0) = 197 \text{ mm}$$

$$d_2 = d_1 \text{ because it is greater than } T_b + T_c + d_1/2$$

$$t_h = \frac{323.8P}{(2)(55\,200)(1.0)(1.0) + (2)(0.4)P}$$

$$t_b = \frac{219.1P}{(2)(55\,200)(1.0)(1.0) + (2)(0.4)P}$$

Using the symbol

$$q = \frac{P}{110{,}400 + 0.8P}$$

we can briefly write

$$t_h = 323.8q \text{ and } t_b = 219.1q$$

The required area

$$A_1 = 197t_h = 63\,789q$$

The reinforcement area in the run wall

$$A_2 = (197)(15.3 - 323.8q - 0)$$

$$= 3\,014 - 63\,789q$$

in branch wall

$$A_3 = (2)(38.25)(11.1 - 219.1q - 0)$$

$$= 849 - 16\,761q$$

in reinforcing ring

$$A_4 = (15.3)(350 - 219.1)(39\,300/55\,200) = 1\,426 \text{ mm}^2$$

in fillet welds

$$A_4 = (2)(1/2)(8.5)^2 + (2)(1/2)(12.36)^2 = 225 \text{ mm}^2$$

The total reinforcement area $= 5\,514 - 80\,550q$.

At the maximum permissible normal operating pressure, the required area and the reinforcement area are equal; thus

$$63\,789q = 5\,514 - 80\,550q$$

$$144\,339q = 5\,514$$

$$q = 0.0382$$

But also

$$q = \frac{P}{(110\,400 + 0.8P)}$$

Thus

$$P = (0.0382)(110\,400 + 0.8P) = 4\,217 + 0.03P$$

$$0.97P = 4\,217$$

$$P = 4\,347 \text{ kPa}$$

H303 EXAMPLE 3

A DN 150 (NPS 6) Schedule 40 branch has its axis at a 60 deg angle to the axis of a DN 400 (NPS 16) Schedule 40 run (header) in an oil piping system (Fig. H301). Both pipes are API 5L Grade A seamless. The connection is reinforced with a ring 305 mm O.D. (measured along the run) made from 12.7 mm ASTM A285 Grade C plate. All fillet welds are equivalent to 45 deg fillet welds with 10 mm legs. Corrosion allowance = 2.5 mm. The design pressure is 3 450 kPa at 370°C. Is the design adequate for the internal pressure?

Solution

From Appendix A, $S = 99.3$ MPa for API 5L Grade A and ASTM A285 Grade C (Table A-1); $E = 1.0$ for API 5L seamless pipe (Table A-1B); $W = 1.0$.

$$T_h = (12.7)(0.875) = 11.1 \text{ mm}$$

$$T_b = (7.11)(0.875) = 6.22 \text{ mm}$$

$$T_r = 12.7 \text{ mm}$$

$$L_4 = \text{lesser of } (2.5)(6.22 - 2.5) + 12.7 = 22 \text{ mm or } (2.5)(11.1 - 2.5) = 21.5 \text{ mm} = 21.5 \text{ mm}$$

$$t_h = \frac{(3\,450)(406.4)}{(2)(99\,300)(1.0)(1.0) + (2)(0.4)(3\,450)} = 6.96 \text{ mm}$$

$$t_b = \frac{(3\,450)(168.3)}{(2)(99\,300)(1.0)(1.0) + (2)(0.4)(3\,450)} = 2.88 \text{ mm}$$

Copyright © 2015 by the American Society of Mechanical Engineers.
No reproduction may be made of this material without written consent of ASME.

$$d_1 = d_2 = \frac{168.3 - (2)(6.22 - 2.5)}{\sin 60 \text{ deg}} = \frac{160.9}{0.866} = 185.7 \text{ mm}$$

The required area

$$A_1 = (6.96)(185.7)(2 - 0.866) = 1\,466 \text{ mm}^2$$

The reinforcement in the run wall

$$A_2 = (185.7)(11.1 - 6.96 - 2.5) = 305 \text{ mm}^2$$

in branch wall

$$A_3 = (2)\left(\frac{21.5}{0.866}\right)(6.22 - 2.88 - 2.5) = 41.7 \text{ mm}^2$$

in ring

$$A_4 = (12.7)\left(305 - \frac{168.3}{0.866}\right) = 1\,405 \text{ mm}^2$$

in fillet welds

$$A_4 = (4)(1/2)(10)^2 = 200 \text{ mm}^2$$

The total reinforcement is

$$200 + 1\,405 + 41.7 + 305 = 1\,952 \text{ mm}^2$$

This total is greater than the 1 466 mm^2, so that no additional reinforcement is required.

H304 EXAMPLE 4

A DN 200 (NPS 8) run (header) in an oil piping system has a DN 100 (NPS 4) branch at right angles (Fig. H301). Both pipes are Schedule 40 API 5L Grade A seamless. The design conditions are 2 400 kPa at 205°C. It is assumed that the piping system is to remain in service until all metal thickness, in both branch and run, in excess of that required by eq. (3a) of para. 304.1.2 has corroded away so that area A_2 as defined in para. 304.3.3(c)(1) is zero. What reinforcement is required for this connection?

Solution

From Appendix A, $S = 110$ MPa for API 5L Grade A (Table A-1); $E = 1.0$ for API 5L seamless (Table A-1B); $W = 1.0$.

$$t_h = \frac{(2\,400)(219.1)}{(2)(110\,000)(1.0)(1.0) + (2)(0.4)(2\,400)} = 2.37 \text{ mm}$$

$$t_b = \frac{(2\,400)(114.3)}{(2)(110\,000)(1.0)(1.0) + (2)(0.4)(2\,400)} = 1.24 \text{ mm}$$

$$d_1 = 114.3 - (2)(1.24) = 112 \text{ mm}$$

Required reinforcement area

$$A_1 = (2.37)(112) = 265 \text{ mm}^2$$

Try fillet welds only

$$L_4 = (2.5)(2.37) = 5.9 \text{ mm}$$

$$\text{or } (2.5)(1.24) = 3.1 \text{ mm}$$

Use 3.1 mm.

Due to limitation in the height at the reinforcement zone, no practical fillet weld size will supply enough reinforcement area; therefore, the connection must be further reinforced. Try a 160 mm O.D. reinforcing ring (measured along the run). Assume the ring to be cut from a piece of DN 200 (NPS 8) Schedule 40 API 5L Grade A seamless pipe and welded to the connection with minimum size fillet welds.

Minimum ring thickness

$$T_r = (8.18)(0.875) = 7.16 \text{ mm}$$

$$\text{New } L_4 = (2.5)(1.24) + 7.16 = 10.3 \text{ mm}$$

$$\text{or } (2.5)(2.37) = 5.9 \text{ mm}$$

Use 5.9 mm.

Reinforcement area in the ring (considering only the thickness within L_4)

$$X_1 = (5.9)(160 - 114.3) = 270 \text{ mm}^2$$

$$\text{Leg dimension of weld} = \frac{(0.5)(8.18)}{0.707} = 5.8 \text{ mm}$$

Reinforcement area in fillet welds

$$X_2 = (2)(1/2)(5.8)^2 = 34 \text{ mm}^2$$

Total reinforcement area

$$A_4 = X_1 + X_2 = 304 \text{ mm}^2$$

This total reinforcement area is greater than the required area; therefore, a reinforcing ring 160 mm O.D., cut from a piece of DN 200 (NPS 8) Schedule 40 API 5L Grade A seamless pipe and welded to the connection with minimum size fillet welds would provide adequate reinforcement for this connection.

H305 EXAMPLE 5 (Not Illustrated)

A DN 40 (NPS 1½) Class 3000 forged steel socket welding coupling has been welded at right angles to a DN 200 (NPS 8) Schedule 40 run (header) in oil service, using a weld conforming to sketch (1) of Fig. 328.5.4D. The run is ASTM A53 Grade B seamless pipe. The design pressure is 2 760 kPa and the design temperature is

Copyright © 2015 by the American Society of Mechanical Engineers.
No reproduction may be made of this material without written consent of ASME.

230°C. The corrosion allowance is 2.5 mm. Is additional reinforcement required?

Solution

No. According to para. 304.3.2(b), the design is adequate to sustain the internal pressure and no calculations are necessary. It is presumed, of course, that calculations have shown the run pipe to be satisfactory for the service conditions according to eqs. (2) and (3).

H310 INTRODUCTION (U.S. CUSTOMARY)

The following examples are intended to illustrate the application of the rules and definitions in para. 304.3.3 for welded branch connections.

H311 EXAMPLE 1

An NPS 8 run (header) in an oil piping system has an NPS 4 branch at right angles (see Fig. H311). Both pipes are Schedule 40 API 5L Grade A seamless. The design conditions are 300 psig at 400°F. The fillet welds at the crotch are minimum size in accordance with para. 328.5.4. A corrosion allowance of 0.10 in. is specified. Is additional reinforcement necessary?

Solution

From Appendix A, $S = 16.0$ ksi for API 5L Grade A (Table A-1); $E = 1.0$ for API 5L seamless (Table A-1B); $W = 1.0$.

$$T_h = (0.322)(0.875) = 0.282 \text{ in.}$$

$$T_b = (0.237)(0.875) = 0.207 \text{ in.}$$

$$L_4 = (2.5)(0.282 - 0.1) = 0.455 \text{ in.}$$
$$\text{or } (2.5)(0.207 - 0.1) + 0 = 0.268 \text{ in., whichever is less}$$
$$= 0.268 \text{ in.}$$

$$d_1 = [4.5 - (2)(0.207 - 0.1)]/\sin 90 \text{ deg} = 4.286 \text{ in.}$$

$$d_2 = (0.207 - 0.1) + (0.282 - 0.1) + 4.286/2$$
$$= 2.432 \text{ in.}$$

Use d_1 or d_2, whichever is greater.

$$d_1 = 4.286 \text{ in.}$$

$$t_h = \frac{(300)(8.625)}{(2)(16{,}000)(1.0)(1.0) + (2)(0.4)(300)} = 0.080 \text{ in.}$$

$$t_b = \frac{(300)(4.500)}{(2)(16{,}000)(1.0)(1.0) + (2)(0.4)(300)} = 0.042 \text{ in.}$$

$$t_c = (0.7)(0.237) = 0.166 \text{ in., or } 0.25\text{, whichever is less}$$
$$= 0.166 \text{ in.}$$

Minimum leg dimension of fillet weld

$$0.166/0.707 = 0.235 \text{ in.}$$

Thus, the required area

$$A_1 = (0.080)(4.286)(2 - \sin 90 \text{ deg}) = 0.343 \text{ sq in.}$$

The reinforcement area in run wall

$$A_2 = (4.286)(0.282 - 0.08 - 0.10) = 0.437 \text{ sq in.}$$

in branch wall

$$A_3 = (2)(0.268)[(0.207 - 0.042) - 0.10] = 0.035 \text{ sq in.}$$

in branch welds

$$A_4 = (2)(\tfrac{1}{2})(0.235)^2 = 0.055 \text{ sq in.}$$

The total reinforcement area = 0.527 sq in. This is more than 0.343 sq in. so that no additional reinforcement is required to sustain the internal pressure.

H312 EXAMPLE 2

There is an NPS 8 branch at right angles to an NPS 12 header (Fig. H311). Both run and branch are of aluminum alloy Schedule 80 ASTM B241 6061-T6 seamless pipe. The connection is reinforced by a ring 14 in. O.D. (measured along the run) cut from a piece of NPS 12 Schedule 80 ASTM B241 6063-T6 seamless pipe and opened slightly to fit over the run pipe. Allowable stresses for welded construction apply in accordance with Appendix A, Note (33). The fillet welds have the minimum dimensions permitted in para. 328.5.4. A zero corrosion allowance is specified. What is the maximum permissible design pressure if the design temperature is −320°F?

Solution

From Table A-1, $S = 8.0$ ksi for Grade 6061-T6 (welded) pipe and $S = 5.7$ ksi for Grade 6063-T6 (welded) pad, both at −320°F. From Table A-1B, $E = 1.0$ for ASTM B241; $W = 1.0$.

Copyright © 2015 by the American Society of Mechanical Engineers.
No reproduction may be made of this material without written consent of ASME.

Fig. H311 Illustrations for U.S. Customary Examples in Appendix H

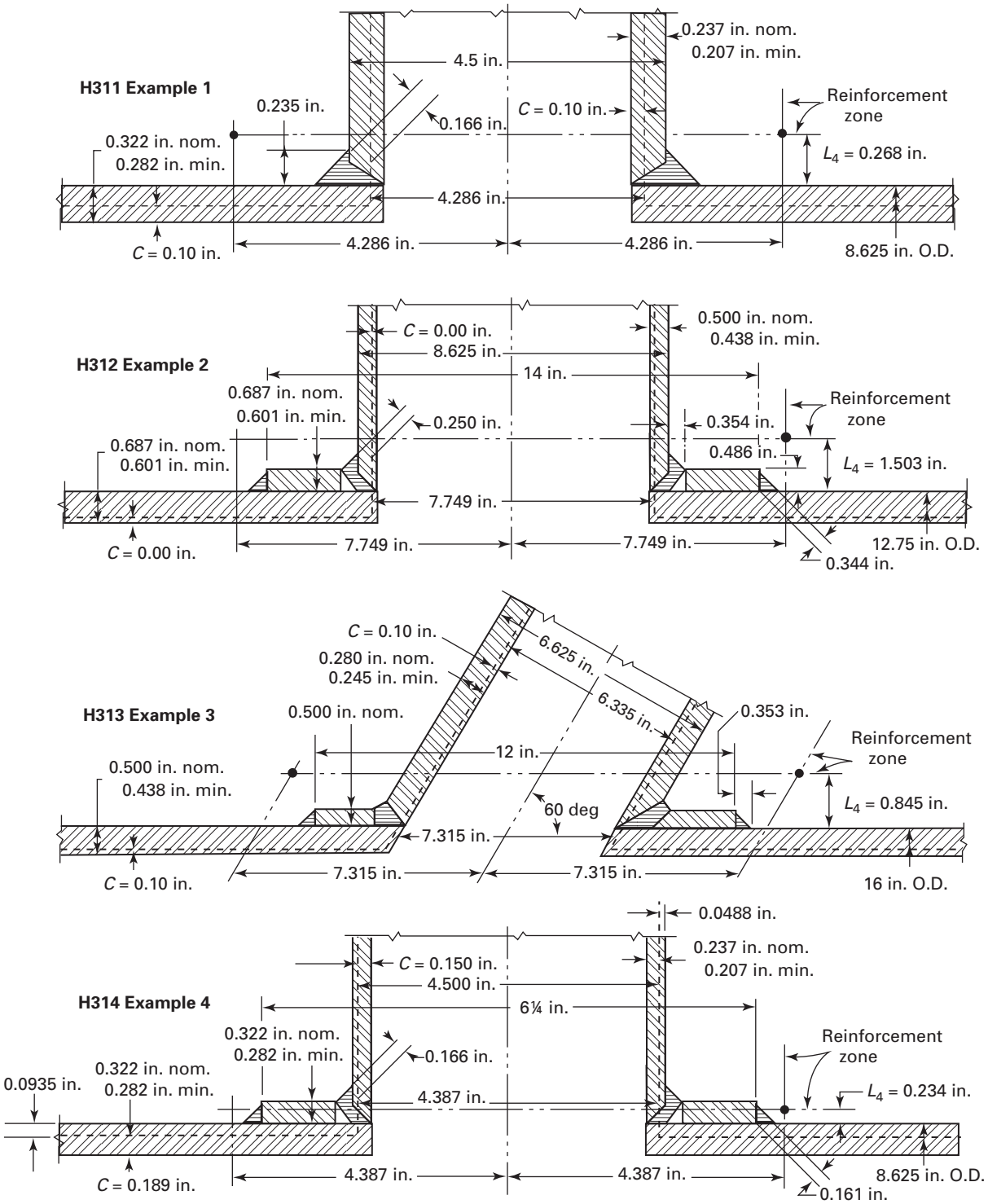

Copyright © 2015 by the American Society of Mechanical Engineers.
No reproduction may be made of this material without written consent of ASME.

Leg dimensions of welds

$$\frac{t_c}{0.707} = \frac{0.250}{0.707} = 0.354 \text{ in.}$$

$$\frac{(0.5)(0.687)}{0.707} = 0.486 \text{ in.}$$

$$T_h = (0.687)(0.875) = 0.601 \text{ in.}$$

$$T_b = (0.500)(0.875) = 0.438 \text{ in.}$$

$$T_r = (0.687)(0.875) = 0.601 \text{ in.}$$

$$L_4 = (2.5)(0.601 - 0.00) = 1.503 \text{ in.}$$

[This is smaller than (2.5)(0.438 − 0.00) + 0.601 = 1.696 in.]

$$d_2 = d_1 = 8.625 - (2)(0.438 - 0.00) = 7.749 \text{ in.}$$

$$t_h = \frac{12.75P}{(2)(8{,}000)(1.0)(1.0) + (2)(0.4)(P)}$$

$$t_b = \frac{8.625P}{(2)(8{,}000)(1.0)(1.0) + (2)(0.4)(P)}$$

Using the symbol

$$q = \frac{P}{16{,}000 + 0.8P}$$

we can briefly write

$$t_h = 12.75q \text{ and } t_b = 8.625q$$

The required area

$$A_1 = 7.749t_h = 98.80q$$

The reinforcement area in run wall

$$A_2 = (7.749)(0.601 - 12.75q - 0.00)$$

$$= 4.657 - 98.80q$$

in branch wall

$$A_3 = (2)(1.503)(0.438 - 8.625q - 0.00)$$

$$= 1.317 - 25.93q$$

in ring

$$A_4 = (0.601)(14 - 8.625)(5{,}700/8{,}000) = 2.302$$

in fillet welds

$$A_4 = (2)(\tfrac{1}{2})(0.354)^2 + (2)(\tfrac{1}{2})(0.486)^2 = 0.362$$

The total reinforcement area = 8.638 − 124.73q.

At the maximum permissible normal operating pressure, the required area and the reinforcement area are equal; thus

$$98.80q = 8.638 - 124.73q$$

$$223.53q = 8.638$$

$$q = 0.0386$$

But also

$$q = \frac{P}{16{,}000 + 0.8P}$$

Thus

$$P = (0.0386)(16{,}000 + 0.8P) = 618.3 + 0.0309P$$

$$0.961P = 618.3$$

$$P = 643.1 \text{ psig}$$

which is the maximum permissible design pressure.

H313 EXAMPLE 3

An NPS 6 Schedule 40 branch has its axis at a 60 deg angle to the axis of an NPS 16 Schedule 40 run (header) in an oil piping system (Fig. H311). Both pipes are API 5L Grade A seamless. The connection is reinforced with a ring 12 in. O.D. (measured along the run) made from ½ in. ASTM A285 Grade C plate. All fillet welds are equivalent to 45 deg fillet welds with ⅜ in. legs. Corrosion allowance = 0.10 in. The design pressure is 500 psig at 700°F. Is the design adequate for the internal pressure?

Solution

From Appendix A, S = 14.4 ksi for API 5L Grade A and ASTM A285 Grade C (Table A-1); E = 1.0 for API 5L seamless pipe (Table A-1B); W = 1.0.

$$T_h = (0.500)(0.875) = 0.438 \text{ in.}$$

$$T_b = (0.280)(0.875) = 0.245 \text{ in.}$$

$$T_r = 0.500 \text{ in.}$$

$$L_4 = (2.5)(0.245 - 0.10) + 0.500 = 0.8625$$

Copyright © 2015 by the American Society of Mechanical Engineers.
No reproduction may be made of this material without written consent of ASME.

This is greater than 2.5(0.438 − 0.10) = 0.845 in.

$$t_h = \frac{(500)(16)}{(2)(14{,}400)(1.0)(1.0) + (2)(0.4)(500)} = 0.274 \text{ in.}$$

$$t_b = \frac{(500)(6.625)}{(2)(14{,}400)(1.0)(1.0) + (2)(0.4)(500)} = 0.113 \text{ in.}$$

$$d_2 = d_1 = \frac{6.625 - (2)(0.245 - 0.10)}{\sin 60 \text{ deg}} = \frac{6.335}{0.866} = 7.315 \text{ in.}$$

The required area

$$A_1 = (0.274)(7.315)(2 - 0.866) = 2.27 \text{ sq in.}$$

The reinforcement in the run wall

$$A_2 = (7.315)(0.438 - 0.274 - 0.10) = 0.468 \text{ sq in.}$$

in branch wall

$$A_3 = (2)\left(\frac{0.845}{0.866}\right)(0.245 - 0.113 - 0.10) = 0.062 \text{ sq in.}$$

in ring

$$A_4 = (0.500)\left(12 - \frac{6.625}{0.866}\right) = 2.175 \text{ sq in.}$$

in fillet welds

$$A_4 = (4)(1/2)(3/8)^2 = 0.281 \text{ sq in.}$$

The total reinforcement = 2.986 sq in. This total is greater than 2.27 sq in., so that no additional reinforcement is required.

H314 EXAMPLE 4

An NPS 8 run (header) in an oil piping system has an NPS 4 branch at right angles (Fig. H311). Both pipes are Schedule 40 API 5L Grade A seamless. The design conditions are 350 psig at 400°F. It is assumed that the piping system is to remain in service until all metal thickness, in both branch and run, in excess of that required by eq. (3a) of para. 304.1.2 has corroded away so that area A_2 as defined in para. 304.3.3(c)(1) is zero. What reinforcement is required for this connection?

Solution

From Appendix A, S = 16.0 ksi for API 5L Grade A (Table A-1); E = 1.0 for API 5L seamless (Table A-1B); W = 1.0.

$$t_h = \frac{(350)(8.625)}{(2)(16{,}000)(1.0)(1.0) + (2)(0.4)(350)} = 0.0935 \text{ in.}$$

$$t_b = \frac{(350)(4.500)}{(2)(16{,}000)(1.0)(1.0) + (2)(0.4)(350)} = 0.0488 \text{ in.}$$

$$d_1 = 4.500 - (2)(0.0488) = 4.402 \text{ in.}$$

Required reinforcement area

$$A_1 = (0.0935)(4.402) = 0.412 \text{ sq in.}$$

Try fillet welds only

$$L_4 = (2.5)(0.0935) = 0.234 \text{ in.}$$

$$\text{or } (2.5)(0.0488) = 0.122 \text{ in.}$$

Use 0.122 in.

Due to limitation in the height at the reinforcement zone, no practical fillet weld size will supply enough reinforcement area; therefore, the connection must be further reinforced. Try a 6¼ in. O.D. reinforcing ring (measured along the run). Assume the ring to be cut from a piece of NPS 8 Schedule 40 API 5L Grade A seamless pipe and welded to the connection with minimum size fillet welds.

Minimum ring thickness

$$T_r = (0.322)(0.875) = 0.282 \text{ in.}$$

$$\text{New } L_4 = (2.5)(0.0488) + 0.282 = 0.404 \text{ in.}$$

$$\text{or } (2.5)(0.0935) = 0.234 \text{ in.}$$

Use 0.234 in.

Reinforcement area in the ring (considering only the thickness within L_4)

$$X_1 = (0.234)(6.25 - 4.5) = 0.410 \text{ sq in.}$$

$$\text{Leg dimension of weld} = \frac{(0.5)(0.322)}{0.707} = 0.228 \text{ in.}$$

Reinforcement area in fillet welds

$$X_2 = (2)(1/2)(0.228)^2 = 0.052 \text{ sq in.}$$

Total reinforcement area

$$A_4 = X_1 + X_2 = 0.462 \text{ sq in.}$$

This total reinforcement area is greater than the required area; therefore, a reinforcing ring 6¼ in. O.D., cut from a piece of NPS 8 Schedule 40 API 5L Grade A seamless pipe and welded to the connection with minimum size fillet welds would provide adequate reinforcement for this connection.

H315 EXAMPLE 5 (Not Illustrated)

An NPS 1½ Class 3000 forged steel socket welding coupling has been welded at right angles to an NPS 8 Schedule 40 run (header) in oil service, using a weld conforming to sketch (1) of Fig. 328.5.4D. The run is ASTM A53 Grade B seamless pipe. The design pressure

Copyright © 2015 by the American Society of Mechanical Engineers.
No reproduction may be made of this material without written consent of ASME.

is 400 psi and the design temperature is 450°F. The corrosion allowance is 0.10 in. Is additional reinforcement required?

Solution

No. According to para. 304.3.2(b), the design is adequate to sustain the internal pressure and no calculations are necessary. It is presumed, of course, that calculations have shown the run pipe to be satisfactory for the service conditions according to eqs. (2) and (3).

Copyright © 2015 by the American Society of Mechanical Engineers.
No reproduction may be made of this material without written consent of ASME.

(14)

APPENDIX J
NOMENCLATURE

Symbol	Definition	Units [Note (1)] SI	Units [Note (1)] U.S.	Reference Paragraph	Reference Table/Fig./App.	Reference Equation
A	Factor for determining minimum value of R_1	. . .	. . .	304.2.3	. . .	(5)
A_f	Conveyed fluid cross-sectional area considering nominal pipe thickness less allowances	mm^2	$in.^2$	320.2 S300.1	. . .	(23d)
A_p	Pipe cross-sectional area considering nominal pipe thickness less allowances	mm^2	$in.^2$	320.2 S300.1	. . .	(23d)
A_p	Cross-sectional area of pipe	mm^2	$in.^2$	319.4.4	. . .	(17)
A_1	Area required for branch reinforcement	mm^2	$in.^2$	304.3.3 304.3.4	304.3.3 304.3.4 H300	(6) (6a) (9) (9a)
A_2	Area available for branch reinforcement in run pipe	mm^2	$in.^2$	304.3.3 304.3.4	304.3.3 304.3.4 H300	(6a) (7) (9a) (10)
A_3	Area available for branch reinforcement in branch pipe	mm^2	$in.^2$	304.3.3 304.3.4	304.3.3 304.3.4 H300	(6a) (8) (9a) (11)
A_4	Area available for branch reinforcement in pad or connection	mm^2	$in.^2$	304.3.3 304.3.4	304.3.3 304.3.4 H300	(6a) (9a) (12)
C	Cold spring factor	. . .	. . .	319.5.1	. . .	(21) (22)
C	Material constant used in computing Larson-Miller parameter	. . .	. . .	V303.1.3 V303.1.4	. . .	(V2) (V3)
C_x	Size of fillet weld, socket welds other than flanges	mm	in.	. . .	328.5.2C D300	. . .
C_1	Estimated self-spring or relaxation factor	. . .	. . .	319.5.1	. . .	(22)

Copyright © 2015 by the American Society of Mechanical Engineers.
No reproduction may be made of this material without written consent of ASME.

Symbol	Definition	Units [Note (1)] SI	Units [Note (1)] U.S.	Reference Paragraph	Reference Table/Fig./App.	Reference Equation
c	Sum of mechanical allowances (thread or groove depth) plus corrosion and erosion allowances	mm	in.	302.3.5 302.4 304.1.1 304.1.2 304.2.3 304.3.3 304.3.4 304.4.1 304.5.2 304.5.3 A304.1.1 H300 K302.3.5 K304.1.1 K304.1.2 K304.5.2 K304.5.3 K304.8.3 S300 S301.2	304.3.3 304.3.4 328.5.5 H301	(2) (3b) (4a) (4b) (4c) (5) (7) (8) (10) (11) (12) (13) (14) (15) (25) (33) (36) (37)
c_i	Sum of internal allowances	mm	in.	K304.1.1 K304.1.2	. . .	(34b) (34d) (35a) (35b) (35c) (35d)
c_o	Sum of external allowances	mm	in.	K304.1.1 K304.1.2	. . .	(34a) (34c) (35a) (35b) (35c) (35d)
c_1	Correction factor	. . .	. . .	. . .	D300	. . .
D	Outside diameter of pipe as listed in tables of standards and specifications or as measured	mm	in.	304.1.1 304.1.2 304.1.3 304.2.3 319.4.1 A304.1.1 A304.1.2 A328.2.5 K304.1.1 K304.1.2 K304.1.3 K304.8.3 S301.2	304.1.1 304.2.3 D300 K305.1.2	(3a) (3b) (3c) (3d) (3e) (5) (16) (26a) (26b) (26c) (27) (34a) (34c) (35a) (35c) (37)
D_b	Outside diameter of branch pipe	mm	in.	304.3.1 304.3.3 304.3.4	304.3.3 304.3.4 D300	. . .
D_h	Outside diameter of header pipe	mm	in.	304.3.1 304.3.3 304.3.4	304.3.3 304.3.4	. . .
d	Inside diameter of pipe (note differences in definition between paras. 304.1.1 and K304.1.1)	mm	in.	304.1.1 304.1.2 K304.1.1 K304.1.2 S302.6.1	D300 K305.1.2	(3b) (34b) (34d) (35b) (35d)
d	Pipe inside diameter considering nominal pipe thickness less allowances	mm	in.	320.2	. . .	(23d)

Copyright © 2015 by the American Society of Mechanical Engineers.
No reproduction may be made of this material without written consent of ASME.

Symbol	Definition	Units [Note (1)] SI	Units [Note (1)] U.S.	Reference Paragraph	Reference Table/Fig./App.	Reference Equation
d_b	Inside diameter of branch pipe	mm	in.	. . .	304.3.4	. . .
d_g	Inside or pitch diameter of gasket	mm	in.	304.5.3	304.5.3	(15)
d_h	Inside diameter of header pipe	mm	in.	. . .	304.3.4	. . .
d_x	Design inside diameter of extruded outlet	mm	in.	304.3.4	304.3.4	(9) (10)
d_1	Effective length removed from pipe at branch	mm	in.	304.3.3 H300	304.3.3	(6) (7)
d_2	Half-width of reinforcement zone	mm	in.	304.3.3 304.3.4 H300	304.3.3 304.3.4	(7) (10)
E	Quality factor	. . .	. . .	302.3.1 304.1.1 304.1.2 304.2.3 304.3.3 304.4.1 304.5.1 304.5.2 304.5.3 305.2.3 K304.5.3 S301.1 S301.2 S303.1	H300	(3a) (3b) (3c) (4a) (4b) (4c) (15)
E	Modulus of elasticity (at specified condition)	MPa	ksi	A319.3.2 X302.2.3	App. C D300	(X3)
E_a	Reference modulus of elasticity at 21°C (70°F)	MPa	ksi	319.3.2 319.4.1 319.4.4 319.5 319.5.1	. . .	(21) (22)
E_c	Casting quality factor	. . .	. . .	302.3.1 302.3.3 302.3.6 305.2.3 306.1.4 K302.3.3 K306.1.1	302.3.3C Table A-1A	. . .
E_j	Joint quality factor	. . .	. . .	302.3.1 302.3.4 305.2.3 306.1.4 321.1.3 341.4.1 341.5.1 K302.3.4 K305.1.1 K306.1.1 X302.2.2	302.3.4 Table A-1B	. . .

Copyright © 2015 by the American Society of Mechanical Engineers.
No reproduction may be made of this material without written consent of ASME.

Symbol	Definition	Units [Note (1)] SI	Units [Note (1)] U.S.	Reference Paragraph	Reference Table/Fig./App.	Reference Equation
E_j	Modulus of elasticity for the condition being considered; the as-installed and operating conditions are subscripted as $j = 1, 2, 3, \ldots$	MPa	ksi	. . .	D300	. . .
E_m	Modulus of elasticity at maximum or minimum temperature	MPa	ksi	319.3.2 319.5.1	. . .	(21) (22)
E_t	Modulus of elasticity at test temperature	MPa	ksi	X302.2.3	. . .	(X3)
F	Service (design) factor	. . .	. . .	A302.3.2 A304.1.1 A304.1.2	. . .	(26c)
F_a	Axial force range between any two conditions being evaluated	N	lbf	319.4.4	. . .	(17)
F_a	Sustained longitudinal force	N	lb	320.2	. . .	(23d)
f	Stress range factor	. . .	. . .	302.3.5 S301.1	. . .	(1a) (1b) (1c)
f_m	Maximum value of stress range factor	. . .	. . .	302.3.5	. . .	(1c)
g	Root gap for welding	mm	in.	K328.4.3	328.4.4 K328.5.4	. . .
h	Flexibility characteristic	. . .	. . .	. . .	D300	. . .
h_x	Height of extruded outlet	mm	in.	304.3.4	304.3.4	. . .
I_a	Sustained longitudinal index	. . .	. . .	320.2	. . .	(23d)
I_i	Sustained in-plane index	. . .	. . .	320.2	. . .	(23b)
I_o	Sustained out-plane index	. . .	. . .	320.2	. . .	(23b)
I_t	Sustained torsional index	. . .	. . .	320.2	. . .	(23c)
i	Stress intensification factor	. . .	. . .	319.3.6	D300	. . .
i_a	Axial force stress intensification factor	. . .	. . .	319.4.4	. . .	(17)
i_i	In-plane stress intensification factor	. . .	. . .	319.4.4 320.2 S301.3 S301.6 S301.7	D300	(18) (19) (20) (23b)
i_o	Out-plane stress intensification factor	. . .	. . .	319.4.4 320.2	D300	(18) (19) (20) (23b)
i_t	Torsional stress intensification factor	. . .	. . .	319.4.4	. . .	(17)
K	Factor determined by ratio of branch diameter to run diameter	. . .	. . .	304.3.4	304.3.4	(9)
K_s	Factor for statistical variation in test results (see para. X3.1.3)	. . .	. . .	X302.1.3	. . .	(X2)
K_1	Constant in empirical flexibility equation	. . .	. . .	319.4.1	. . .	(16)

Copyright © 2015 by the American Society of Mechanical Engineers.
No reproduction may be made of this material without written consent of ASME.

Symbol	Definition	Units [Note (1)] SI	Units [Note (1)] U.S.	Reference Paragraph	Reference Table/Fig./App.	Reference Equation
k	Flexibility factor	. . .	. . .	319.3.6	D300	. . .
L	Developed length of piping between anchors	m	ft	304.1.3 319.4.1 K304.2.4	. . .	(16)
L_4	Height of reinforcement zone outside run pipe	mm	in.	304.3.3 H300	304.3.3 H301	(8)
L_5	Height of reinforcement zone for extruded outlet	mm	in.	304.3.4	304.3.4	(11)
LMP	Larson-Miller parameter, used to estimate design life	. . .	. . .	V303.1.3 V303.1.4	. . .	(V2) (V3)
M	Length of full thickness pipe adjacent to miter bend	mm	in.	304.2.3	304.2.3	. . .
M_i	In-plane moment range between any two conditions being evaluated	N-mm	in.-lbf	319.4.4	319.4.4A 319.4.4B	(18) (19) (20)
M_i	In-plane bending moment for the sustained condition being evaluated	N-mm	in.-lbf	320.2	. . .	(23b)
M_o	Out-plane moment range between any two conditions being evaluated	N-mm	in.-lbf	319.4.4	319.4.4A 319.4.4B	(18) (19) (20)
M_o	Out-plane bending moment for the sustained condition being evaluated	N-mm	in.-lbf	320.2	. . .	(23b)
M_t	Sustained torsional moment	N-mm	in.-lbf	320.2	. . .	(23c)
M_t	Torsional moment range between any two conditions being evaluated	N-mm	in.-lbf	319.4.4	319.4.4A 319.4.4B	. . .
m	Misfit of branch pipe	mm	in.	328.4.3 K328.4.3	328.4.4 K328.5.4	. . .
N	Equivalent number of full displacement cycles	. . .	. . .	300.2 302.3.5 319.4.5	302.3.5	(1c) (1d)
N_c	Number of design cycles	. . .	. . .	. . .	X302.1.3	. . .
N_{ct}	Number of cycles to failure in bellows fatigue test	. . .	. . .	X302.1.3	. . .	. . .
N_E	Number of cycles of maximum computed displacement stress range	. . .	. . .	302.3.5	. . .	(1d)
N_i	Number of cycles associated with displacement stress range, S_i ($i = 1, 2, . . .$)	. . .	. . .	302.3.5	. . .	(1d)
N_t	Number of fatigue tests performed to develop the material factor, X_m	. . .	. . .	X302.1.3	. . .	(X2)

Copyright © 2015 by the American Society of Mechanical Engineers.
No reproduction may be made of this material without written consent of ASME.

Symbol	Definition	Units [Note (1)] SI	Units [Note (1)] U.S.	Reference Paragraph	Reference Table/Fig./App.	Reference Equation
P	Design gage pressure	kPa	psi	304.1.1 304.1.2 304.2.1 304.4.1 304.5.1 304.5.2 304.5.3 345.4.2 A304.1.1 A304.1.2 A304.5.1 H300 K304.1.2 K304.7.2 K304.8.3 K345.4.2 S301.2	D300	(3a) (3b) (3c) (15) (24) (26a) (26b) (26c) (34a) (34b) (34c) (34d) (35a) (35b) (35c) (35d) (37) (38)
P_{a2}	See BPV Code, Section VIII, Division 1, UG-28	. . .	. . .	304.1.3	. . .	. . .
P_i	Gage pressure during service condition i	kPa	psi	V303.1.1	. . .	(V1)
P_j	Piping internal gage pressure for the condition being considered; the as-installed and operating conditions are subscripted as $j=$ 1, 2, 3, . . .	kPa	psi	320.2 S300.1 S301 S302 S303	D300 S301.1 S301.3.1 S302.1 S302.6.2.1	(23d) D300, Note (7)
P_m	Maximum allowable internal pressure for miter bends	kPa	psi	304.2.3	. . .	(4a) (4b) (4c)
P_{max}	Maximum allowable gage pressure for continuous operation of component at maximum design temperature	kPa	psi	V303.1.1	. . .	(V1)
P_S	Limiting design pressure based on column instability, for convoluted U-shaped bellows	kPa	psi	X302.2.3	. . .	(X3)
P_T	Minimum test gage pressure	kPa	psi	345.4.2 A382.2.5 K345.4.2 X302.2.3	. . .	(24) (27) (38) (X3)
R	Range of reaction forces or moments in flexibility analysis	N or N-mm	lbf or in.-lbf	319.5 319.5.1	. . .	(21)
R_a	Estimated instantaneous reaction force or moment at installation temperature	N or N-mm	lbf or in.-lbf	319.5.1	. . .	. . .
R_a	Roughness average	μm	μin.	K302.3.3	302.3.3C 341.3.2 K341.3.2	. . .
R_m	Estimated instantaneous maximum reaction force or moment at maximum or minimum metal temperature	N or N-mm	lbf or in.-lbf	319.5.1	. . .	(21)
R_{min}	Minimum ratio of stress ranges (see para. X3.1.3 for further details)	. . .	. . .	X302.1.3	. . .	(X1) (X2)

Copyright © 2015 by the American Society of Mechanical Engineers.
No reproduction may be made of this material without written consent of ASME.

Symbol	Definition	Units [Note (1)] SI	Units [Note (1)] U.S.	Reference Paragraph	Reference Table/Fig./App.	Reference Equation
R_T	Ratio of the average temperature dependent trend curve value of tensile strength to the room temperature tensile strength	. . .	. . .	302.3.2(d)(7)	. . .	. . .
R_Y	Ratio of the average temperature dependent trend curve value of yield strength to the room temperature yield strength	. . .	. . .	302.3.2(d)(7) K302.3.2	. . .	(31)
R_1	Effective radius of miter bend	mm	in.	304.2.3	304.2.3	(4b) (5)
R_1	Bend radius of welding elbow or pipe bend	mm	in.	304.2.1	304.2.1 D300	(3d) (3e)
r_i	Ratio of lesser computed displacement stress range, S_i, to maximum computed stress range, S_E ($i = 1, 2, . . .$)	. . .	. . .	302.3.5	. . .	(1d)
r_x	External contour radius of extruded outlet	mm	in.	304.3.4	304.3.4 D300	(12)
r_2	Mean radius of pipe using nominal wall thickness, $\overline{T}$	mm	in.	304.2.3 319.4.4	304.2.3 D300	(4a) (4b) (4c)
S	Basic allowable stress for metals	MPa	ksi	300.2 302.3.1 302.3.5 304.1.1 304.1.2 304.1.3 304.2.1 304.2.3 304.3.3 304.4.1 304.5.1 304.5.2 304.5.3 304.7.2 319.3.4 345.4.2 H300 S301.2	323.2.2B A-1	(3a) (3b) (3c) (4a) (4b) (4c) (15) (24)
S	Bolt design stress	MPa	ksi	300.2 302.3.1	A-2	. . .
S	Design stress for nonmetals	. . .	. . .	A302.3.1 A304.1.1 A304.1.2 A304.5.1 A304.5.2	B-1	(26a) (26b) (26c)
S	Allowable stress for metals	MPa	ksi	K304.1.2 K304.5.3 K345.4.2	K-1	(34a) (34b) (34c) (34d) (35a) (35b) (35c) (35d) (38)
S	Stress intensity	MPa	ksi	K304.8.3	. . .	(37)

Copyright © 2015 by the American Society of Mechanical Engineers.
No reproduction may be made of this material without written consent of ASME.

Symbol	Definition	Units [Note (1)] SI	Units [Note (1)] U.S.	Reference Paragraph	Reference Table/Fig./App.	Reference Equation
S_A	Allowable displacement stress range	MPa	ksi	300.2 302.3.5 319.2.3 319.3.4 319.4.1 319.4.4 319.4.5 K302.3.5 P319.4.5 S301.7 S303.8	S301.7 S303.7.1 S303.7.2 S303.7.3	(1a) (1b) (32)
S_a	Bolt design stress at atmospheric temperature	MPa	ksi	304.5.1 A304.5.1	. . .	. . .
S_a	Axial stress range due to displacement strains	MPa	ksi	319.4.4	. . .	(17)
S_a	Stress due to sustained longitudinal force	MPa	ksi	320.2	. . .	(23a) (23d)
S_b	Bolt design stress at design temperature	MPa	ksi	304.5.1 A304.5.1	. . .	. . .
S_b	Bending stress range due to displacement strains	MPa	ksi	319.4.4	. . .	(17) (18) (19) (20)
S_b	Stress due to sustained bending moments	MPa	ksi	320.2	. . .	(23a) (23b)
S_c	Basic allowable stress at minimum metal temperature expected during the displacement cycle under analysis	MPa	ksi	302.3.5 K302.3.5 P302.3.5 S301.7	. . .	(1a) (1b) (32) (P1a)
S_d	Allowable stress from Table A-1 for the material at design temperature	MPa	ksi	V303.1.1 V304	. . .	(V1)
S_E	Computed displacement stress range	MPa	ksi	300.2 302.3.5 319.2.3 319.4.4 319.4.5 319.5.1 K302.3.5 S301.7 S303.7	S301.7 S303.7.1 S303.7.2 S303.7.3	(17) (22)
S_f	Allowable stress for flange material or pipe	MPa	ksi	304.5.1 304.5.2 A304.5.1	. . .	. . .
S_H	Mean long-term hydrostatic strength (LTHS)	kPa	psi	A328.2.5	. . .	(27)
S_h	Basic allowable stress at maximum metal temperature expected during the displacement cycle under analysis	MPa	ksi	302.3.5 319.5.1 K302.3.5 S301.6 S301.7	S301.6	(1a) (1b) (23) (32)
S_i	A computed displacement stress range smaller than S_E ($i = 1, 2, \ldots$)	MPa	ksi	302.3.5	. . .	(1d)

Copyright © 2015 by the American Society of Mechanical Engineers.
No reproduction may be made of this material without written consent of ASME.

Symbol	Definition	Units [Note (1)] SI	Units [Note (1)] U.S.	Reference Paragraph	Reference Table/Fig./App.	Reference Equation
S_i	Equivalent stress during service condition, *i* (the higher of S_{pi} and S_L)	MPa	ksi	V303.1.1 V303.1.2 V304	. . .	. . .
S_L	Stress due to sustained loads	MPa	ksi	302.3.5 302.3.6 320 K302.3.5 K302.3.6 S301.3 S301.6 S302.6.1 S302.6.3 S303.6 V303.1.1 V304	S301.6 S302.6.3.1	(1b) (23a)
S_{pi}	Equivalent stress for pressure during service condition, *i*	MPa	ksi	V303.1.1 V304	. . .	(V1)
S_S	Mean short-term burst stress	kPa	psi	A328.2.5	. . .	(27)
S_T	Specified minimum tensile strength at room temperature	MPa	ksi	302.3.2	. . .	. . .
S_T	Allowable stress at test temperature	MPa	ksi	345.4.2 K345.4.2	. . .	(24) (38)
S_t	Torsional stress range due to displacement strains	MPa	ksi	319.4.4	. . .	(17)
S_t	Stress due to sustained torsional moment	MPa	ksi	320.2	. . .	(23a) (23c)
S_t	Total stress range for design fatigue curves applying to austenitic stainless steel expansion joints	. . .	psi	X302.1.3	X302.1.3	. . .
S_Y	Specified minimum yield strength at room temperature	MPa	ksi	302.3.2 K302.3.2 K328.2.1	. . .	(31)
S_y	Yield strength (BPV Code)	MPa	ksi	302.2.4 K304.7.2	. . .	. . .
S_{yT}	Yield strength at test temperature	MPa	ksi	X302.2.3	. . .	. . .
S_{yt}	Yield strength at temperature	MPa	ksi	K302.3.2 K302.3.6 K304.7.2 K345.2.1	. . .	(31)
S_{yt}	Yield strength at bellows design temperature	MPa	ksi	X302.2.3	. . .	. . .
s	Miter spacing at pipe centerline	mm	in.	. . .	D300	. . .

Copyright © 2015 by the American Society of Mechanical Engineers.
No reproduction may be made of this material without written consent of ASME.

Symbol	Definition	Units [Note (1)] SI	Units [Note (1)] U.S.	Reference Paragraph	Reference Table/Fig./App.	Reference Equation
T	Pipe wall thickness (measured or minimum in accordance with purchase specification)	mm	in.	304.1.1 304.2.3 306.4.2 A304.1.1 K304.1.1 K304.1.2 K304.8.3 S301.2	302.3.3D 304.2.3 323.3.1 K323.3.1	(4a) (4b) (4c) (35a) (35b) (35c) (35d) (37)
T_b	Branch pipe wall thickness (measured or minimum in accordance with purchase specification)	mm	in.	304.3.3 304.3.4 H300	304.3.3 304.3.4	(8) (11) (12)
T_c	Crotch thickness of branch connections	mm	in.	. . .	D300	. . .
T_{cr}	Critical temperature	°C	°F	300.2	302.3.5	. . .
T_E	Effective temperature for service condition, i (temperature corresponding to S_i, Table A-1)	°C	°F	V303.1.2 V303.1.3	. . .	(V2)
T_h	Header pipe wall thickness (measured or minimum in accordance with purchase specification)	mm	in.	304.3.1 304.3.3 304.3.4 H300	304.3.3 304.3.4	(7) (10)
T_i	Temperature of the component for the coincident operating pressure–temperature condition, i, under consideration	°C	°F	V303.1.4	. . .	(V3)
T_j	Pipe metal temperature for the condition being considered; the as-installed and operating conditions are subscripted as $j = 1, 2, 3, \ldots$	°C	°F	S300.1 S301 S302 S303	D300 S301.1 S301.3.1 S302.1	D300, Note (7)
T_r	Minimum thickness of reinforcing ring or saddle made from pipe (nominal thickness if made from plate)	mm	in.	304.3.3 H300	304.3.3	. . .
T_s	Effective branch wall thickness	mm	in.	319.4.4	. . .	. . .
T_x	Corroded finished thickness of extruded outlet	mm	in.	304.3.4	304.3.4	(12)
T_2	Minimum thickness of fabricated lap	mm	in.	. . .	328.5.5	. . .
$\overline{T}$	Nominal wall thickness of pipe	mm	in.	302.3.5 304.2.3 A328.2.5 S301.2	323.2.2A 328.5.2B 328.5.5 K302.3.3D D300	(27)
$\overline{T}_b$	Nominal branch pipe wall thickness	mm	in.	319.4.4 328.5.4 331.1.3	304.3.3 328.5.4D	. . .
$\overline{T}_h$	Nominal header pipe wall thickness	mm	in.	319.4.4 328.5.4 331.1.3	304.3.3 328.5.4D	. . .

Copyright © 2015 by the American Society of Mechanical Engineers.
No reproduction may be made of this material without written consent of ASME.

Symbol	Definition	Units [Note (1)] SI	Units [Note (1)] U.S.	Reference Paragraph	Reference Table/Fig./App.	Reference Equation
$\overline{T}_m$	Nominal thickness of branch weld for integrally reinforced branch connection fittings [see para. 328.5.4(c) for further details]	mm	in.	328.5.4(c) 331.1.3(a)	328.5.4F	. . .
$\overline{T}_r$	Nominal thickness of reinforcing ring or saddle	mm	in.	328.5.4 331.1.3	328.5.4D D300	. . .
$\overline{T}_w$	Nominal wall thickness, thinner of components joined by butt weld	mm	in.	344.6.2	341.3.2 K341.3.2	. . .
t	Pressure design thickness	mm	in.	304.1.1 304.1.2 304.1.3 304.2.1 304.3.3 304.4.1 304.5.2 A304.1.1 A304.1.2 A304.1.3 K304.1.1 K304.1.2 K304.1.3 K304.5.2 S301.2	304.1.1 304.5.3 328.5.2C	(2) (3a) (3b) (3c) (13) (14) (25) (26a) (26b) (26c) (33) (34a) (34b) (34c) (34d) (36)
t_b	Pressure design thickness of branch	mm	in.	304.3.3 304.3.4 H300	304.3.3 304.3.4	(8) (11)
t_c	Throat thickness of cover fillet weld	mm	in.	328.5.4 331.1.3 H300	328.5.4D	. . .
t_h	Pressure design thickness of header	mm	in.	304.3.3 304.3.4 H300	304.3.3 304.3.4	(6) (7) (9) (10)
t_i	Total duration of service condition, i, at pressure, P_i, and temperature, T_i	h	hr	V303.2 V304	. . .	(V4)
t_m	Minimum required thickness, including mechanical, corrosion, and erosion allowances	mm	in.	304.1.1 304.2.1 304.4.1 304.5.2 304.5.3 328.4.2 A304.1.1 A304.2.1 K304.1.1 K304.2.1 K304.5.2 K328.4.2 S301.2	328.3.2 328.4.3 K328.4.2 K341.3.2	(2) (13) (14) (15) (25) (33) (36)
t_{min}	For branch, the smaller of $\overline{T}_b$ or $\overline{T}_r$	mm	in.	328.5.4	328.5.4D	. . .
t_{ri}	Rupture life of a component subjected to repeated service conditions, i, and stress, S_i	h	hr	V303.1.4 V303.2 V304	. . .	(V3) (V4)
U	Straight line distance between anchors	m	ft	319.4.1	. . .	(16)

Copyright © 2015 by the American Society of Mechanical Engineers.
No reproduction may be made of this material without written consent of ASME.

Symbol	Definition	Units [Note (1)] SI	Units [Note (1)] U.S.	Reference Paragraph	Reference Table/Fig./App.	Reference Equation
u	Creep-rupture usage factor, summed up from individual usage factors, t_i/t_{ri}	. . .	. . .	V303.2 V303.3 V304	. . .	(V4)
W	Weld joint strength reduction factor	. . .	. .	302.2.2 302.3.5 304.1.1 304.1.2 304.2.1 304.2.3 304.3.3 304.4.1 304.5.1 304.5.2 304.5.3	302.3.5	(3a) (3b) (3c) (4a) (4b) (4c) (15)
X	Factor for modifying the allowable stress range, S_t, for bellows expansion joint (see para. X302.1.3 for further details)	. . .	. . .	X302.1.3	. . .	(X1) (X2)
X_1	Ring reinforcement area	mm^2	in.^{2}	H304	. . .	. . .
X_2	Fillet weld reinforcement area	mm^2	in.^{2}	H304	. . .	. . .
x_{min}	Size of fillet weld to slip-on or socket welding flange	mm	in.	. . .	328.5.2B	. . .
Y	Coefficient for effective stressed diameter	. . .	. . .	304.1.1 304.1.2 S300 S301.2	304.1.1	(3a) (3b) (3c)
$Y+$	Single acting support — a pipe support that provides support to the piping system in only the vertically upward direction	. . .	. . .	S300.1 S302 S302.1 S302.6.2	S302.5.1 S302.6.3.1	. . .
y	Resultant of total displacement	mm	in.	319.4.1	. . .	(16)
Z	Section modulus of pipe	mm^3	in.^{3}	319.4.4	. . .	(18) (19)
Z	Sustained section modulus of pipe	mm^3	in.^{3}	320.2	. . .	(23b) (23c)
Z_e	Effective section modulus for branch	mm^3	in.^{3}	319.4.4	. . .	(20)
α	Angle of change in direction at miter joint	deg	deg	304.2.3 306.3.2 306.3.3 M306.3	304.2.3	. . .
β	Smaller angle between axes of branch and run	deg	deg	304.3.1 304.3.3	304.3.3	(6) (8)

Copyright © 2015 by the American Society of Mechanical Engineers.
No reproduction may be made of this material without written consent of ASME.

Symbol	Definition	Units [Note (1)] SI	Units [Note (1)] U.S.	Reference Paragraph	Reference Table/Fig./App.	Reference Equation
γ	Span of the pipe bend	deg	deg	304.2.1	304.2.1	. . .
θ	Angle of miter cut	deg	deg	304.2.3	304.2.3 D300	(4a) (4c) (5)

GENERAL NOTE: For Code reference to this Appendix, see para. 300.3.

NOTE:

(1) Note that the use of these units is not required by the Code. They represent sets of consistent units (except where otherwise stated) that may be used in computations, if stress values in ksi and MPa are multiplied by 1,000 for use in equations that also involve pressure in psi and kPa values.

Copyright © 2015 by the American Society of Mechanical Engineers.
No reproduction may be made of this material without written consent of ASME.

INTENTIONALLY LEFT BLANK

Copyright © 2015 by the American Society of Mechanical Engineers.
No reproduction may be made of this material without written consent of ASME.

(14)

APPENDIX K
ALLOWABLE STRESSES FOR HIGH PRESSURE PIPING

Specification Index for Appendix K

Spec. No.	Title	Page
ASTM		
A53	Pipe, Steel, Black and Hot-Dipped, Zinc Coated, Welded and Seamless	414
A105	Forgings, Carbon Steel, for Piping Components	414
A106	Seamless Carbon Steel Pipe for High-Temperature Service	414
A182	Forged or Rolled Alloy-Steel Pipe Flanges, Forged Fittings, and Valves and Parts for High-Temperature Service	416, 418, 420
A210	Seamless Medium-Carbon Steel Boiler and Superheater Tubes	414
A234	Piping Fittings of Wrought Carbon Steel and Alloy Steel for Moderate and Elevated Temperatures	414
A312	Seamless and Welded Austenitic Stainless Steel Pipe	416, 418
A333	Seamless and Welded Steel Pipe for Low-Temperature Service	414, 416
A334	Seamless and Welded Carbon and Alloy-Steel Tubes for Low-Temperature Service	414, 416
A335	Seamless Ferritic Alloy Steel Pipe for High-Temperature Service	414
A350	Forgings, Carbon and Low-Alloy Steel Requiring Notch Toughness Testing for Piping Components	414, 416
A358	Electric-Fusion-Welded Austenitic Chromium-Nickel Alloy Steel Pipe for High-Temperature Service	416, 418
A403	Wrought Austenitic Stainless Steel Piping Fittings	418, 420
A420	Piping Fittings of Wrought Carbon Steel and Alloy Steel for Low-Temperature Service	414, 416
A508	Quenched and Tempered Vacuum-Treated Carbon and Alloy Steel Forgings for Pressure Vessels	416
A694	Carbon and Alloy Steel Forgings for Pipe Flanges, Fittings, Valves, and Parts for High-Pressure Transmission Service	414
A723	Alloy Steel Forgings for High-Strength Pressure Component Application	416
B164	Nickel-Copper Alloy Rod, Bar and Wire	422
B165	Nickel-Copper Alloy (UNS N04400) Seamless Pipe and Tube	422
B166	Nickel-Chromium-Iron Alloy (UNS N06600) Rod, Bar and Wire	422
B167	Nickel-Chromium-Iron Alloy (UNS N06600-N06690) Seamless Pipe and Tube	422
B338	Seamless and Welded Titanium and Titanium Alloy Tubes for Condensers and Heat Exchangers	424
B363	Seamless and Welded Unalloyed Titanium and Titanium Alloy Welding Fittings	424
B366	Factory-Made Wrought Nickel and Nickel-Alloy Welding Fittings	422
B381	Titanium and Titanium Alloy Forgings	424
B564	Nickel Alloy Forgings	422
B574	Low-Carbon Nickel-Molybdenum-Chromium Alloy Rod	422
B622	Seamless Nickel and Nickel-Cobalt Alloy Pipe and Tube	422
B861	Titanium and Titanium Alloy Seamless Pipe	424
API		
5L	Line Pipe	414

GENERAL NOTE: It is not practical to refer to a specific edition of each standard throughout the Code text. Instead, the approved edition references, along with the names and addresses of the sponsoring organizations, are shown in Appendix E.

Copyright © 2015 by the American Society of Mechanical Engineers.
No reproduction may be made of this material without written consent of ASME.

NOTES FOR APPENDIX K TABLE (14)

GENERAL NOTES:

(a) The allowable stress values and P-Number assignments in Table K-1, together with the referenced Notes, are requirements of Chapter IX.

(b) Notes (1) through (5) and (12) are referenced in column headings or in body headings for material type and product form; Notes (6) through (11) and (13) through (18) are referenced in the Notes column for specific materials.

(c) At this time, metric equivalents have not been provided in Table K-1. To convert stress values in Table K-1 to MPa at a given temperature in °C, determine the equivalent temperature in °F and interpolate to calculate the stress value in ksi at the given temperature. Multiply by 6.895 to determine allowable stress in MPa at the given temperature.

(d) The following abbreviations are used in the Condition and Size Range columns: ann., annealed; A.W., as worked; C.W., cold worked; H.W., hot worked; hex., hexagons; O.D., outside diameter; rd., rounds; rec., rectangles; rel., relieved; sq., squares; and str., stress.

(e) Samples representative of all piping components, as well as their fabrication welds, shall be impact tested in accordance with para. K323.3.

(f) A product analysis of the material shall be performed. See para. K323.1.5.

(g) Material defects may be repaired by welding only in accordance with para. K323.1.6.

NOTES:

(1) See the BPV Code, Section IX, QW-200.3 for a description of P-Number groupings. P-Numbers are indicated by number or by a number followed by a letter (e.g., 8, 5B, and 11A).

(2) The stress values in Table K-1 are allowable stresses in tension in accordance with para. K302.3.1(a). Stress values in shear and bearing are stated in para. K302.3.1(b), those in compression in para. K302.3.1(c).

(3) Material minimum service temperature shall be in accordance with para. K323.2.2.

(4) The temperature limit for materials shall be in accordance with para. K323.2.1.

(5) Pipe and tubing shall be examined for longitudinal defects in accordance with Table K305.1.2.

(6) This type or grade is permitted only in the seamless condition.

(7) Galvanized pipe furnished to this specification is not permitted for pressure containing service. See para. K323.4.2(b).

(8) If this grade is cold expanded, the most severely deformed portion of a representative sample shall be impact tested in accordance with para. K323.3.

(9) For High Pressure Fluid Service at temperatures above 100°F but not exceeding 400°F, either the allowable stresses listed in Table A-1 for this material or allowable stresses derived in accordance with the requirements of para. K323.2.4 may be used. This material shall not be used for Chapter IX service above 400°F.

(10) This material may require special consideration for welding qualification. See the BPV Code, Section IX, QW/QB-422. For use in this Code, a qualified WPS is required for each strength level of material.

(11) No welding is permitted on this material.

(12) Stress values printed in *italics* exceed two-thirds of the expected yield strength at temperature. Stress values in **boldface** are equal to 90% of yield strength at temperature. See para. K302.3.2.

(13) Welds shall be of a design that permits fully interpretable radiographic examination; joint quality factor, E_j, shall be 1.00 in accordance with para. K302.3.4.

(14) Pipe furnished to this specification shall be supplied in the solution heat treated condition.

(15) This unstabilized grade of stainless steel increasingly tends to precipitate intergranular carbides as the carbon content increases above 0.03%. See also para. F323.4(c)(2).

(16) For material thickness > 127 mm (5 in.), the specified minimum tensile strength is 448 MPa (65 ksi).

(17) For material thickness > 127 mm (5 in.), the specified minimum tensile strength is 483 MPa (70 ksi).

(18) Stress values shown are for the lowest strength base material permitted by the specification to be used in the manufacture of this grade of fitting. If a higher strength base material is used, the higher stress values for that material may be used in design.

Copyright © 2015 by the American Society of Mechanical Engineers.
No reproduction may be made of this material without written consent of ASME.

(14) **Table K-1 Allowable Stresses in Tension for Metals for Chapter IX**

Numbers in Parentheses Refer to Notes for Appendix K Table; Specifications Are ASTM Unless Otherwise Indicated

Material	Spec. No.	P-No. (1)	Type or Grade	Notes	Specified Min. Strength, ksi Tensile	Specified Min. Strength, ksi Yield
Carbon Steel						
Pipes and Tubes (5)						
. . .	A53	1	B	(6)(7)	60	35
. . .	A106	1	B	. . .	60	35
. . .	A333	1	6	(6)	60	35
. . .	A334	1	6	(6)	60	35
. . .	API 5L	1	B	(6)(8)	60	35
. . .	A210	1	A-1	. . .	60	37
. . .	A106	1	C	. . .	70	40
. . .	A210	1	C	. . .	70	40
. . .	API 5L	1	X42	(6)(8)(9)	60	42
. . .	API 5L	1	X46	(6)(8)(9)	63	46
. . .	API 5L	1	X52	(6)(8)(9)	66	52
. . .	API 5L	1	X56	(6)(8)(9)(10)	71	56
. . .	API 5L	1	X60	(6)(8)(9)(10)	75	60
. . .	API 5L	1	X65	(6)(8)(9)(10)	77	65
. . .	API 5L	1	X70	(6)(8)(9)(10)	82	70
. . .	API 5L	1	X80	(6)(8)(9)(10)	90	80
Forgings and Fittings						
. . .	A234	1	WPB	(6)	60	35
. . .	A420	1	WPL6	(6)	60	35
. . .	A350	1	LF2	. . .	70	36
. . .	A105	1	. . .	. . .	70	36
. . .	A234	1	WPC	(6)	70	40
. . .	A694	1	F42	. . .	60	42
. . .	A694	1	F46	. . .	60	46
. . .	A694	1	F48	. . .	62	48
. . .	A694	1	F50	. . .	64	50
. . .	A694	1	F52	. . .	66	52
. . .	A694	1	F56	. . .	68	56
. . .	A694	1	F60	. . .	75	60
. . .	A694	1	F65	. . .	77	65
. . .	A694	1	F70	. . .	82	70
Low and Intermediate Alloy Steel						
Pipes and Tubes (5)						
C–½Mo	A335	3	P1	. . .	55	30
1Cr–½Mo	A335	4	P12	. . .	60	32
1¼Cr–½Mo	A335	4	P11	. . .	60	30
5Cr–½Mo	A335	5A	P5	. . .	60	30
2¼Cr–1Mo	A335	5A	P22	. . .	60	30

Copyright © 2015 by the American Society of Mechanical Engineers.
No reproduction may be made of this material without written consent of ASME.

Table K-1 Allowable Stresses in Tension for Metals for Chapter IX (14)

Numbers in Parentheses Refer to Notes for Appendix K Table; Specifications Are ASTM Unless Otherwise Indicated

Allowable Stress, ksi (Multiply by 1000 to Obtain psi), for Metal Temperature, °F, Not Exceeding [Notes (2)–(4)]											
Min. Temp. to 100	150	200	250	300	400	500	600	650	700	Type or Grade	Spec. No.
											Carbon Steel Pipes and Tubes (5)
23.3	. . .	21.3	. . .	20.7	20.0	18.9	17.3	16.9	16.8	B	A53
23.3	. . .	21.3	. . .	20.7	20.0	18.9	17.3	16.9	16.8	B	A106
23.3	. . .	21.3	. . .	20.7	20.0	18.9	17.3	16.9	16.8	6	A333
23.3	. . .	21.3	. . .	20.7	20.0	18.9	17.3	16.9	16.8	6	A334
23.3	. . .	21.3	. . .	20.7	20.0	18.9	17.3	16.9	16.8	B	API 5L
24.7	. . .	22.5	. . .	21.9	21.1	20.0	18.3	17.9	17.8	A-1	A210
26.7	. . .	24.3	. . .	22.9	23.7	21.6	19.7	19.4	19.2	C	A106
26.7	. . .	24.3	. . .	22.9	23.7	21.6	19.7	19.4	19.2	C	A210
28.0	. . .	. . .	. . .	. . .	. . .	. . .	. . .	. . .	. . .	X42	API 5L
30.7	. . .	. . .	. . .	. . .	. . .	. . .	. . .	. . .	. . .	X46	API 5L
34.7	. . .	. . .	. . .	. . .	. . .	. . .	. . .	. . .	. . .	X52	API 5L
37.3	. . .	. . .	. . .	. . .	. . .	. . .	. . .	. . .	. . .	X56	API 5L
40.0	. . .	. . .	. . .	. . .	. . .	. . .	. . .	. . .	. . .	X60	API 5L
43.3	. . .	. . .	. . .	. . .	. . .	. . .	. . .	. . .	. . .	X65	API 5L
46.7	. . .	. . .	. . .	. . .	. . .	. . .	. . .	. . .	. . .	X70	API 5L
53.3	. . .	. . .	. . .	. . .	. . .	. . .	. . .	. . .	. . .	X80	API 5L
											Forgings and Fittings
23.3	. . .	21.3	. . .	20.7	20.0	18.9	17.3	16.9	16.8	WPB	A234
23.3	. . .	21.3	. . .	20.7	20.0	18.9	17.3	16.9	16.8	WPL6	A420
24.0	. . .	21.9	. . .	21.3	20.6	19.5	17.7	17.5	17.3	LF2	A350
24.0	. . .	21.9	. . .	21.3	20.6	19.5	17.7	17.5	17.3	. . .	A105
26.7	. . .	24.3	. . .	23.7	22.9	21.6	19.7	19.4	19.2	WPC	A234
28.0	25.9	24.7	23.6	22.6	21.1	19.8	18.9	18.5	18.1	F42	A694
30.7	28.4	27.1	25.9	24.8	23.1	21.7	20.7	20.2	19.8	F46	A694
32.0	29.6	28.2	27.0	25.9	24.1	22.6	21.6	21.1	20.7	F48	A694
33.3	30.9	29.4	28.1	27.0	25.1	23.6	22.5	22.0	21.5	F50	A694
34.7	32.1	30.6	29.2	28.0	26.1	24.5	23.4	22.9	22.4	F52	A694
37.3	34.6	33.0	31.5	30.2	28.1	26.4	25.2	24.6	24.1	F56	A694
40.0	37.0	35.3	33.7	32.3	30.1	28.3	27.0	26.4	25.8	F60	A694
43.3	40.1	38.2	36.6	35.0	32.6	30.6	29.2	28.6	28.0	F65	A694
46.7	43.2	41.2	39.4	37.7	35.1	33.0	31.4	30.8	30.1	F70	A694
											Low and Intermediate Alloy Steel Pipes and Tubes (5)
20.0	. . .	18.5	. . .	17.5	16.9	16.3	15.7	15.4	15.1	P1	A335
21.3	. . .	19.3	. . .	18.1	17.3	16.7	16.3	16.1	15.8	P12	A335
20.0	. . .	18.7	. . .	17.9	17.5	17.2	16.7	16.2	15.7	P11	A335
20.0	. . .	18.1	. . .	17.4	17.2	17.1	16.8	16.6	16.3	P5	A335
20.0	. . .	18.5	. . .	18.1	17.9	17.9	17.9	17.9	17.9	P22	A335

Copyright © 2015 by the American Society of Mechanical Engineers.
No reproduction may be made of this material without written consent of ASME.

(14) **Table K-1 Allowable Stresses in Tension for Metals for Chapter IX (Cont'd)**

Numbers in Parentheses Refer to Notes for Appendix K Table; Specifications Are ASTM Unless Otherwise Indicated

Material	Spec. No.	P-No. (1)	Type or Grade	Notes	Specified Min. Strength, ksi Tensile	Specified Min. Strength, ksi Yield
Low and Intermediate Alloy Steel (Cont'd)						
Pipes and Tubes (5) (Cont'd)						
3½Ni	A333	9B	3	(6)	65	35
3½Ni	A334	9B	3	(6)	65	35
9Ni	A333	11A	8	(6)	100	75
9Ni	A334	11A	8	(6)	100	75
Forgings and Fittings						
3½Ni	A420	9B	WPL3	(6)	65	35
3½Ni	A350	9B	LF3	. . .	70	37.5
1Cr–½Mo	A182	4	F12, Cl. 2	. . .	70	40
1¼Cr–½Mo	A182	4	F11, Cl. 2	. . .	70	40
C–½Mo	A182	3	F1	. . .	70	40
5Cr–½Mo	A182	5B	F5	. . .	70	40
2¼Cr–1Mo	A182	5A	F22, Cl. 3	. . .	75	45
9Ni	A420	11A	WPL8	(6)	100	75
3½Ni–1¾Cr–½Mo	A508	11A	4N, Cl. 2	. . .	115	100
Ni–Cr–Mo	A723	. . .	1, 2, 3 Cl. 1	(11)	115	100
Ni–Cr–Mo	A723	. . .	1, 2, 3 Cl. 2	(11)	135	120
Ni–Cr–Mo	A723	. . .	1, 2, 3 Cl. 3	(11)	155	140
Stainless Steel (12)						
Pipes and Tubes (5)						
16Cr–12Ni–2Mo	A312	8	TP316L	(13)	70	25
316L, A240	A358	8	316L, Cl. 1 & 3	(13)(14)	70	25
16Cr–12Ni–2Mo–N	A312	8	TP316LN	(13)	75	30
316LN, A240	A358	8	316LN, Cl. 1 & 3	(13)(14)	75	30
18Cr–8Ni	A312	8	TP304L	(13)	70	25
304L, A240	A358	8	304L, Cl. 1 & 3	(13)(14)	70	25
18Cr–8Ni–N	A312	8	TP304LN	(13)	75	30
304LN, A240	A358	8	304LN, Cl. 1 & 3	(13)(14)	75	30

Copyright © 2015 by the American Society of Mechanical Engineers.
No reproduction may be made of this material without written consent of ASME.

Table K-1 Allowable Stresses in Tension for Metals for Chapter IX (Cont'd) (14)

Numbers in Parentheses Refer to Notes for Appendix K Table; Specifications Are ASTM Unless Otherwise Indicated

Allowable Stress, ksi (Multiply by 1000 to Obtain psi), for Metal Temperature, °F, Not Exceeding [Notes (2)–(4)]											
Min. Temp. to 100	150	200	250	300	400	500	600	650	700	Type or Grade	Spec. No.
										Low and Intermediate Alloy Steel (Cont'd)	
										Pipes and Tubes (5) (Cont'd)	
23.3	. . .	21.3	. . .	20.7	20.0	18.9	17.3	17.0	15.7	3	A333
23.3	. . .	21.3	. . .	20.7	20.0	18.9	17.3	17.0	15.7	3	A334
50.0	. . .	48.0	47.0	. . .	. . .	. . .	. . .	. . .	. . .	8	A333
50.0	. . .	48.0	47.0	. . .	. . .	. . .	. . .	. . .	. . .	8	A334
										Forgings and Fittings	
23.3	. . .	21.3	. . .	19.6	. . .	. . .	. . .	. . .	. . .	WPL3	A420
25.0	. . .	22.8	. . .	22.1	. . .	. . .	. . .	. . .	. . .	LF3	A350
26.7	. . .	24.1	. . .	22.7	21.7	20.9	20.3	20.1	19.7	F12, Cl. 2	A182
26.7	. . .	24.6	. . .	23.4	22.5	21.7	20.9	20.5	20.1	F11, Cl. 2	A182
26.7	. . .	24.6	. . .	23.4	22.5	21.7	20.9	20.5	20.1	F1	A182
26.7	. . .	24.1	. . .	23.2	22.9	22.7	22.4	22.1	21.7	F5	A182
30.0	. . .	27.5	. . .	26.1	25.5	24.8	24.3	24.0	23.7	F22, Cl. 3	A182
50.0	. . .	48.0	47.0	. . .	. . .	. . .	. . .	. . .	. . .	WPL8	A420
66.7	. . .	62.8	. . .	60.8	59.5	58.5	57.4	56.7	. . .	4N, Cl. 2	A508
66.7	. . .	64.0	. . .	62.3	61.3	60.3	59.3	58.5	57.3	1, 2, 3 Cl. 1	A723
80.0	. . .	76.8	. . .	74.8	73.6	72.4	71.2	70.1	68.8	1, 2, 3 Cl. 2	A723
93.3	. . .	89.6	. . .	87.3	85.9	84.5	83.1	81.9	80.3	1, 2, 3 Cl. 3	A723
										Stainless Steel (12)	
										Pipes and Tubes (5)	
16.7	. . .	*16.7*	. . .	*16.7*	**15.8**	**14.8**	**14.0**	**13.8**	**13.5**	TP316L	A312
16.7	. . .	*16.7*	. . .	*16.7*	**15.8**	**14.8**	**14.0**	**13.8**	**13.5**	316L, Cl. 1 & 3	A358
20.0	. . .	*20.0*	. . .	*20.0*	**18.9**	**17.5**	**16.5**	**16.0**	**15.6**	TP316LN	A312
20.0	. . .	*20.0*	. . .	*20.0*	**18.9**	**17.5**	**16.5**	**16.0**	**15.6**	316LN, Cl. 1 & 3	A358
16.7	. . .	*16.7*	. . .	*16.7*	**15.8**	**14.7**	**14.0**	**13.7**	**13.4**	TP304L	A312
16.7	. . .	*16.7*	. . .	*16.7*	**15.8**	**14.7**	**14.0**	**13.7**	**13.4**	304L, Cl. 1 & 3	A358
20.0	. . .	*20.0*	. . .	*20.0*	**18.6**	**17.5**	**16.4**	**16.1**	**15.9**	TP304LN	A312
20.0	. . .	*20.0*	. . .	*20.0*	**18.6**	**17.5**	**16.4**	**16.1**	**15.9**	304LN, Cl. 1 & 3	A358

Copyright © 2015 by the American Society of Mechanical Engineers.
No reproduction may be made of this material without written consent of ASME.

(14) **Table K-1 Allowable Stresses in Tension for Metals for Chapter IX (Cont'd)**

Numbers in Parentheses Refer to Notes for Appendix K Table; Specifications Are ASTM Unless Otherwise Indicated

Material	Spec. No.	P-No. (1)	Type or Grade	Notes	Specified Min. Strength, ksi Tensile	Specified Min. Strength, ksi Yield
Stainless Steel (12) (Cont'd)						
Pipes and Tubes (5) (Cont'd)						
18Cr–10Ni–Ti smls. > 3/8 in. thick	A312	8	TP321	. . .	70	25
18Cr–10Ni–Ti smls. ≤ 3/8 in. thick or wld.	A312	8	TP321	(13)	75	30
321, A240	A358	8	321, Cl. 1 & 3	(13)(14)	75	30
18Cr–8Ni	A312	8	TP304	(13)(15)	75	30
304, A240	A358	8	304, Cl. 1 & 3	(13)(14)(15)	75	30
16Cr–12Ni–2Mo	A312	8	TP316	(13)(15)	75	30
316, A240	A358	8	316, Cl. 1 & 3	(13)(14)(15)	75	30
18Cr–13Ni–3Mo	A312	8	TP317	(13)(15)	75	30
18Cr–10Ni–Cb	A312	8	TP347	(13)	75	30
347, A240	A358	8	347, Cl. 1 & 3	(13)(14)	75	30
18Cr–8Ni–N	A312	8	TP304N	(13)(15)	80	35
304N, A240	A358	8	304N, Cl. 1 & 3	(13)(14)(15)	80	35
16Cr–12Ni–2Mo–N	A312	8	TP316N	(13)(15)	80	35
316N, A240	A358	8	316N, Cl. 1 & 3	(13)(14)(15)	80	35
Forgings and Fittings						
16Cr–12Ni–2Mo	A182	8	F316L	(16)	70	25
16Cr–12Ni–2Mo	A403	8	WP316L, Cl. S & WX	(13)	70	25
16Cr–12Ni–2Mo–N	A182	8	F316LN	(17)	75	30
16Cr–12Ni–2Mo–N	A403	8	WP316LN, Cl. S & WX	(13)	75	30
18Cr–8Ni	A182	8	F304L	(16)	70	25
18Cr–8Ni	A403	8	WP304L, Cl. S & WX	(13)	70	25
18Cr–8Ni–N	A182	8	F304LN	(17)	75	30
18Cr–8Ni–N	A403	8	WP304LN, Cl. S & WX	(13)	75	30

Copyright © 2015 by the American Society of Mechanical Engineers.
No reproduction may be made of this material without written consent of ASME.

Table K-1 Allowable Stresses in Tension for Metals for Chapter IX (Cont'd) (14)

Numbers in Parentheses Refer to Notes for Appendix K Table; Specifications Are ASTM Unless Otherwise Indicated

Allowable Stress, ksi (Multiply by 1000 to Obtain psi), for Metal Temperature, °F, Not Exceeding [Notes (2)–(4)]											
Min. Temp. to 100	150	200	250	300	400	500	600	650	700	Type or Grade	Spec. No.
										Stainless Steel (12) (Cont'd)	
										Pipes and Tubes (5) (Cont'd)	
16.7	. . .	*16.7*	. . .	*16.7*	*16.7*	**16.1**	**15.2**	**14.9**	**14.6**	TP321 smls. > $^3/_8$ in. thick	A312
20.0	. . .	*20.0*	. . .	*20.0*	*20.0*	**19.4**	**18.3**	**17.9**	**17.5**	TP321 smls. ≤ $^3/_8$ in. thick & wld.	A312
20.0	. . .	*20.0*	. . .	*20.0*	*20.0*	**19.4**	**18.3**	**17.9**	**17.5**	321, Cl. 1 & 3	A358
20.0	. . .	*20.0*	. . .	*20.0*	**18.6**	**17.5**	**16.4**	**16.1**	**15.9**	TP304	A312
20.0	. . .	*20.0*	. . .	*20.0*	**18.6**	**17.5**	**16.4**	**16.1**	**15.9**	304, Cl. 1 & 3	A358
20.0	. . .	*20.0*	. . .	*20.0*	**19.3**	**18.0**	**17.0**	**16.7**	**16.3**	TP316	A312
20.0	. . .	*20.0*	. . .	*20.0*	**19.3**	**18.0**	**17.0**	**16.7**	**16.3**	316, Cl. 1 & 3	A358
20.0	. . .	*20.0*	. . .	*20.0*	**19.3**	**18.0**	**17.0**	**16.7**	**16.3**	TP317	A312
20.0	. . .	*20.0*	. . .	*20.0*	*20.0*	*20.0*	**19.4**	**19.0**	**18.6**	TP347	A312
20.0	. . .	*20.0*	. . .	*20.0*	*20.0*	*20.0*	**19.4**	**19.0**	**18.6**	347, Cl. 1 & 3	A358
23.3	. . .	*23.3*	. . .	**22.5**	**20.3**	**18.8**	**17.8**	**17.6**	**17.2**	TP304N	A312
23.3	. . .	*23.3*	. . .	**22.5**	**20.3**	**18.8**	**17.8**	**17.6**	**17.2**	304N, Cl. 1 & 3	A358
23.3	. . .	*23.3*	. . .	*23.3*	*23.3*	**22.2**	**21.1**	**20.5**	**20.1**	TP316N	A312
23.3	. . .	*23.3*	. . .	*23.3*	*23.3*	**22.2**	**21.1**	**20.5**	**20.1**	316N, Cl. 1 & 3	A358
										Forgings and Fittings	
16.7	. . .	*16.7*	. . .	*16.7*	**15.8**	**14.8**	**14.0**	**13.8**	**13.5**	F316L	A182
16.7	. . .	*16.7*	. . .	*16.7*	**15.8**	**14.8**	**14.0**	**13.8**	**13.5**	WP316L, Cl. S & WX	A403
20.0	. . .	*20.0*	. . .	*20.0*	**18.9**	**17.5**	**16.5**	**16.0**	**15.6**	F316LN	A182
20.0	. . .	*20.0*	. . .	*20.0*	**18.9**	**17.5**	**16.5**	**16.0**	**15.6**	WP316LN, Cl. S & WX	A403
16.7	. . .	*16.7*	. . .	*16.7*	**15.8**	**14.7**	**14.0**	**13.7**	**13.4**	F304L	A182
16.7	. . .	*16.7*	. . .	*16.7*	**15.8**	**14.7**	**14.0**	**13.7**	**13.4**	WP304L, Cl. S & WX	A403
20.0	. . .	*20.0*	. . .	*20.0*	**18.6**	**17.5**	**16.4**	**16.1**	**15.9**	F304LN	A182
20.0	. . .	*20.0*	. . .	*20.0*	**18.6**	**17.5**	**16.4**	**16.1**	**15.9**	WP304LN, Cl. S & WX	A403

Copyright © 2015 by the American Society of Mechanical Engineers.
No reproduction may be made of this material without written consent of ASME.

(14) **Table K-1 Allowable Stresses in Tension for Metals for Chapter IX (Cont'd)**

Numbers in Parentheses Refer to Notes for Appendix K Table; Specifications Are ASTM Unless Otherwise Indicated

Material	Spec. No.	P-No. (1)	Type or Grade	Notes	Specified Min. Strength, ksi Tensile	Specified Min. Strength, ksi Yield
Stainless Steel (12) (Cont'd)						
Forgings and Fittings (Cont'd)						
18Cr–10Ni–Ti	A182	8	F321	(17)	75	30
18Cr–10Ni–Ti	A403	8	WP321, Cl. S & WX	(13)	75	30
18Cr–8Ni	A182	8	F304	(15)(17)	75	30
18Cr–8Ni	A403	8	WP304, Cl. S & WX	(13)(15)	75	30
16Cr–12Ni–2Mo	A182	8	F316	(15)(17)	75	30
16Cr–12Ni–2Mo	A403	8	WP316, Cl. S & WX	(13)(15)	75	30
18Cr–13Ni–3Mo	A403	8	WP317, Cl. S & WX	(13)(15)	75	30
18Cr–10Ni–Cb	A182	8	F347	(17)	75	30
18Cr–10Ni–Cb	A403	8	WP347, Cl. S & WX	(13)	75	30
18Cr–8Ni–N	A182	8	F304N	(15)	80	35
18Cr–8Ni–N	A403	8	WP304N, Cl. S & WX	(13)(15)	80	35
16Cr–12Ni–2Mo–N	A182	8	F316N	(15)	80	35
16Cr–12Ni–2Mo–N	A403	8	WP316N, Cl. S & WX	(13)(15)	80	35

Copyright © 2015 by the American Society of Mechanical Engineers.
No reproduction may be made of this material without written consent of ASME.

Table K-1 Allowable Stresses in Tension for Metals for Chapter IX (Cont'd) (14)

Numbers in Parentheses Refer to Notes for Appendix K Table; Specifications Are ASTM Unless Otherwise Indicated

Allowable Stress, ksi (Multiply by 1000 to Obtain psi), for Metal Temperature, °F, Not Exceeding [Notes (2)–(4)]											
Min. Temp. to 100	150	200	250	300	400	500	600	650	700	Type or Grade	Spec. No.
										Stainless Steel (12) (Cont'd) Forgings and Fittings (Cont'd)	
20.0	. . .	*20.0*	. . .	*20.0*	*20.0*	**19.4**	**18.3**	**17.9**	**17.5**	F321	A182
20.0	. . .	*20.0*	. . .	*20.0*	*20.0*	**19.4**	**18.3**	**17.9**	**17.5**	WP321, Cl. S & WX	A403
20.0	. . .	*20.0*	. . .	*20.0*	**18.6**	**17.5**	**16.4**	**16.1**	**15.9**	F304	A182
20.0	. . .	*20.0*	. . .	*20.0*	**18.6**	**17.5**	**16.4**	**16.1**	**15.9**	WP304, Cl. S & WX	A403
20.0	. . .	*20.0*	. . .	*20.0*	**19.3**	**18.0**	**17.0**	**16.7**	**16.3**	F316	A182
20.0	. . .	*20.0*	. . .	*20.0*	**19.3**	**18.0**	**17.0**	**16.7**	**16.3**	WP316, Cl. S & WX	A403
20.0	. . .	*20.0*	. . .	*20.0*	**19.3**	**18.0**	**17.0**	**16.7**	**16.3**	WP317, Cl. S & WX	A403
20.0	. . .	*20.0*	. . .	*20.0*	*20.0*	*20.0*	**19.4**	**19.0**	**18.6**	F347	A182
20.0	. . .	*20.0*	. . .	*20.0*	*20.0*	*20.0*	**19.4**	**19.0**	**18.6**	WP347, Cl. S & WX	A403
23.3	. . .	*23.3*	. . .	**22.5**	**20.3**	**18.8**	**17.8**	**17.6**	**17.2**	F304N	A182
23.3	. . .	*23.3*	. . .	**22.5**	**20.3**	**18.8**	**17.8**	**17.6**	**17.2**	WP304N, Cl. S & WX	A403
23.3	. . .	*23.3*	. . .	*23.3*	*23.3*	**22.2**	**21.0**	**20.5**	**20.1**	F316N	A182
23.3	. . .	*23.3*	. . .	*23.3*	*23.3*	**22.2**	**21.0**	**20.5**	**20.1**	WP316N, Cl. S & WX	A403

Copyright © 2015 by the American Society of Mechanical Engineers.
No reproduction may be made of this material without written consent of ASME.

(14) **Table K-1 Allowable Stresses in Tension for Metals for Chapter IX (Cont'd)**

Numbers in Parentheses Refer to Notes for Appendix K Table; Specifications Are ASTM Unless Otherwise Indicated

Material	Spec. No.	P-No. (1)	UNS Number	Condition	Size Range, in.	Notes	Specified Min. Strength, ksi	
							Tensile	Yield
Nickel and Nickel Alloy (12)								
Pipes and Tubes (5)								
Ni–Cu	B165	42	N04400	Annealed	> 5 O.D.	. . .	70	25
Ni–Cr–Fe	B167	43	N06600	H.W.	> 5 O.D.	. . .	75	25
Ni–Cr–Fe	B167	43	N06600	H.W. ann.	> 5 O.D.	. . .	75	25
Ni–Cu	B165	42	N04400	Annealed	≤ 5 O.D.	. . .	70	28
Ni–Cr–Fe	B167	43	N06600	H.W.	≤ 5 O.D.	. . .	80	30
Ni–Cr–Fe	B167	43	N06600	H.W. ann.	≤ 5 O.D.	. . .	80	30
Ni–Cr–Fe	B167	43	N06600	C.W. ann.	> 5 O.D.	. . .	80	30
Ni–Cr–Fe	B167	43	N06600	C.W. ann.	≤ 5 O.D.	. . .	80	35
Ni–Mo–Cr	B622	44	N10276	. . .	All	. . .	100	41
Ni–Cu	B165	42	N04400	Str. rel.	All	. . .	85	55
Forgings and Fittings								
Ni–Cu	B366	42	N04400	. . .	All	(13)(18)	70	25
Ni–Cu	B564	42	N04400	Annealed	All	. . .	70	25
Ni–Cr–Fe	B366	43	N06600	. . .	All	(13)(18)	75	25
Ni–Cr–Fe	B564	43	N06600	Annealed	All	. . .	80	35
Ni–Mo–Cr	B366	44	N10276	. . .	All	(13)	100	41
Ni–Mo–Cr	B564	44	N10276	Annealed	All	. . .	100	41
Rod and Bar								
Ni–Cu	B164	42	N04400	Annealed	All	. . .	70	25
Ni–Cr–Fe	B166	43	N06600	C.W. ann. & H.W. ann.	All	. . .	80	35
Ni–Cr–Fe	B166	43	N06600	H.W., A.W.	Sq., rec. & hex.	. . .	85	35
Ni–Cr–Fe	B166	43	N06600	H.W., A.W.	> 3 rd.	. . .	85	35
Ni–Cu	B164	42	N04400	H.W.	Rod, sq. & rec. ≤ 12, hex. ≤ $2\frac{1}{8}$	. . .	80	40
Ni–Cr–Fe	B166	43	N06600	H.W., A.W.	$\frac{1}{2}$ to 3 rd.	. . .	90	40
Ni–Mo–Cr	B574	44	N10276	. . .	All	. . .	100	41
Ni–Cr–Fe	B166	43	N06600	H.W., A.W.	$\frac{1}{4}$ to $\frac{1}{2}$ rd.	. . .	95	45

Copyright © 2015 by the American Society of Mechanical Engineers.
No reproduction may be made of this material without written consent of ASME.

Table K-1 Allowable Stresses in Tension for Metals for Chapter IX (Cont'd) (14)

Numbers in Parentheses Refer to Notes for Appendix K Table; Specifications Are ASTM Unless Otherwise Indicated

Allowable Stress, ksi (Multiply by 1000 to Obtain psi), for Metal Temperature, °F, Not Exceeding [Notes (2)–(4)]											
Min. Temp. to 100	150	200	250	300	400	500	600	650	700	UNS Number	Spec. No.
										Nickel and Nickel Alloy (12) Pipes and Tubes (5)	
16.7	. . .	14.7	. . .	13.7	13.2	13.2	13.2	13.2	13.2	N04400	B165
16.7	. . .	*16.7*	. . .	*16.7*	*16.7*	*16.7*	*16.7*	*16.7*	*16.7*	N06600	B167
16.7	. . .	*16.7*	. . .	*16.7*	*16.7*	*16.7*	*16.7*	*16.7*	*16.7*	N06600	B167
18.7	. . .	16.5	. . .	15.4	14.8	14.8	14.8	14.8	14.8	N04400	B165
20.0	. . .	*20.0*	. . .	*20.0*	*20.0*	*20.0*	*20.0*	*20.0*	*20.0*	N06600	B167
20.0	. . .	*20.0*	. . .	*20.0*	*20.0*	*20.0*	*20.0*	*20.0*	*20.0*	N06600	B167
20.0	. . .	*20.0*	. . .	*20.0*	*20.0*	*20.0*	*20.0*	*20.0*	*20.0*	N06600	B167
23.3	. . .	*23.3*	. . .	*23.3*	*23.3*	*23.3*	*23.3*	*23.3*	*23.3*	N06600	B167
27.3	. . .	*27.3*	. . .	*27.3*	*27.3*	**26.9**	**25.2**	**24.6**	**24.0**	N10276	B622
36.7	. . .	32.3	. . .	30.2	29.1	29.1	. . .	. . .	. . .	N04400	B165
										Forgings and Fittings	
16.7	. . .	14.7	. . .	13.7	13.2	13.2	13.2	13.2	13.2	N04400	B366
16.7	. . .	14.7	. . .	13.7	13.2	13.2	13.2	13.2	13.2	N04400	B564
16.7	. . .	*16.7*	. . .	*16.7*	*16.7*	*16.7*	*16.7*	*16.7*	*16.7*	N06600	B366
23.3	. . .	*23.3*	. . .	*23.3*	*23.3*	*23.3*	*23.3*	*23.3*	*23.3*	N06600	B564
27.3	. . .	*27.3*	. . .	*27.3*	*27.3*	**26.9**	**25.2**	**24.6**	**24.0**	N10276	B366
27.3	. . .	*27.3*	. . .	*27.3*	*27.3*	**26.9**	**25.2**	**24.6**	**24.0**	N10276	B564
											Rod and Bar
16.7	. . .	14.7	. . .	13.7	13.2	13.2	13.2	13.2	13.2	N04400	B164
23.3	. . .	*23.3*	. . .	*23.3*	*23.3*	*23.3*	*23.3*	*23.3*	*23.3*	N06600	B166
23.3	. . .	*23.3*	. . .	*23.3*	*23.3*	*23.3*	*23.3*	*23.3*	*23.3*	N06600	B166
23.3	. . .	*23.3*	. . .	*23.3*	*23.3*	*23.3*	*23.3*	*23.3*	*23.3*	N06600	B166
26.7	. . .	23.5	. . .	21.9	21.2	21.2	21.2	21.2	21.2	N04400	B164
26.7	. . .	24.5	. . .	23.1	22.0	21.2	20.7	20.6	20.4	N06600	B166
27.3	. . .	*27.3*	. . .	*27.3*	*27.3*	**26.9**	**25.2**	**24.6**	**24.0**	N10276	B574
30.0	. . .	21.2	. . .	21.2	21.2	21.2	21.2	21.2	21.1	N06600	B166

Copyright © 2015 by the American Society of Mechanical Engineers.
No reproduction may be made of this material without written consent of ASME.

(14) **Table K-1 Allowable Stresses in Tension for Metals for Chapter IX (Cont'd)**

Numbers in Parentheses Refer to Notes for Appendix K Table; Specifications Are ASTM Unless Otherwise Indicated

Material	Spec. No.	P-No. (1)	Grade	Notes	Specified Min. Strength, ksi	
					Tensile	Yield
Titanium and Titanium Alloy Pipes and Tubes (5))						
Ti	B861	51	2	. . .	50	40
Ti	B338	51	2	(6)	50	40
Ti–0.2 Pd	B861	51	7	. . .	50	40
Ti–0.2 Pd	B338	51	7	(6)	50	40
Ti	B861	52	3	. . .	65	55
Ti	B338	52	3	(6)	65	55
Forgings and Fittings						
Ti	B363	51	WPT2	(6)	50	40
Ti	B381	51	F2	. . .	50	40
Ti–0.2 Pd	B381	51	F7	. . .	50	40
Ti	B363	52	WPT3	(6)	65	55
Ti	B381	52	F3	. . .	65	55

Copyright © 2015 by the American Society of Mechanical Engineers.
No reproduction may be made of this material without written consent of ASME.

Table K-1 Allowable Stresses in Tension for Metals for Chapter IX (Cont'd) (14)

Numbers in Parentheses Refer to Notes for Appendix K Table; Specifications Are ASTM Unless Otherwise Indicated

Allowable Stress, ksi (Multiply by 1000 to Obtain psi), for Metal Temperature, °F, Not Exceeding [Notes (2)–(4)]											
Min. Temp. to 100	150	200	250	300	400	500	600	650	700	Grade	Spec. No.
										Titanium and Titanium Alloy Pipes and Tubes (5)	
26.7	. . .	21.0	. . .	17.1	13.1	9.9	7.6	. . .	. . .	2	B861
26.7	. . .	21.0	. . .	17.1	13.1	9.9	7.6	. . .	. . .	2	B338
26.7	. . .	21.0	. . .	17.1	13.1	9.9	7.6	. . .	. . .	7	B861
26.7	. . .	21.0	. . .	17.1	13.1	9.9	7.6	. . .	. . .	7	B338
36.7	. . .	29.3	. . .	23.8	19.1	15.0	11.4	. . .	. . .	3	B861
36.7	. . .	29.3	. . .	23.8	19.1	15.0	11.4	. . .	. . .	3	B338
										Forgings and Fittings	
26.7	. . .	21.0	. . .	17.1	13.1	9.9	7.6	. . .	. . .	WPT2	B363
26.7	. . .	21.0	. . .	17.1	13.1	9.9	7.6	. . .	. . .	F2	B381
26.7	. . .	21.0	. . .	17.1	13.1	9.9	7.6	. . .	. . .	F7	B381
36.7	. . .	29.3	. . .	23.8	19.1	15.0	11.4	. . .	. . .	WPT3	B363
36.7	. . .	29.3	. . .	23.8	19.1	15.0	11.4	. . .	. . .	F3	B381

Copyright © 2015 by the American Society of Mechanical Engineers.
No reproduction may be made of this material without written consent of ASME.

APPENDIX L
ALUMINUM ALLOY PIPE FLANGES

L300 GENERAL

This Appendix covers pressure–temperature ratings, materials, dimensions, and marking of forged aluminum alloy flanges, as an alternative to applying the rules in paras. 304.5.1(b) and 304.5.2(b). DN 15 (NPS ½) through DN 600 (NPS 24) flanges may be welding neck, slip-on, socket welding, lapped, or blind in ratings of Classes 150, 300, and 600.

Requirements and recommendations regarding bolting and gaskets are included.

L301 PRESSURE–TEMPERATURE RATINGS

L301.1 Ratings Basis

Ratings are maximum allowable working gage pressures at the temperatures shown in Tables L301.2M and L301.2U for the applicable material and pressure Class. For intermediate temperatures, linear interpolation is permitted.

L301.2 Ratings of Flanged Joints

(a) In addition to the considerations in para. F312.1, consideration must be given to the low modulus of elasticity of aluminum alloys. External moments should be limited, and controlled bolt tightening or other techniques may be necessary to achieve and maintain a leak-free joint.

(b) For ratings of slip-on and socket welding flanges made of Alloy 6061-T6, see Tables L301.2M and L301.2U, Note (3).

L301.3 Temperature Considerations

Application of the ratings in this Appendix to flanged joints at both high and low temperatures shall take into consideration the risk of leakage due to forces and moments developed in the connected piping or equipment. The following provisions are intended to minimize these risks.

L301.3.1 Flange Attachment. Slip-on and socket welding flanges are not recommended for service below −50°F if flanges are subject to thermal cycling.

L301.3.2 Differential Thermal Expansion and Conductivity. Because aluminum alloys have thermal expansion coefficients approximately twice those for steel, and thermal conductivity approximately three times that of steel, it may be necessary to provide for differential expansion and expansion rates between components of the flanged joint. Consideration shall be given to thermal transients (e.g., startup, shutdown, and upset) in addition to the operating temperature of the joint.

L301.4 Hydrostatic Test

A flange shall be capable of withstanding a hydrostatic test at 1.5 times its 100°F pressure rating.

L302 MARKING

Marking shall be in accordance with MSS SP-25, except as follows. Marking shall be stamped on the edge of each flange.

L302.1 Name

The manufacturer's name or trademark shall be applied.

L302.2 Material

The marking ASTM B247 shall be applied, followed by the applicable alloy and temper designations.

L302.3 Rating

The marking shall be the applicable rating Class — 150, 300, or 600.

L302.4 Designation

The marking B31.3L shall be applied.

L302.5 Size

The marking of NPS shall be applied. A reducing size shall be designated by its two nominal pipe sizes. See examples in Note (4) of Table 6, ASME B16.5.

L303 MATERIALS

L303.1 Flange Material

Flanges shall be forgings conforming to ASTM B247. For specific alloys and tempers, see Tables L301.2M and L301.2U. For precautions in use, see para. 323.5 and Appendix F, para. F323.

L303.1.1 Repair Welding of Flanges. Repair welding of flanges manufactured to this Appendix shall be restricted to any damaged areas of the weld bevel of welding neck flanges unless specifically approved by

Copyright © 2015 by the American Society of Mechanical Engineers.
No reproduction may be made of this material without written consent of ASME.

Table L301.2M Pressure–Temperature Ratings (Metric Units)

Material ASTM B247 Alloy, Temper	Class 150 Temperature [Note (1)]				Class 300 Temperature [Note (1)]				Class 600 Temperature [Note (1)]			
	38	66	93	121	38	66	93	121	38	66	93	121
3003-H112	275	275	240	240	725	690	655	655	1 415	1 380	1 345	1 275
6061-T6 [Note (2)]	1 895	1 860	1 825	1 795	4 965	4 895	4 825	4 655	9 930	9 790	9 655	9 345
6061-T6 [Note (3)]	1 265	1 240	1 215	1 195	3 310	3 265	3 215	3 105	6 620	6 525	6 435	6 230

GENERAL NOTE: Pressures are in kPa; temperatures are in °C.

NOTES:

(1) The minimum temperature is −269°C (−425°F). The maximum rating below 38°C (100°F) shall be the rating shown for 38°C.

(2) Ratings apply to welding neck, lapped, and blind flanges.

(3) Ratings apply to slip-on and socket welding flanges.

Table L301.2U Pressure–Temperature Ratings (U.S. Customary Units)

Material ASTM B247 Alloy and Temper	Class 150 Temperature [Note (1)]				Class 300 Temperature [Note (1)]				Class 600 Temperature [Note (1)]			
	100	150	200	250	100	150	200	250	100	150	200	250
3003-H112	40	40	35	35	105	100	95	95	205	200	195	185
6061-T6 [Note (2)]	275	270	265	260	720	710	700	675	1 440	1 420	1 400	1 355
6061-T6 [Note (3)]	185	180	175	175	480	475	465	450	960	945	935	905

GENERAL NOTE: Pressures are in psig; temperatures are in °F.

NOTES:

(1) The minimum temperature is −269°C (−425°F). The maximum rating below 38°C (100°F) shall be the rating shown for 38°C.

(2) Ratings apply to welding neck, lapped, and blind flanges.

(3) Ratings apply to slip-on and socket welding flanges.

Table L303.2 Aluminum Bolting Materials

ASTM Specification	Alloy	Temper
B211	2014	T6, T261
B211	2024	T4
B211	6061	T6, T261

GENERAL NOTE: Repair welding of bolting material is prohibited.

the Purchaser after consideration of the extent, location, and effect on temper and ductility. Repair welding of any area other than the weld bevel on 6061-T6 welding neck flanges shall restrict the pressure/temperature ratings to those specified for slip-on and socket welding flanges in Tables L301.2M and L301.2U. Any repair welding shall be performed in accordance with para. 328.6.

L303.2 Bolting Materials

Bolting listed in Table L303.2 and in ASME B16.5, Table 1B, may be used subject to the following limitations.

L303.2.1 High Strength Bolting. Bolting materials listed as high strength in ASME B16.5, Table 1B, may be used in any flanged joints. See para. L305.

L303.2.2 Intermediate Strength Bolting. Bolting materials in Table L303.2, and bolting listed as intermediate strength in ASME B16.5, Table 1B, may be used in any flanged joints. See para. L305.

L303.2.3 Low Strength Bolting. Bolting materials listed as low strength in ASME B16.5, Table 1B, may be used in Classes 150 and 300 flanged joints. See para. L305.

L303.3 Gaskets (14)

Gaskets listed in ASME B16.5, Nonmandatory Appendix B, Table B-1, Group Ia may be used with any rating Class and bolting.

L303.3.1 Gaskets for Low-Strength Bolting. If bolting listed as low strength (see para. L303.2.3) is used, gaskets listed in ASME B16.5, Nonmandatory Appendix B, Table B-1, Group Ia shall be used.

L303.3.2 Gaskets for Class 150 Flanged Joints. It is recommended that only gaskets listed in ASME B16.5, Nonmandatory Appendix B, Table B-1, Group Ia be used.

L303.3.3 Gaskets for Class 300 and Higher Flanged Joints. It is recommended that only gaskets listed in

Copyright © 2015 by the American Society of Mechanical Engineers.
No reproduction may be made of this material without written consent of ASME.

ASME B16.5, Nonmandatory Appendix B, Table B-1, Group I be used. For gaskets in Group Ib, line flanges should be of the welding neck or lapped joint type; controlled-torque tightening practices should be used.

L304 DIMENSIONS AND FACINGS

(a) Flanges shall meet the dimensional and tolerance requirements of ASME B16.5.

(b) Flange facing and facing finish shall be in accordance with ASME B16.5, except that small male and female facings (on ends of pipe) shall not be used.

L305 DESIGN CONSIDERATIONS

The following design considerations are applicable to all flanged joints that incorporate a flange manufactured to this Appendix:

(a) The differential expansion within a flanged joint must be considered; also, see para. F312.

(b) Where a gasket other than those recommended in para. L303.3 is specified, the designer shall verify by calculations the ability of the selected bolting to seat the selected gasket and maintain a sealed joint under the expected operating conditions without over-stressing the components.

Copyright © 2015 by the American Society of Mechanical Engineers.
No reproduction may be made of this material without written consent of ASME.

APPENDIX M
GUIDE TO CLASSIFYING FLUID SERVICES

See Fig. M300.

Copyright © 2015 by the American Society of Mechanical Engineers.
No reproduction may be made of this material without written consent of ASME.

Fig. M300 Guide to Classifying Fluid Services

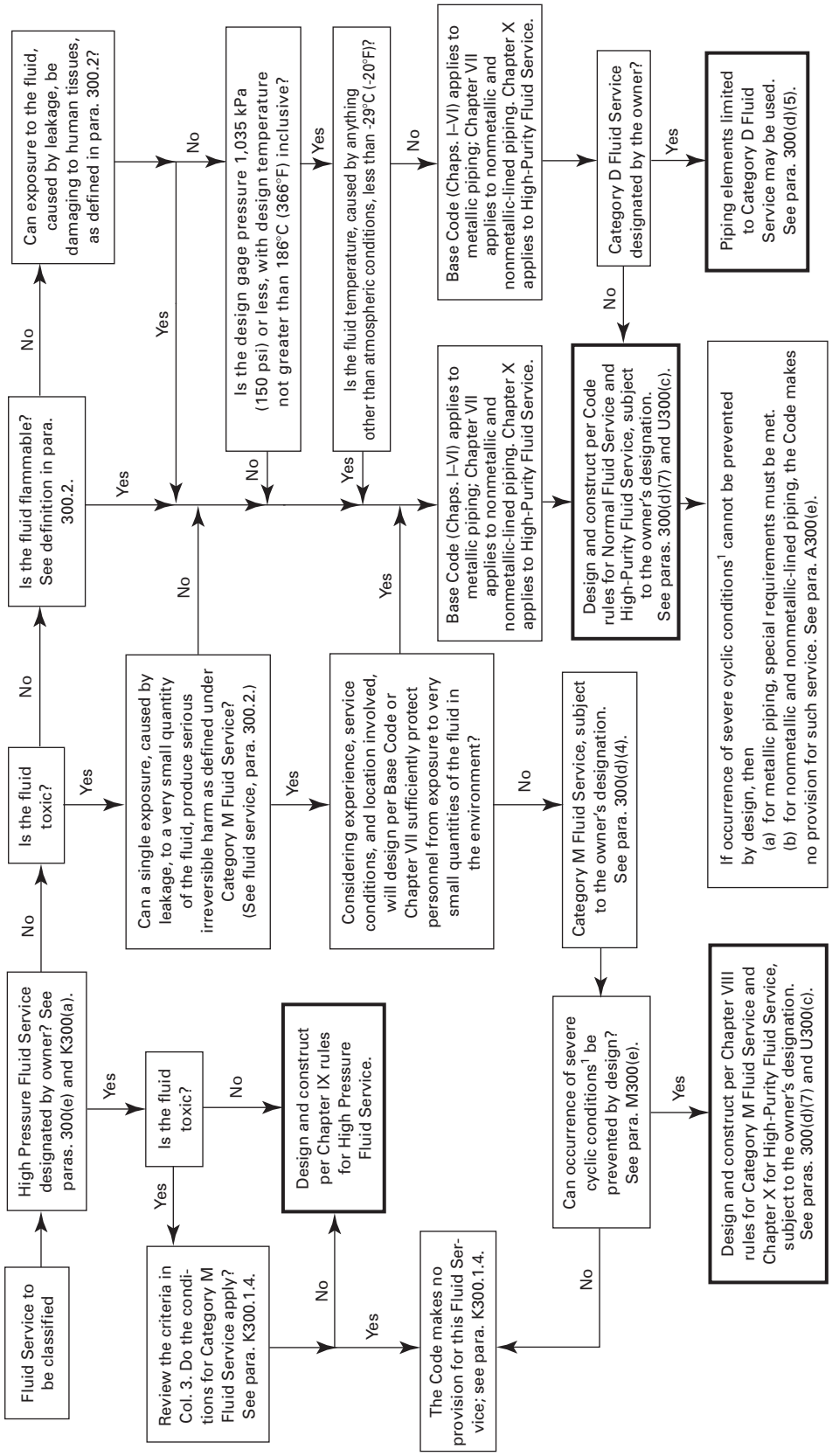

GENERAL NOTES:

(a) See paras. 300(b)(1), 300(d)(4) and (5), and 300(e) for decisions the owner must make. Other decisions are the designer's responsibility; see para. 300(b)(2).

(b) The term "fluid service" is defined in para. 300.2.

NOTE:

(1) Severe cyclic conditions are defined in para. 300.2. Requirements are found in Chapter II, Parts 3 and 4, and in paras. 323.4.2 and 241.4.3.

Copyright © 2015 by the American Society of Mechanical Engineers.
No reproduction may be made of this material without written consent of ASME.

APPENDIX N
APPLICATION OF ASME B31.3 INTERNATIONALLY

N100 INTRODUCTION

The ASME B31.3 Process Piping Code is an internationally recognized code for pressure piping. ISO 15649, Petroleum and natural gas industries — Piping, incorporates ASME B31.3 by normative reference and contains provisions for agreed common international practice that are additional to B31.3. ISO 15649 was prepared by Technical Committee TC 67, Subcommittee SC 6, Working Group WG 5.

N200 COMPLIANCE WITH THE EUROPEAN PRESSURE EQUIPMENT DIRECTIVE (PED)

The European Pressure Equipment Directive 97/23/EC is mandatory throughout all Member States of the European Union (EU) and the rest of the European Economic Area, effective May 30, 2002. The PED contains essential safety requirements that must be satisfied before a manufacturer can declare conformity with the Directive and place its product on the market anywhere in the European Community.

Some articles of the PED and its essential safety requirements are either not satisfied or are not addressed by ASME B31.3, and aspects of ASME B31.3 differ from the PED and the essential safety requirements.

Examples of where essential safety requirements are not fully satisfied by ASME B31.3 are as follows:

(a) decomposition of unstable fluids
(b) draining and venting
(c) short duration pressure surge
(d) temperature monitoring devices
(e) external fire
(f) marking and labeling
(g) operating instructions
(h) route of underground piping
(i) joint coefficients
(j) listed materials

To assist industry in using ASME B31.3, the Engineering Equipment and Materials Users' Association (EEMUA) has cooperated with the European Petroleum Industry Association (Europia) to publish CEN/TR 14549 — Guide to the use of ISO 15649 and ANSI/ASME B31.3 for piping in Europe in compliance with the Pressure Equipment Directive.

The format of the guide is that of a set of additional and modified requirements to ISO 15649 and ASME B31.3 that are required by the PED. It also gives a more-detailed explanation of the principal aspects and processes that require attention in order to be in compliance with the PED, especially where different from industry practice that was current before May 2002.

The full text of the PED can be found at http://ec.europa.eu/enterprise/sectors/pressure-and-gas/documents/ped/.

Copyright © 2015 by the American Society of Mechanical Engineers.
No reproduction may be made of this material without written consent of ASME.

(14)

APPENDIX P

DELETED

Copyright © 2015 by the American Society of Mechanical Engineers.
No reproduction may be made of this material without written consent of ASME.

APPENDIX Q
QUALITY SYSTEM PROGRAM

[This Appendix is a Code requirement only when specified by the owner in accordance with para. 300(b)(1).]

Design, construction, inspection, examination, testing, manufacture, fabrication, and erection of piping in accordance with this Code shall be performed under a Quality System Program following the principles of an appropriate standard such as the ISO 9000 series.[1] The details describing the quality system shall be documented and shall be available upon request. A determination of the need for registration and/or certification of the quality system program shall be the responsibility of the owner.

---

[1] The series is also available from the American National Standards Institute (ANSI) and the American Society for Quality (ASQ) as American National Standards that are identified by the prefix "Q," replacing the prefix "ISO." Each standard of the series is listed under Appendix E.

Copyright © 2015 by the American Society of Mechanical Engineers.
No reproduction may be made of this material without written consent of ASME.

APPENDIX S
PIPING SYSTEM STRESS ANALYSIS EXAMPLES

S300 INTRODUCTION

The example in this Appendix is intended to illustrate the application of the rules and definitions in Chapter II, Part 5, Flexibility and Support; and the stress limits of para. 302.3.5. The loadings and conditions necessary to comply with the intent of the Code are presented.

S300.1 Definitions and Nomenclature

global axes: These are Cartesian X, Y, and Z axes. In this Appendix, vertically upward is taken to be the +Y direction with gravity acting in the −Y direction.

P_j*:* piping internal pressure; see para. 301.2; when more than one condition exists for the piping system, each is subscripted (e.g., P_1, P_2, …)

T_j*:* pipe maximum or minimum metal temperature; see paras. 301.3 and 319.3.1(a); when more than one condition exists for the piping system, each is subscripted (e.g., T_1, T_2, …)

Y+: a "single acting support" that provides support in only the vertically upward direction and is considered to be "active" when the pipe exerts a downward force on the support. The pipe is free to move upward, i.e., the pipe "lifts off" the support; the support in the "lift-off" situation is considered to be "removed" from providing support, i.e., inactive, during the load condition considered.

S301 EXAMPLE 1: CODE COMPLIANT PIPING SYSTEM

S301.1 Example Description

This example is intended to illustrate the design of an adequately supported and sufficiently flexible piping system. The piping system in Fig. S301.1 is fabricated from ASTM A106 Grade B seamless pipe (i.e., $E = 1.00$); the pipe is DN 400 (NPS 16) with a nominal wall thickness of 9.53 mm (0.375 in.), 127 mm (5 in.) thickness of calcium silicate insulation, and 1.59 mm (0.063 in.) corrosion allowance; the fluid has a specific gravity of 1.0. The equivalent number of cycles expected for the piping system is fewer than 7 000 [i.e., $f = 1.00$ in accordance with para. 302.3.5(d)].

The piping system is in normal fluid service. The installation temperature is 21°C (70°F). The reference modulus of elasticity used for the piping analysis is 203.4 GPa (29.5 Msi) from Appendix C, Table C-6 in accordance with paras. 319.3.2 and 319.4.4, and Poisson's ratio is 0.3 in accordance with para. 319.3.3.

Fig. S301.1 Simple Code Compliant Model

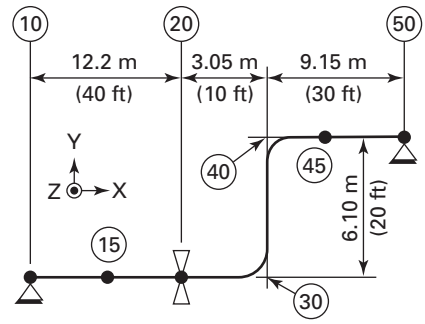

Table S301.1 Temperature/Pressure Combinations

Conditions	Pressure	Temperature
Design conditions	3 795 kPa (550 psi)	288°C (550°F)
Operating (P_1,T_1) maximum metal temperature	3 450 kPa (500 psi)	260°C (500°F)
Operating (P_2,T_2) minimum metal temperature	0 kPa (0 psi)	−1°C (30°F)
Installation temperature	0 kPa (0 psi)	21°C (70°F)

The piping internal pressure, maximum and minimum metal temperatures expected during normal operation, and the design conditions are listed in Table S301.1. The design conditions are set sufficiently in excess of the operating conditions so as to provide additional margin on the allowable stress for pressure design as required by the owner.

S301.2 Design Conditions

The design conditions establish the pressure rating, flange ratings, component ratings, and minimum required pipe wall thickness in accordance with para. 301.2.1. For example, ASME B16.5 requires a minimum of Class 300 for ASTM A105 flanges. Also, the minimum required pipe wall thickness, t_m, is determined from the

Copyright © 2015 by the American Society of Mechanical Engineers.
No reproduction may be made of this material without written consent of ASME.

design conditions by inserting eq. (3a) into eq. (2); terms are defined in para. 304.1.1 and Appendix J.

E = 1.0
P = design pressure
= 3 795 kPa (550 psi)
S = allowable stress from Appendix A, Table A-1
= 125 MPa (18.1 ksi) at design temperature 288°C (550°F)
Y = 0.4 from Table 304.1.1

Insert eq. (3a) into eq. (2).

$$t_m = t + c = \frac{PD}{2(SE + PY)} + c$$

$$= \frac{(3795 \text{ kPa})(406.4 \text{ mm})}{2[(125 \text{ MPa})(1.00) + (3795 \text{ kPa})(0.4)]} + 1.59 \text{ mm}$$

$$= 6.10 \text{ mm} + 1.59 \text{ mm} = 7.69 \text{ mm (0.303 in.)}$$

In accordance with para. 304.1.2(a), t must be less than $D/6$ for eq. (3a) to be appropriate without considering additional factors to compute the pressure design thickness, t (i.e., $t < D/6$, or 7.69 mm < 406.4 mm/6). Since 7.69 mm (0.303 in.) < 67.7 mm (2.67 in.), eq. (3a) is applicable without special consideration of factors listed in para. 304.1.2(b).

Now select a pipe schedule of adequate thickness. Determine the specified minimum pipe wall thickness, T, from nominal pipe wall thickness, $\overline{T}$, considering a mill tolerance of 12.5%.

Select DN 400 (NPS 16) Schedule 30/STD nominal wall thickness from ASME B36.10M.

$\overline{T}$ = 9.53 mm (0.375 in.)
T = (9.53 mm)(1.00 − 0.125) = 8.34 mm (0.328 in.)

Since $T \geq t_m$ (i.e., 8.34 mm > 7.69 mm), the selection of the nominal pipe wall thickness, $\overline{T}$, for Schedule 30/STD pipe is acceptable. The long radius elbows specified for this piping system are in accordance with ASME B16.9 and are specified to be for use with Schedule 30/STD wall thickness pipe.

S301.3 Computer Model Input

Tables S301.3.1 and S301.3.2 list the "node numbers," lengths, etc., for each piping element displayed in Fig. S301.1. A bend radius of 1.5 times the nominal pipe diameter [i.e., 609.6 mm (24 in.)] and nominal wall thickness of 9.53 mm (0.375 in.) are used for the elbows in the computer model.

Generic computer program option "flags" are as follows:

(a) include pressure stiffening on elbows

(b) exclude pressure thrust and Bourdon effects

(c) use nominal section properties for both the stiffness matrix and the displacement stress analysis

(d) use "nominal less allowances" section properties for sustained stress, S_L

Table S301.3.1 Generic Pipe Stress Model Input

Term	Value
Operating conditions:	
internal pressure, P_1	3 450 kPa (500 psi)
maximum metal temp., T_1	260°C (500°F)
minimum metal temp., T_2	−1°C (30°F)
installation temperature	21°C (70°F)
Line size	DN 400 (NPS 16)
Pipe	Schedule 30/STD, 9.53 mm (0.375 in.)
Mechanical allowance, c	1.59 mm (0.063 in.)
Mill tolerance	12.5%
Elbows	Long radius
Fluid specific gravity	1.0
Insulation thickness	127 mm (5 in.)
Insulation density	176 kg/m^3 (11.0 lbm/ft^3)
Pipe material	ASTM A106 Grade B
Pipe density	7 833.4 kg/m^3 (0.283 lbm/in.^{3})
Total weight	7 439 kg (16,400 lbm)
Unit weight	248.3 kg/m (166.9 lbm/ft)

(e) include axial load and internal pressure force in the sustained stress, S_L

(f) intensify the elbows' in-plane bending moment in the calculation of the elbows' effective stress due to sustained loads, S_L

S301.4 Pressure Effects

For the operating, sustained, and displacement stress range load cases, the effect of pressure stiffening on the elbows is included to determine the end reactions in accordance with Appendix D, Note (7). The effects of pressure-induced elongation and Bourdon effects are not included, as both are deemed negligible for this particular example.

S301.5 The Operating Load Case

The operating load case is used to determine the operating position of the piping and reaction loads for any attached equipment, anchors, supports, guides, or stops. The operating load case is based on the temperature range from the installation temperature of 21°C (70°F) to the maximum operating metal temperature of 260°C (500°F), in accordance with para. 319.3.1(b). The operating load case in this example also includes the effects of internal pressure, pipe weight, insulation weight, and fluid weight on the piping system. Both pipe stiffness and stress are based on the nominal thickness of the pipe. Pipe deflections and internal reaction loads for the operating load case are listed in Table S301.5.1. Piping loads acting on the anchors and support structure are listed in Table S301.5.2.

Copyright © 2015 by the American Society of Mechanical Engineers.
No reproduction may be made of this material without written consent of ASME.

Table S301.3.2 Element Connectivity, Type, and Lengths

From	To	D_X, m (ft)	D_Y, m (ft)	Element Type
10	15	6.10 (20)	. . .	10 anchor 15 bisection node
15	20	6.10 (20)	. . .	20 Y support
20	30	3.05 (10)	. . .	Three-node elbow [Note (1)]
30	40	. . .	6.10 (20)	Three-node elbow [Note (1)]
40	45	3.05 (10)	. . .	Informational node
45	50	6.10 (20)	. . .	50 anchor

GENERAL NOTE: This piping system is planar, i.e., $D_Z = 0$ m (ft) for each piping element.

NOTE:

(1) The specified element lengths are measured to and/or from each elbow's tangent intersection point.

Table S301.5.1 Operating Load Case Results: Internal Loads and Deflections

Node Number	Axial Force, N (lb) (Signed) [Note (1)]	Bending Moment, N-m (ft-lb) (Unsigned) [Note (1)]	Horizontal Deflection, mm (in.) [Note (1)]	Vertical Deflection, mm (in.) [Note (1)]
10	+26 500 (+5,960)	21 520 (15,870)	0.00	0.00
15	−26 500 (−5,960)	10 710 (7,900)	18.3 (0.72)	−1.3 (−0.05)
20	−26 500 (−5,960)	47 560 (35,080)	36.7 (1.44)	0.00
30 near	−26 500 (−5,960)	57 530 (42,440)	44.0 (1.73)	−3.7 (−0.14)
30 mid	−46 300 (−10,410)	69 860 (51,530)	44.7 (1.76)	−2.3 (−0.09)
30 far	−37 800 (−8,500)	65 320 (48,180)	41.4 (1.63)	0.4 (0.02)
40 near	−25 920 (−5,830)	63 930 (47,160)	−23.0 (−0.91)	15.1 (0.59)
40 mid	−36 250 (−8,150)	70 860 (52,270)	−26.4 (−1.04)	17.8 (0.70)
40 far	−26 500 (−5,960)	65 190 (48,080)	−25.7 (−1.01)	19.2 (0.75)
45	−26 500 (−5,960)	14 900 (10,990)	−18.3 (−0.72)	13.5 (0.53)
50	−26 500 (−5,960)	47 480 (35,030)	0.00	0.00

NOTE:

(1) Loads and deflections are averaged from commercial programs with a variance within units' conversion tolerance.

Table S301.5.2 Operating Load Case Results: Reaction Loads on Supports and Anchors

	Global Axis Forces and Moments		
Node	F_X, N (lb) (Signed) [Note (1)]	F_Y, N (lb) (Signed) [Note (1)]	M_Z, N-m (ft-lb) (Unsigned) [Note (1)]
10 anchor	−26 500 (−5,960)	−12 710 (−2,860)	21 520 (15,870)
20 support	. . .	−63 050 (−14,180)	. . .
50 anchor	+26 500 (+5,960)	+2 810 (+630)	47 480 (35,030)

NOTE:

(1) Loads and deflections are averaged from commercial programs with a variance within units' conversion tolerance.

Copyright © 2015 by the American Society of Mechanical Engineers.
No reproduction may be made of this material without written consent of ASME.

Table S301.6 Sustained Forces and Stresses [Allowable, S_h = 130 MPa (18,900 psi)]

Node	Axial Force, N (lb) (Signed) [Note (1)]	Bending Moment, N-m (ft-lb) (Unsigned) [Note (1)]	Sustained Stress, S_L, kPa (psi) [Note (2)]
10 anchor	+3 270 (+735)	17 260 (12,730)	59 100 (8,560)
20 support	−3 270 (−735)	56 130 (41,400)	99 200 (14,370)
30 far	−19 880 (−4,470)	16 320 (12,040)	72 700 (10,540)
40 far	+3 270 (+735)	2 340 (1,730)	46 050 (6,680)
50 anchor	+3 270 (+735)	37 860 (27,930)	80 350 (11,650)

NOTES:
(1) Loads, deflections, and stresses are averaged from commercial programs with a variance within units' conversion tolerance.
(2) Axial forces have their sign retained and do not include the signed axial pressure force, which is also included in the sustained stress, S_L.

S301.6 The Sustained Load Case

Sustained stresses due to the axial force, internal pressure, and intensified bending moment in this example are combined to determine the sustained longitudinal stress, S_L. The sustained load case excludes thermal effects and includes the effects of internal pressure [P_1 = 3450 kPa (500 psi)], pipe weight, insulation weight, and fluid weight on the piping system.

Nominal section properties are used to generate the stiffness matrix and sustained loads for the computer model in accordance with para. 319.3.5. The nominal thickness, less allowances, is used to calculate the section properties for the sustained stress, S_L, in accordance with para. 302.3.5(c).

A summary of the sustained load case internal reaction forces, moments, and sustained stresses, S_L, is provided in Table S301.6. Since this example model lies in only one plane, only the sustained bending stress due to the in-plane bending moment is not zero. The in-plane bending moment is intensified at each elbow by the appropriate index for an unflanged elbow. Note that sustained stresses for the nodes listed in Table S301.6 do not exceed the 130 MPa (18,900 psi) sustained allowable stress, S_h, for A 106 Grade B piping at the maximum metal temperature, T_1 = 260°C (500°F), from Appendix A, Table A-1. By limiting S_L to the sustained allowable, S_h, the piping system is deemed adequately protected against collapse.

S301.7 The Displacement Stress Range Load Case

The displacement stress range, S_E, in this example is based on the temperature range from the installation [21°C (70°F)] to minimum metal temperature [T_2 = −1°C (30°F)] and from the installation [21°C (70°F)] to maximum metal temperature for the thermal cycles under analysis [T_1 = 260°C (500°F)], in accordance with para. 319.3.1(a). The displacement stress range, S_E, for each element is calculated in accordance with eq. (17) and is listed in Table S301.7, along with the internal reaction loads. Nominal section properties are used to generate the stiffness matrix and displacement stress in the piping in accordance with para. 319.3.5. Since this example model lies in only one plane, only the in-plane bending moment is not zero. The in-plane moment is intensified at each elbow by the appropriate Appendix D stress intensification factor, i_i, for an unflanged elbow.

For simplicity, the allowable displacement stress range, S_A, is calculated in accordance with eq. (1a). Though eq. (1a) is used in this example, it is also acceptable to calculate S_A in accordance with eq. (1b), which permits S_A to exceed the eq. (1a) value for each piping element, based on the magnitude of each element's sustained stress, S_L.

The following terms are as defined in para. 302.3.5(d) and Appendix J:

f = 1.00 for ≤ 7 000 equivalent cycles, from Fig. 302.3.5 or eq. (1c)

$S_A = f\,(1.25S_c + 0.25S_h)$
= (1.00)[(1.25)(138 MPa) + (0.25)(130 MPa)]
= 205 MPa (29,725 psi)

S_c = allowable stress from Appendix A, Table A-1
= 138 MPa (20.0 ksi) at T_2

S_h = allowable stress from Appendix A, Table A-1
= 130 MPa (18.9 ksi) at T_1

T_1 = maximum metal temperature
= 260°C (500°F)

T_2 = minimum metal temperature
= −1°C (30°F)

Note that each piping element's displacement stress range, based on minimum to maximum metal temperature for the thermal cycles under analysis, S_E, does not exceed the eq. (1a) allowable, S_A. By limiting S_E to S_A, the piping system is deemed adequate to accommodate up to 7 000 full excursion equivalent cycles.

Copyright © 2015 by the American Society of Mechanical Engineers.
No reproduction may be made of this material without written consent of ASME.

Table S301.7 Displacement Stress Range [S_A = 205 MPa (29,725 psi)]

	Global Axis Forces and Moments			
Node	F_X, N (lb) (Unsigned) [Note (1)]	F_Y, N (lb) (Unsigned) [Note (1)]	M_Z, N-m (ft-lb) (Unsigned) [Note (1)]	S_E From Eq. (17), kPa (psi) [Note (1)]
10 anchor	25 070 (5,640)	1 130 (260)	4 600 (3,390)	4 000 (580)
20 support	25 070 (5,640)	1 130 (260)	9 250 (6,820)	8 040 (1,170)
30 mid	25 070 (5,640)	19 330 (4,350)	60 250 (44,440)	137 000 (19,870)
40 mid	25 070 (5,640)	19 330 (4,350)	76 740 (56,600)	174 500 (25,300)
50 anchor	25 070 (5,640)	19 330 (4,350)	92 110 (67,940)	79 900 (11,600)

NOTE:
(1) Loads, deflections, and stresses are averaged from commercial programs with a variance within units' conversion tolerance.

Considering both the sustained and displacement stress range load cases, the piping system is compliant with the requirements of the Code; redesign of the piping system is not required unless the sustained or operating reaction loads at either anchor data point 10 or 50 exceed the allowable loads for the attached equipment nozzle or the support structure at node 20 is overloaded. The nozzle load and support structure analyses are beyond the scope of this Appendix and are not addressed.

S302 EXAMPLE 2: ANTICIPATED SUSTAINED CONDITIONS CONSIDERING PIPE LIFT-OFF

S302.1 Example Description

This example is intended to illustrate the analysis of a piping system in which a portion of the piping lifts off at least one Y+ support in at least one operating condition. The emphasis of this example is to describe the effect this removal of support has on the determination of anticipated sustained conditions. The same principles utilized for this example would also apply for guides and stops (that are single directional or gap-type) that are not engaged during any anticipated operating condition.

The examples in this Appendix are intended for illustration purposes only and are not intended to portray the same as either adequate or even acceptable piping geometries and/or support scenarios. The piping system in Fig. S302.1 is the same in material and dimensional properties as in Example 1; see para. S301.1. Note that both the design and operating conditions are well below the creep regime; therefore, the piping system will not develop any permanent creep-related displacements, relaxation, or sag.

S302.2 Design Conditions

The design conditions are similar to those in the Example 1 model; see para. S301.2 and Table S302.1. Note that the minimum thickness remains unchanged from Example 1 even though the design conditions have increased slightly. The hydrotest pressure does increase from 6 039 kPa (875 psi) to 6 729 kPa (975 psi).

Fig. S302.1 Lift-Off Model

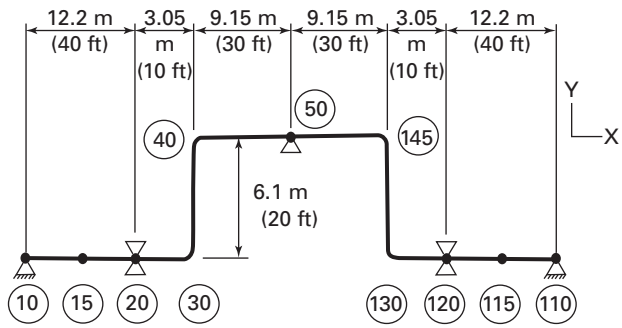

Table S302.1 Temperature/Pressure Combinations

Conditions	Pressure	Temperature
Design conditions	3 968 kPa (575 psi)	302°C (575°F)
Operating (P_1, T_1) maximum metal temperature (Operating Case 1)	3 795 kPa (550 psi)	288°C (550°F)
Operating (P_2, T_2) minimum metal temperature (Operating Case 2)	0 kPa (0 psi)	−1°C (30°F)
Installation temperature	. . .	21°C (70°F)

S302.3 Computer Model Input

Table S302.3 lists the node numbers, lengths, etc., for each piping component that is displayed in Fig. S302.1. The computer-based options are the same as those for the Example 1 model; see para. S301.3.

Copyright © 2015 by the American Society of Mechanical Engineers.
No reproduction may be made of this material without written consent of ASME.

Table S302.3 Generic Pipe Stress Model Input: Component Connectivity, Type, and Lengths

From	To	D_X, m (ft)	D_Y, m (ft)	Component Type
10	15	6.10 (20)	. . .	10 anchor 15 informational node
15	20	6.10 (20)	. . .	20 *Y* support
20	30	3.05 (10)	. . .	Three node elbow [Note (1)]
30	40	. . .	6.10 (20)	Three node elbow [Note (1)]
40	45	3.05 (10)	. . .	Informational node
45	50	6.10 (20)	. . .	50 *Y*+ support
110	115	−6.10 (−20)	. . .	110 anchor 115 informational node
115	120	−6.10 (−20)	. . .	120 *Y* support
120	130	−3.05 (−10)	. . .	Three node elbow [Note (1)]
130	140	. . .	6.10 (20)	Three node elbow [Note (1)]
140	145	−3.05 (−10)	. . .	Informational node
145	50	−6.10 (−20)	. . .	. . .

NOTE:
(1) The specified component lengths are measured to and/or from each elbow's tangent intersection point.

S302.4 Pressure Effects

The pressure effect considerations are the same as those for Example 1; see para. 301.4.

S302.5 The Operating Load Case

The operating condition evaluated and discussed in this example, Operating Case 1, includes the effects of pipe weight, insulation weight, fluid weight, internal pressure [P_1 = 3 795 kPa (550 psi)], and temperature [T_1 = 288°C (550°F)]. An operating load case is evaluated to determine the operating position of the piping and determine the reaction loads for any attached equipment, anchors, supports, guides, or stops. In particular, each operating load case's support scenario is evaluated or assessed by the designer in order to determine whether any anticipated sustained conditions need to be evaluated with one or more *Y*+ supports removed. Further operating load case discussion can be found in para. S301.5.

Piping loads acting on the anchors and support structure for Operating Case 1 are listed in Table S302.5.1. Note that only nodes 10 through 50 are listed in the following tables; this is both for convenience, since the model is symmetric, and for comparison to Example 1, e.g., the loads, deflections, and stresses for nodes 10 through 40 are the same as for nodes 110 through 140 except that some signs may be reversed.

S302.6 Sustained Conditions

S302.6.1 The Stress Due to Sustained Loads, S_L, Calculations. The stress due to (long-term) sustained loads, S_L, is computed in accordance with para. 320.2 for each sustained condition that is evaluated; see para. S302.6.2.

S302.6.2 Anticipated Sustained Conditions. All anticipated sustained conditions utilizing all possible support scenarios should be considered. The designer has identified four anticipated sustained conditions for this piping system; each is listed in Table S302.6.2.1, along with the support status of the node 50 *Y*+ support, as either assessed by analysis or determined by the designer. The designer has deemed the Sustained Condition 3 as both controlling the sustained design and requiring evaluation.

S302.6.3 Results for the Evaluated Sustained Condition. The Sustained Condition 3 reflects the support scenario of the Operating Case 1, excludes thermal effects, and includes the effects of internal pressure [P_1 = 3 795 kPa (550 psi)], pipe weight, insulation weight, and fluid weight on the piping system. A summary of the Sustained Condition 3 internal reaction forces, moments, and sustained stresses, S_L, appears in Table S302.6.3.1. See para. S301.6 for additional information concerning the sustained stress determination.

S302.7 Displacement Stress Range Load Cases

The displacement stress range load cases are not listed, since they are not the subject of this example.

S302.8 Code Compliance — Satisfying the Intent of the Code

The Sustained Condition 3 results indicate that the piping system is not protected against collapse for the cycles under analysis when considering the Operating

Copyright © 2015 by the American Society of Mechanical Engineers.
No reproduction may be made of this material without written consent of ASME.

Table S302.5.1 Results for Operating Case 1: Reaction Loads on Support and Anchors

Node	F_x, N (lb) (Signed) [Note (1)]	F_y, N (lb) (Signed) [Note (1)]	M_z, N-m (ft-lb) (Unsigned) [Note (1)]
10 anchor	−26 600 (−5,975)	−14 050 (−3,150)	27 000 (19,900)
20 support	. . .	−58 900 (−13,250)	. . .
50 *Y*+	. . .	0 [Note (2)]	. . .

NOTES:
(1) Loads and deflections are averaged from commercial programs with a variance within units' convergence tolerances. Magnitudes of loads for nodes 10 and 20 are the same for 110 and 120, but may differ in sign.
(2) No support is provided at the node 50 *Y*+ restraint for Operating Case 1.

Table S302.6.2.1 Sustained Load Condition Listing

Sustained Condition	Node 50's Support Status (Active/Removed)
1: As installed [Note (1)]	Active
2: P_1 [Note (2)]	Active
3: P_1 [Note (2)]	Inactive
4: P_2 [Note (2)]	Active

NOTES:
(1) The original (as-installed) condition considers only pipe weight and insulation weight without fluid contents or internal pressure.
(2) The Sustained Conditions reflect the support scenario of the related Operating Conditions, exclude thermal effects, and include the effects of the related internal pressure, pipe weight, insulation weight, and fluid weight on the piping system.

Table S302.6.3.1 Sustained Forces and Stresses for Sustained Condition 3 With Node 50 Support Removed [Allowable S_h = 124.5 MPa (18,100 psi)): Fails]

	Global Axis Forces and Moments [Note (1)]			
Node	F_x, N (lb) (Signed) [Note (2)]	F_y, N (lb) (Signed) [Note (2)]	M_z, N-m (ft-lb) (Unsigned)	Sustained S_L, kPa (psi) [Notes (2), (3)]
10 anchor	12 575 (2,825)	8 385 (1,885)	3 995 (2,945)	48 645 (7,055)
20 support	12 575 (2,825)	64 565 (14,515)	82 845 (61,095)	129 975 (18,850)
30 far	12 575 (2,825)	34 985 (7,865)	29 985 (22,115)	101 920 (14,780)
40 mid	12 575 (2,825)	21 950 (4,935)	32 770 (24,165)	108 525 (15,740)
50 *Y*+	12 575 (2,825)	0 [Note (4)]	62 885 (46,375)	109 385 (15,865)

NOTES:
(1) Loads and deflections are averaged from commercial programs with a variance within units' convergence tolerance. The magnitude of loads and stresses for nodes 10 through 40 are the same for 110 and 140, though the loads may differ in sign.
(2) Forces have their sign retained, but do not include the signed axial pressure force necessary to compute the axial stress, which is included in the sustained stress, S_L.
(3) Stress may differ by slightly more than units' conversion tolerance.
(4) No support is provided at the node 50 *Y*+ restraint for Sustained Condition 3.

Copyright © 2015 by the American Society of Mechanical Engineers.
No reproduction may be made of this material without written consent of ASME.

Fig. S303.1 Moment Reversal Model

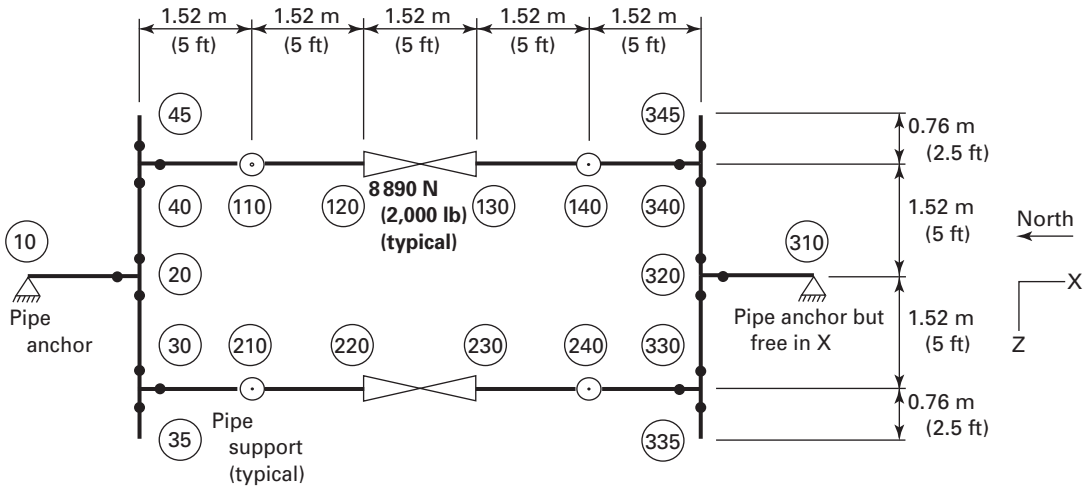

Case 1. Therefore, redesign of the piping system is required.

If the piping system is redesigned such that it is compliant with the intent of the Code, then the piping system would require no further attention unless the sustained, hydrotest, or operating reaction loads at either anchor data point 10 or 110 exceed the allowable loads for the attached equipment nozzle, or the support structure at either node 20 or 120 is overloaded. The nozzle loads and support structure analyses are beyond the scope of this Appendix and are not addressed. Although the occasional load cases are important to the design and analysis of a piping system, they are not discussed in this example.

S303 EXAMPLE 3: MOMENT REVERSAL

S303.1 Example Description

This example is intended to illustrate the flexibility analysis required for a piping system that is designed for more than one operating condition and also experiences a "reversal of moments" between any two of the anticipated operating conditions. The examples in this Appendix are intended for illustration purposes only and are not intended to portray the same as either adequate or even acceptable piping geometries and/or support scenarios. Both the design and operating conditions are well below the creep regime.

The piping system in Fig. S303.1 consists of two headers and two branches, which are referred to as gas "meter runs." Only one of the branches is in service (operating) at a given time; the out-of-service branch is purged and at ambient condition. The design specification calls for each of the meter run branches to alternate in and out of service once per week for the piping system's planned 20-year service life, i.e., $f = 1.20$ in accordance with para. 302.3.5(d). The piping system is fabricated from ASTM A53 Grade B pipe ($E = 1.00$), both piping headers are DN 600 (NPS 24) and the branches are DN 500 (NPS 20), and both branch and header are 9.53 mm (0.375 in.) thick. For simplicity, each piping segment or component is 1.524 m (5 ft) in length.

The piping system is in normal fluid service. The fluid is gaseous; is considered to add no weight; and to be neither a corrosive nor an erosive hazard, i.e., there is no corrosion allowance. The line is not insulated. The installation temperature is 4.5°C (40°F). The reference modulus of elasticity used is 203.4 GPa (29.5 Msi) and Poisson's ratio is 0.3. Consideration is given to the close proximity of the three tees in each header in accordance with the guidance in para. 319.3.6, and the stress intensification factors from Appendix D are considered to adequately represent the header tees for this piping system. The piping internal pressure, and minimum and maximum metal temperatures, expected during normal operation for each meter run and the design conditions, are listed in Table S303.1. The design conditions are set sufficiently in excess of the operating conditions so as to provide additional margin on the allowable as required by the owner.

S303.2 Design Conditions

The design conditions establish the pressure rating, flange ratings, components ratings, and minimum required pipe wall thickness. ASME B16.5 requires a minimum of Class 300 for ASTM A105 flanges. The minimum required wall thickness for both the branch and header is 4.4 mm (0.171 in.), considering a 12.5% mill tolerance; therefore, selection of the standard wall thickness of 9.5 mm (0.375 in.) is acceptable.

S303.3 Computer Model Input

Table S303.3 lists the node numbers, lengths, etc., for each piping component that is displayed in Fig. S303.1.

Copyright © 2015 by the American Society of Mechanical Engineers.
No reproduction may be made of this material without written consent of ASME.

Table S303.1 Pressure/Temperature Combinations

Condition	Header(s)		West Branch		East Branch	
	Pressure	Temperature	Pressure	Temperature	Pressure	Temperature
Design	2 069 kPa (300 psi)	149°C (300°F)	2 069 kPa (300 psi)	149°C (300°F)	2 069 kPa (300 psi)	149°C (300°F)
Operating Case 1 [Note (1)]	1 724 kPa (250 psi)	121°C (250°F)	1 724 kPa (250 psi)	121°C (250°F)	0 kPa (0 psi)	4.5°C (40°F)
Operating Case 2 [Note (2)]	1 724 kPa (250 psi)	121°C (250°F)	0 kPa (0 psi)	4.5°C (40°F)	1 724 kPa (250 psi)	121°C (250°F)
Installation temperature	. . .	4.5°C (40°F)	. . .	4.5°C (40°F)	. . .	4.5°C (40°F)

GENERAL NOTE: For computer based temperature and pressure data input, consider the West Branch temperature and pressure to be in effect from nodes 30 through 330 as listed in Table S303.3. Likewise, consider the East Branch temperature and pressure to be in effect from nodes 40 through 340 as listed in Table S303.3; see para. S303.3.

NOTES:

(1) East Branch is at ambient conditions.

(2) West Branch is at ambient conditions.

Table S303.3 Generic Pipe Stress Model Input: Component Connectivity, Type, and Lengths

From	To	D_X, m (ft)	D_Z, m (ft)	Component Type
10	20	1.52 (5)	. . .	10 anchor (DN 600 Header) 20 welding tee
20	30	. . .	1.52 (5)	30 welding tee
30	35	. . .	0.76 (2.5)	35 simulated end cap
20	40	. . .	−1.52 (−5)	40 welding tee
40	45	. . .	−0.76 (−2.5)	45 end cap
40	110	1.52 (5)	. . .	(East DN 500 Branch) 110 Y support
110	120	1.52 (5)	. . .	120 pipe segment
120	130	1.52 (5)	. . .	8 890 N (2,000 lb) meter
130	140	1.52 (5)	. . .	140 pipe segment
140	340	1.52 (5)	. . .	340 welding tee
30	210	1.52 (5)	. . .	(West DN 500 Branch) 210 Y support
210	220	1.52 (5)	. . .	220 pipe segment
220	230	1.52 (5)	. . .	8 890 N (2,000 lb) meter
230	240	1.52 (5)	. . .	240 pipe segment
240	330	1.52 (5)	. . .	330 welding tee
310	320	−1.52 (−5)	. . .	(DN 600 Header) 310 anchor [free in the X (axial) direction] 320 welding tee
320	330	. . .	1.52 (5)	330 welding tee
330	335	. . .	0.76 (2.5)	335 end cap
320	340	. . .	−1.52 (−5)	340 welding tee
340	345	. . .	−0.76 (−2.5)	345 end cap

GENERAL NOTE: This piping system is planar, i.e., $D_Y = 0$ m (0 ft) for each piping component.

Copyright © 2015 by the American Society of Mechanical Engineers.
No reproduction may be made of this material without written consent of ASME.

Note that flanges and valve components are not explicitly included in the model listing in Table S303.3. For simplicity, an entire branch (from tee centerline to tee centerline) is considered to be at the operating conditions listed in Table S303.1, e.g., the East meter run branch from nodes 40 through 340 operates at 1 724 kPa (250 psi) and 121°C (250°F) for Operating Case 2. The computer-based options are the same as those for the Example 1 model, except that pressure stiffening is not included in the analyses for this example; see para. S301.3.

S303.4 Pressure Effects

Neither pressure stiffening nor Bourdon effects are included in the analyses.

S303.5 Operating Load Case(s)

The operating load case is used to determine the operating position of the piping and reaction loads for any attached equipment, anchors, supports, guides, or stops. The owner has mandated in the design specification that the meter runs and piping be more than adequately supported. Therefore, the operating load case, while necessary to set the limits of the strain ranges, does not contribute to the emphasis of this example, and its output is not included.

S303.6 Sustained Load Case

Sustained stresses due to the axial force, internal pressure, and intensified bending moment in this example are combined to determine the sustained stress, S_L. For reasons similar to those expressed for the operating load case, the sustained load case output is not included.

S303.7 Displacement Stress Range Load Cases

The displacement stress range, S_E, is computed in accordance with para. 319.2.3(b), in which the strains evaluated for the original (as-installed) condition (for this particular example) are algebraically subtracted from the strains evaluated for the Operating Case 1 as listed in Table S303.1. Similarly, the displacement stress range, S_E, is computed from the algebraic strain difference evaluated from the as-installed condition to the Operating Case 2 as listed in Table S303.1. The individual displacement stress range, S_E, along with the internal reaction loads, is evaluated for each piping component in accordance with eq. (17) and is listed in Tables S303.7.1 and S303.7.2 for Operating Cases 1 and 2, respectively.

The algebraic strain difference between the two resultant case evaluations discussed above produces the largest overall stress differential for the piping system in accordance with paras. 319.2.1(d), 319.2.3(b), and 319.3.1(b), i.e., S_E, the "stress range corresponding to the total displacement strains." The resulting load combination and S_E for each piping component are listed in Table S303.7.3.

S303.8 Code Compliance — Satisfying the Intent of the Code

The piping system is compliant with the sustained load requirements of the Code. The displacement stress range from the original (as-installed) condition to each of the operating cases indicates the piping system is in compliance with the intent of the Code even when limited to the eq. (1a) allowable, S_A. But, the "stress range corresponding to the total displacement strains," which considers the algebraic strain difference between the two operating cases, indicates that the piping system is not protected against fatigue for the cycles under analysis even when considering the eq. (1b) allowable, S_A. Therefore, redesign of the piping system is required.

The redesign should consider the additional impact of average axial displacement stresses in accordance with the recommendations in para. 319.2.3(c). If the piping system is redesigned such that it is compliant with the intent of the code, then the piping system would require no further attention unless the sustained, hydrotest, or operating reaction loads at either anchor data point 10 or 310, or meter runs 130 or 230, exceeded the allowable loads for the attached equipment, nozzles, or support structure. The meter loads, nozzle loads, and support structure analyses are beyond the scope of this example. Although the occasional load cases are important to the design and analysis of a piping system, they are not discussed in this example.

Copyright © 2015 by the American Society of Mechanical Engineers.
No reproduction may be made of this material without written consent of ASME.

Table S303.7.1 Case 1: Displacement Stress Range [Eq. (1a) Allowable S_A = 248.2 MPa (36 ksi): Passes]

Node	Global Axis Forces and Moments: F_x, N (lb) (Signed) [Note (1)]	Global Axis Forces and Moments: M_y, N-m (ft-lb) (Signed) [Note (1)]	Eq. (17) S_E, kPa (psi) [Note (2)]
10 anchor	0	147 470 (108,755)	55 610 (8,065)
20 tee	0	−147 470 (−108,755)	189 945 (27,550)
30 tee	−78 485 (−17,645)	45 900 (33,850)	84 360 (12,235)
40 tee	78 485 (17,645)	45 900 (33,850)	84 360 (12,235)
110 *Y*	78 485 (17,645)	45 900 (33,850)	25 155 (3,650)
120	78 485 (17,645)	45 900 (33,850)	25 155 (3,650)
130 meter	78 485 (17,645)	45 900 (33,850)	25 155 (3,650)
140 *Y*	78 485 (17,645)	45 900 (33,850)	25 155 (3,650)
340 tee	78 485 (17,645)	45 900 (33,850)	84 360 (12,235)
210 *Y*	−78 485 (−17,645)	45 900 (33,850)	25 155 (3,650)
220	−78 485 (−17,645)	45 900 (33,850)	25 155 (3,650)
230 meter	−78 485 (−17,645)	45 900 (33,850)	25 155 (3,650)
240 *Y*	−78 485 (−17,645)	45 900 (33,850)	25 155 (3,650)
330 tee	−78 485 (−17,645)	45 900 (33,850)	84 360 (12,235)
310 anchor	0	−147 470 (−108,755)	55 610 (8,065)
320 tee	0	147 470 (108,755)	189 945 (27,550)

NOTES:

(1) Loads are averaged from commercial programs and are directly affected by the stiffness chosen for valves, flanges, and other relatively stiff components.

(2) Stress may differ by slightly more than units' conversion tolerance.

Copyright © 2015 by the American Society of Mechanical Engineers.
No reproduction may be made of this material without written consent of ASME.

Table S303.7.2 Case 2: Displacement Stress Range [Eq. (1a) Allowable S_A = 248.2 MPa (36 ksi): Passes]

	Global Axis Forces and Moments		
Node	F_x, N (lb) (Signed) [Note (1)]	M_y, N-m (ft-lb) (Signed) [Note (1)]	Eq. (17) S_E, kPa (psi) [Note (2)]
10 anchor	0	−147 470 (−108,755)	55 610 (8,065)
20 tee	0	147 470 (108,755)	189 945 (27,550)
30 tee	78 485 (17,645)	−45 900 (−33,850)	84 360 (12,235)
40 tee	−78 485 (−17,645)	−45 900 (−33,850)	84 360 (12,235)
110 *Y*	−78 485 (−17,645)	−45 900 (−33,850)	25 155 (3,650)
120	−78 485 (−17,645)	−45 900 (−33,850)	25 155 (3,650)
130 meter	−78 485 (−17,645)	−45 900 (−33,850)	25 155 (3,650)
140 *Y*	−78 485 (−17,645)	−45 900 (−33,850)	25 155 (3,650)
340 tee	−78 485 (−17,645)	−45 900 (−33,850)	84 360 (12,235)
210 *Y*	78 485 (17,645)	−45 900 (−33,850)	25 155 (3,650)
220	78 485 (17,645)	−45 900 (−33,850)	25 155 (3,650)
230 meter	78 485 (17,645)	−45 900 (−33,850)	25 155 (3,650)
240 *Y*	78 485 (17,645)	−45 900 (−33,850)	25 155 (3,650)
330 tee	78 485 (17,645)	−45 900 (−33,850)	84 360 (12,235)
310 anchor	0	147 470 (108,755)	55 610 (8,065)
320 tee	0	−147 470 (−108,755)	189 945 (27,550)

NOTES:

(1) Loads are averaged from commercial programs and are directly affected by the stiffness chosen for valves, flanges, and other relatively stiff components.

(2) Stress may differ by slightly more than units' conversion tolerance.

Copyright © 2015 by the American Society of Mechanical Engineers.
No reproduction may be made of this material without written consent of ASME.

Table S303.7.3 Load Combination Considering Cases 1 and 2, Total Strain Based: Displacement Stress Range [Eq. (1b) Allowable S_A = 379.8 MPa (55.1 ksi): Fails]

	Global Axis Forces and Moments [Note (1)]		Eq. (17)
Node	F_x, N (lb) (Signed)	M_y, N-m (ft-lb) (Signed)	S_E, kPa (psi) [Notes (2), (3)]
10 anchor	0	294 940 (217,510)	111 220 (16,130)
20 tee	0	−294 940 (−217,510)	379 890 (55,100)
30 tee	−156 970 (−35,290)	91 800 (67,700)	168 720 (24,470)
40 tee	156 970 (35,290)	91 800 (67,700)	168 720 (24,470)
110 *Y*	156 970 (35,290)	91 800 (67,700)	50 310 (7,300)
120	156 970 (35,290)	91 800 (67,700)	50 310 (7,300)
130 meter	156 970 (35,290)	91 800 (67,700)	50 310 (7,300)
140 *Y*	156 970 (35,290)	91 800 (67,700)	50 310 (7,300)
340 tee	156 970 (35,290)	91 800 (67,700)	168 720 (24,470)
210 *Y*	−156 970 (−35,290)	91 800 (67,700)	50 310 (7,300)
220	−156 970 (−35,290)	91 800 (67,700)	50 310 (7,300)
230 meter	−156 970 (−35,290)	91 800 (67,700)	50 310 (7,300)
240 *Y*	−156 970 (−35,290)	91 800 (67,700)	50 310 (7,300)
330 tee	−156 970 (−35,290)	91 800 (67,700)	168 720 (24,470)
310 anchor	0	−294 940 (−217,510)	111 220 (16,130)
320 tee	0	294 940 (217,510)	379 890 (55,100)

GENERAL NOTE: The sustained stress used in determining the eq. (1b) allowable for nodes 20 and 320 is S_L = 28 380 kPa (4,115 psi).

NOTES:

(1) Loads are averaged from commercial programs and are directly affected by the stiffness chosen for valves, flanges, and other relatively stiff components.

(2) Stress may differ by slightly more than units' conversion tolerance.

(3) The additional impact of average axial displacement stresses in accordance with the recommendations in para. 319.2.3(c) has not been included in determining the displacement stress range.

Copyright © 2015 by the American Society of Mechanical Engineers.
No reproduction may be made of this material without written consent of ASME.

APPENDIX V
ALLOWABLE VARIATIONS IN ELEVATED TEMPERATURE SERVICE

V300 APPLICATION

(a) This Appendix covers application of the Linear Life Fraction Rule, which provides a method for evaluating variations at elevated temperatures above design conditions where material creep properties [see para. V302(c)] control the allowable stress at the temperature of the variation. This Appendix is a Code requirement only when specified by the owner in accordance with the last sentence of para. 302.2.4(f)(1).

(b) Life Fraction analysis addresses only the gross strength of piping components; it does not consider local stress effects. It is the designer's responsibility to provide construction details suitable for elevated temperature design.

V300.1 Definitions

operating condition: any condition of pressure and temperature under which the design conditions are not exceeded.

excursion: any condition under which pressure or temperature, or both, exceed the design conditions.

service condition: any operating condition or excursion.

duration

(a) the extent of any service condition, hours

(b) the cumulative extent of all repetitions of a given service condition during service life, hours

service life: the life assigned to a piping system for design purposes, hours.

V301 DESIGN BASIS

Life Fraction analysis shall be performed in accordance with one of the following design basis options selected by the owner.

(a) All service conditions in the creep range and their durations are included.

(b) To simplify the analysis, less severe service conditions need not be individually evaluated if their durations are included with the duration of a more severe service condition.

V302 CRITERIA

(a) All of the criteria in para. 302.2.4 shall be met.

(b) Only carbon steels, low and intermediate alloy steels, austenitic stainless steels, and high nickel alloys are included.

(c) Service conditions are considered only in the calculation of the usage factors in accordance with para. V303 when the allowable stress at the temperature of those conditions in Table A-1 is based on the creep criteria stated in para. 302.3.2.

(d) Creep-fatigue interaction effects shall be considered when the number of cycles exceeds 100.

V303 PROCEDURE

The cumulative effect of all service conditions during the service life of the piping is determined by the Linear Life Fraction Rule in accordance with the following procedure.

V303.1 Calculations for Each Service Condition *i*

The following steps shall be repeated for each service condition considered.

V303.1.1 Equivalent Stress for Pressure

(a) Using eq. (V1), compute a pressure-based equivalent stress, S_{pi}

$$S_{pi} = S_d P_i / P_{\max} \tag{V1}$$

where

P_i = gage pressure, kPa (psig), during service condition i

$P_{\max}$ = maximum allowable gage pressure, kPa (psig), for continuous operation of pipe or component at design temperature, considering allowances, c, and mill tolerance, but without considering weld joint strength reduction factor, W; weld joint quality factors, E_j; or casting quality factor, E_c

S_d = allowable stress, MPa (ksi), at design temperature, °C (°F)

S_{pi} = pressure-based equivalent stress, MPa (ksi)

(b) Compute the maximum longitudinal stress, S_L, during service condition i, in accordance with para. 302.3.5(c).

(c) The equivalent stress, S_i, for use in para. V303.1.2 is the greater of the values calculated in (a) and (b) above, divided by their respective weld joint strength reduction factor, W, in accordance with para. 302.3.5(e).

V303.1.2 Effective Temperature. From Table A-1, find the temperature corresponding to a basic allowable

Copyright © 2015 by the American Society of Mechanical Engineers.
No reproduction may be made of this material without written consent of ASME.

stress equal to the equivalent stress, S_i, using linear interpolation if necessary. This temperature, T_E, is the effective temperature for service condition i.

V303.1.3 Larson–Miller Parameter. Compute the *LMP* for the basic design life for service condition i, using eq. (V2)

$$\left.\begin{aligned} \text{SI units:} \quad LMP &= (C + 5)(T_E + 273) \\ \text{U.S. Customary units:} \quad LMP &= (C + 5)(T_E + 460) \end{aligned}\right\} \text{(V2)}$$

where

C = 20 (carbon, low, and intermediate alloy steels)
= 15 (austenitic stainless steel and high nickel alloys)

T_E = effective temperature, °C (°F); see para. V303.1.2

V303.1.4 Rupture Life. Compute the rupture life, t_{ri}, h, using eq. (V3)

$$t_{ri} = 10^a \qquad \text{(V3)}$$

where

$$\text{SI units:} \quad a = \frac{LMP}{T_i + 273} - C$$

$$\text{U.S. Customary units:} \quad a = \frac{LMP}{T_i + 460} - C$$

and

T_i = temperature, °C (°F), of the component for the coincident operating pressure–temperature condition i under consideration

t_{ri} = allowable rupture life, h, associated with a given service condition i and stress, S_i

LMP and C are as defined in para. V303.1.3.

V303.2 Determine Creep-Rupture Usage Factor

The usage factor, u, is the summation of individual usage factors, t_i/t_{ri}, for all service conditions considered in para. V303.1. See eq. (V4).

$$u = \sum(t_i/t_{ri}) \qquad \text{(V4)}$$

where

i = as a subscript, 1 for the prevalent operating condition; i = 2, 3, etc., for each of the other service conditions considered

t_i = total duration, h, associated with any service condition, i, at pressure, P_i, and temperature, T_i

t_{ri} = as defined in para. V303.1.4

V303.3 Evaluation

The calculated value of u indicates the nominal amount of creep-rupture life expended during the service life of the piping system. If $u \leq 1.0$, the usage factor is acceptable including excursions. If $u > 1.0$, the designer shall either increase the design conditions (selecting piping system components of a higher allowable working pressure if necessary) or reduce the number and/or severity of excursions until the usage factor is acceptable.

V304 EXAMPLE (14)

The following example illustrates the application of the procedure in para. V303:

Pipe material: ASTM A691, Gr. 2¼Cr pipe using A387, Gr. 22 Cl. 1 plate
Pipe size: NPS 30 (30 in. O.D.)
Nominal pipe wall thickness: 0.85 in.
Corrosion allowance: 0.0625 in.
Mill tolerance: 0.01 in.
Design pressure: 250 psig
Design temperature: 1,050°F
Total service life: 175,200 hr

Three service conditions are considered.

(a) Normal operation is 157,200 hr at 250 psig, 1,025°F.

(b) Expect up to 16,000 hr at design conditions of 250 psig, 1,050°F.

(c) Total of 2,000 hr at excursion condition of 330 psig, 1,050°F. [This is a 32% variation above the design pressure and, with the owner's approval, it complies with the criteria of para. 302.2.4. As a simplification, and in accordance with para. V301(b), this 2,000 hr total includes less severe excursions.]

Compute pressure-based equivalent stress, S_{pi}, from eq. (V1).

From Table A-1, S_d = 5.7 ksi at 1,050°F.

$$P_{\max} = \frac{2(\overline{T} - \text{c} - \text{mill tol.}) \times SEW}{D - 2(\overline{T} - \text{c} - \text{mill tol.}) \times Y}$$

Letting $S = S_d$ and, in accordance with the definition of $P_{\max}$ in para. V303.1.1, $E = 1$ and $W = 1$,

$$P_{\max} = 306 \text{ psi}$$

$$S_{p1} = 5.7(250/306) = 4.65 \text{ ksi}$$
$$S_{p2} = 5.7(250/306) = 4.65 \text{ ksi}$$
$$S_{p3} = 5.7(330/306) = 6.14 \text{ ksi}$$

NOTE: In eq. (V1), design pressure could be used in this example for $P_{\max}$, as this will always be conservative. Here the actual $P_{\max}$ of the piping system is used.

The stress due to sustained loads, S_L, for each condition i, calculated in accordance with para. 320.2, is

$$S_{L1} = 3.0 \text{ ksi}$$
$$S_{L2} = 3.0 \text{ ksi}$$
$$S_{L3} = 3.7 \text{ ksi}$$

For pipe with a longitudinal weld ($E = 1$), W is 0.8, 0.77, and 1.0 for S_{p1}, S_{p2}, and S_{p3}, respectively. Note that condition 3 is short term, so $W = 1$. Also note that with the owner's approval, and in accordance with

Copyright © 2015 by the American Society of Mechanical Engineers.
No reproduction may be made of this material without written consent of ASME.

para. 302.3.5(f)(2), W may be larger than the W factors listed in Table 302.3.5. The designer chooses not to apply W for girth welds, so W is 1.00 for S_{L1}, S_{L2}, and S_{L3}. The equivalent stress, S_i, is the greater of S_{pi}/W and S_{Li}/W. Therefore, S_i is as follows:

$$\begin{aligned} S_1 &= \text{MAX}\ (S_{p1}/W,\ S_{L1}/W) \\ &= \text{MAX}\ (4.65/0.8,\ 3.0/1.0) \\ &= \text{MAX}\ (5.81,\ 3.00) = 5.81 \text{ ksi} \end{aligned}$$

$$\begin{aligned} S_2 &= \text{MAX}\ (S_{p2}/W,\ S_{L2}/W) \\ &= \text{MAX}\ (4.65/0.77,\ 3.0/1.0) \\ &= \text{MAX}\ (6.04,\ 3.00) = 6.04 \text{ ksi} \end{aligned}$$

$$\begin{aligned} S_3 &= \text{MAX}\ (S_{p3}/W,\ S_{L3}/W) \\ &= \text{MAX}\ (6.14/1.0,\ 3.7/1.0) \\ &= \text{MAX}\ (6.14,\ 3.70) = 6.14 \text{ ksi} \end{aligned}$$

From Table A-1, find the temperature, T_E, corresponding to each S_i.

$$\begin{aligned} T_{E1} &= 1{,}048°\text{F} \\ T_{E2} &= 1{,}043°\text{F} \\ T_{E3} &= 1{,}041°\text{F} \end{aligned}$$

Compute the LMP for each condition i using eq. (V2).

$$\begin{aligned} LMP &= (20 + 5)\ (1{,}048 + 460) = 37{,}690 \\ LMP &= (20 + 5)\ (1{,}043 + 460) = 37{,}567 \\ LMP &= (20 + 5)\ (1{,}041 + 460) = 37{,}513 \end{aligned}$$

Compute the rupture life, t_{ri}, using eq. (V3).

$$a = 37{,}690/(1{,}025 + 460) - 20 = 5.38$$
$$t_{r1} = 10^{5.38} = 240{,}187 \text{ hr}$$

$$a = 37{,}567/(1{,}050 + 460) - 20 = 4.88$$
$$t_{r2} = 10^{4.88} = 75{,}660 \text{ hr}$$

$$a = 37{,}513/(1{,}050 + 460) - 20 = 4.84$$
$$t_{r3} = 10^{4.84} = 69{,}700 \text{ hr}$$

Compute the usage factor, u, the summation of t_i/t_{ri}, for all service conditions.

$$\begin{aligned} t_1/t_{r1} &= 157{,}200/240{,}187 = 0.654 \\ t_2/t_{r2} &= 16{,}000/75{,}660 = 0.211 \\ t_3/t_{r3} &= 2{,}000/69{,}700 = 0.029 \end{aligned}$$

$$u = 0.654 + 0.211 + 0.029 = 0.895 < 1.0$$

Therefore, the excursion is acceptable.

Copyright © 2015 by the American Society of Mechanical Engineers.
No reproduction may be made of this material without written consent of ASME.

APPENDIX X
METALLIC BELLOWS EXPANSION JOINTS

(Design requirements of Appendix X are dependent on and compatible with EJMA standards.)

X300 GENERAL

The intent of this Appendix is to set forth design, manufacturing, and installation requirements and considerations for bellows type expansion joints, supplemented by the EJMA standards. It is intended that applicable provisions and requirements of Chapters I through VI of this Code shall be met, except as modified herein. This Appendix does not specify design details. The detailed design of all elements of the expansion joint is the responsibility of the manufacturer. This Appendix is not applicable to expansion joints in piping designed in accordance with Chapter IX.

X301 PIPING DESIGNER RESPONSIBILITIES

The piping designer shall specify the design conditions and requirements necessary for the detailed design and manufacture of the expansion joint in accordance with para. X301.1 and the piping layout, anchors, restraints, guides, and supports required by para. X301.2.

X301.1 Expansion Joint Design Conditions

The piping designer shall specify all necessary design conditions including the following.

X301.1.1 Static Design Conditions. The design conditions shall include any possible variations of pressure or temperature, or both, above operating levels. Use of a design metal temperature other than the fluid temperature for any component of the expansion joint shall be verified by computation, using accepted heat transfer procedures, or by test or measurement on similarly designed equipment in service under equivalent operating conditions.

X301.1.2 Cyclic Design Conditions. These conditions shall include coincident pressure, temperature, imposed end displacements and thermal expansion of the expansion joint itself, for cycles during operation. Cycles due to transient conditions (startup, shutdown, and abnormal operation) shall be stated separately. (See EJMA standards, C-4.1.5.2 on cumulative fatigue analysis, for guidance in defining cycles.)

X301.1.3 Other Loads. Other loads, including dynamic effects (such as wind, thermal shock, vibration, seismic forces, and hydraulic surge); and static loads, such as weight (insulation, snow, ice, etc.), shall be stated.

X301.1.4 Fluid Properties. Properties of the flowing medium pertinent to design requirements, including the owner-designated fluid service category, flow velocity and direction, for internal liners, etc., shall be specified.

X301.1.5 Other Design Conditions. Other conditions that may affect the design of the expansion joint, such as use of shrouds, external or internal insulation, limit stops, other constraints, and connections in the body (e.g., drains or bleeds) shall be stated.

X301.2 Piping Design Requirements

X301.2.1 General. Piping layout, anchorage, restraints, guiding, and support shall be designed to avoid imposing motions and forces on the expansion joint other than those for which it is intended. For example, a bellows expansion joint is not normally designed to absorb torsion. Pipe guides, restraints, and anchorage shall conform to the EJMA standards. Anchors and guides shall be provided to withstand expansion joint thrust forces when not self-restrained by tie rods, hinge bars, pins, etc. (See para. X302.1.) Column buckling of the piping (e.g., due to internal fluid pressure) shall also be considered.

X301.2.2 Design of Anchors

(a) Main Anchors. Main anchors shall be designed to withstand the forces and moments listed in X301.2.2(b), and pressure thrust, defined as the product of the effective thrust area of the bellows and the maximum pressure to which the joint will be subjected in operation. Consideration shall be given to the increase of pressure thrust loads on anchors due to unrestrained expansion joints during leak testing if supplemental restraints are not used during the test (see para. 345.3.3). For convoluted, omega, or disk type joints, the effective thrust area recommended by the manufacturer shall be used. If this information is unavailable, the area shall be based on the mean diameter of the bellows.

(b) Intermediate Anchors. Anchors shall be capable of withstanding the following forces and moments:

(1) those required to compress, extend, offset, or rotate the joint by an amount equal to the calculated linear or angular displacement

Copyright © 2015 by the American Society of Mechanical Engineers.
No reproduction may be made of this material without written consent of ASME.

(2) static friction of the pipe in moving on its supports between extreme extended and contracted positions (with calculated movement based on the length of pipe between anchor and expansion joint)

(3) operating and transient dynamic forces caused by the flowing medium

(4) other piping forces and moments

X302 EXPANSION JOINT MANUFACTURER RESPONSIBILITIES

The expansion joint manufacturer shall provide the detailed design and fabrication of all elements of the expansion joint in accordance with the requirements of the Code and the engineering design. This includes

(a) all piping within the end connections of the assembly supplied by the manufacturer, including pipe, flanges, fittings, connections, bellows, and supports or restraints of piping

(b) specifying the need for supports or restraints external to the assembly as required, and of the data for their design

(c) determining design conditions for all components supplied with the expansion joint that are not in contact with the flowing medium

(14) X302.1 Expansion Joint Design

The design of bellows-type expansion joints shall be based on recognized and accepted analysis methods and design conditions stated in para. X301.1. These joints shall be designed so that permanent deformation of the expansion joint and pressure-restraint hardware will not occur during leak testing. Convoluted-type bellows shall be designed in accordance with the EJMA standards, except as otherwise required or permitted herein. Design of other types of bellows shall be qualified as required by para. 304.7.2.

X302.1.1 Factors of Safety. The factor of safety on squirm pressure shall be not less than 2.25. The factor of safety on ultimate rupture pressure shall be not less than 3.0.

X302.1.2 Design Stress Limits. For convoluted type bellows, stresses shall be calculated either by the formulas shown in the EJMA standards or by other methods acceptable to the owner.

(a) The circumferential and meridional membrane stress in the bellows, the tangent end, and reinforcing ring members (including tensile stress in fasteners) due to design pressure shall not exceed the allowable stress values given in Table A-1.

(b) Meridional membrane and bending stresses at design pressure shall be of a magnitude that will not result in permanent deformation of the convolutions at test pressure. Correlation with previous test data may be used to satisfy this requirement.

For an unreinforced bellows, annealed after forming, the meridional membrane plus bending stress in the bellows shall not exceed 1.5 times the allowable stress given in Table A-1.

(c) Stresses shall be calculated in restraints (tie rods, hinge bars, pins, etc.) in self-restrained expansion joints and in the attachments of the restraining devices to the pipe or flanges. Direct tension, compression, bearing, and shear stresses shall not exceed the allowable stress limits stated in para. 302.3.1. The summation of general bending stress plus tension or compression stress shall not exceed the stress values listed in Appendix A, Tables A-1 and A-2, times the shape factor of the cross section. The shape factor is the ratio of the plastic moment to the yield moment (e.g., 1.5 for a rectangular section). For attachment of restraints to piping, see para. 321.3. Local stresses may be evaluated using the criteria of ASME Section VIII, Division 2, Part 5. Compression members shall be evaluated for buckling in accordance with the AISC Manual of Steel Construction, Allowable Stress Design. For self-restrained expansion joints, the restraints shall be designed to withstand the full design pressure thrust. Additional considerations may be required where time-dependent stresses prevail.

(d) Pressure design of pipe sections, fittings, and flanges shall meet the requirements of paras. 303 and 304.

(e) When the operating metal temperature of the bellows element is in the creep range,[1] the design shall be given special consideration and, in addition to meeting the requirements of this Appendix, shall be qualified as required by para. 304.7.2.

X302.1.3 Fatigue Analysis

(a) A fatigue analysis[1] that takes into account all design cyclic conditions shall be performed and the calculated design cycle life shall be reported. The method of analysis for convoluted U-shaped bellows shall be in accordance with EJMA standards.

(b) Material design fatigue curves for as-formed austenitic stainless steel bellows are provided in Fig. X302.1.3. The curves are for use only with the EJMA stress equations. Fatigue testing by individual manufacturers, in accordance with (d) below, is required to qualify use of the pertinent fatigue curve for bellows manufactured by them. Fatigue testing in accordance with (e) below is required to develop fatigue curves for bellows of materials other than as-formed stainless steel. Fatigue test and evaluation procedures are described in (c) below. The allowable stress range for a U-shaped bellows shall be determined by multiplying the total stress range from Fig. X302.1.3 by the product of X_f times X_m, factors determined in accordance with (c), (d), and (e) below.

[1] Consideration shall be given to the detrimental effects of creep-fatigue interaction when the operating metal temperature of the bellows element will be in the creep range. Creep-fatigue interaction may become significant at temperatures above 425°C (800°F) for austenitic stainless steels.

Copyright © 2015 by the American Society of Mechanical Engineers.
No reproduction may be made of this material without written consent of ASME.

Fig. X302.1.3 Design Fatigue Curves for Austenitic Stainless Steel Bellows

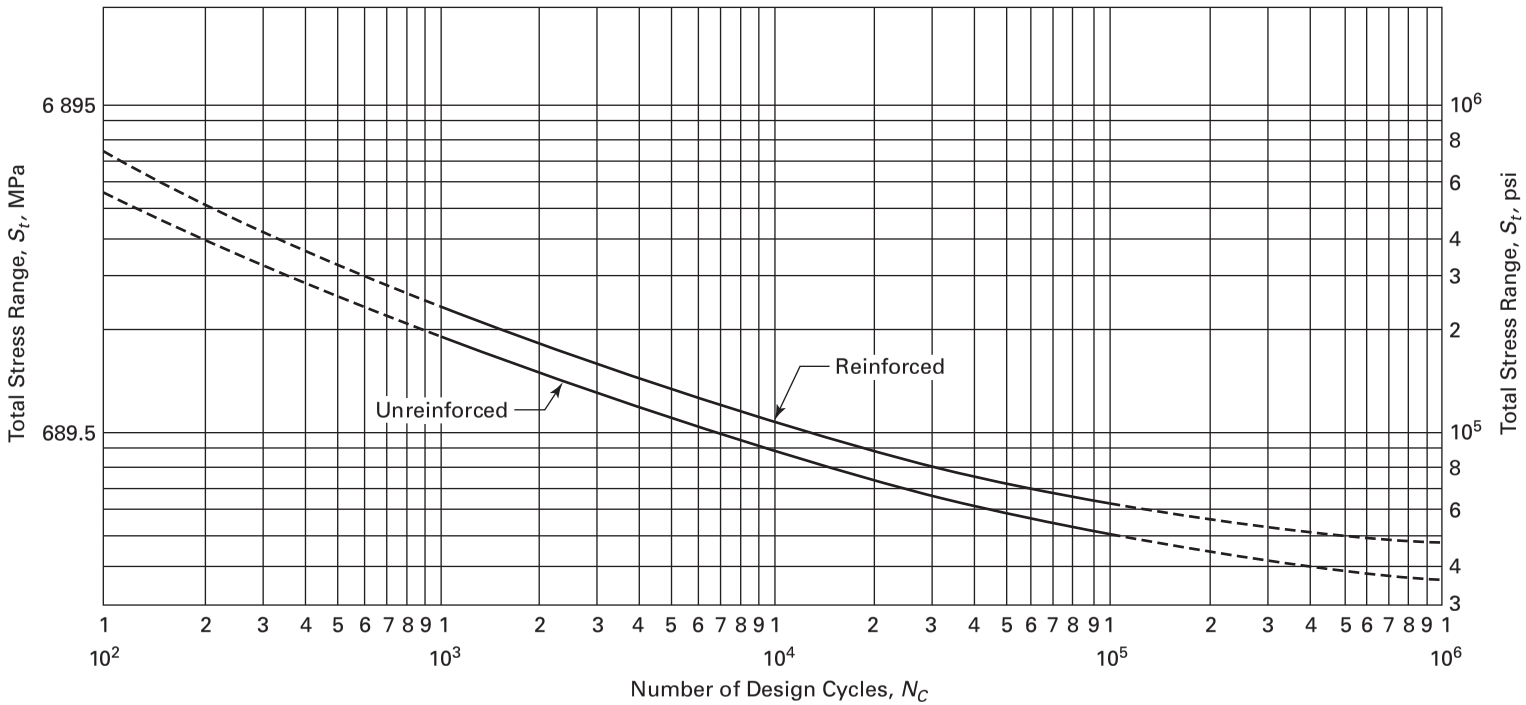

$$N_c = \left(\frac{A}{S_t - B}\right)^2$$

$$S_t = 0.7\,(S_3 + S_4) + S_5 + S_6$$

Bellows	Cycles	A		B	
		MPa	psi	MPa	psi
Unreinforced	≤ 40,000	36 000	5.2×10^6	264	38,300
	> 40,000	46 000	6.7×10^6	211	30,600
Reinforced	≤ 40,000	45 000	6.6×10^6	334	48,500
	> 40,000	59 000	8.5×10^6	268	38,800

GENERAL NOTES:

(a) These curves are intended to evaluate the design fatigue life up to 427°C (800°F) for austenitic stainless steel bellows that have not been heat treated. At higher temperatures, creep effects may become significant and shall be considered. The bellows deflection stress calculations shall be based on the modulus of elasticity at 21°C (70°F).

(b) The equations are of the form provided in "Design of Pressure Vessels for Low Cycle Fatigue" by B. F. Langer, ASME paper 61-WA-18. The constants were modified to reflect actual bellows test data reduced to a design curve in accordance with the rules of the BPV Code, Section VIII, Division 2, Annex 5.F. The calculations of S_5 and S_6 shall be based on a modulus of elasticity equal to 1.95×10^5 MPa (28.3×10^6 psi).

(c) For nomenclature, refer to EJMA standards.

(d) Factors have been included in these design fatigue curves to account for the normal effects of size, surface finish, and scatter of the data. Therefore, the design cycle life should realistically represent the estimated number of operating cycles. An overly conservative estimate of cycles can result in an increased number of convolutions and a joint more prone to instability.

Copyright © 2015 by the American Society of Mechanical Engineers.
No reproduction may be made of this material without written consent of ASME.

(c) Fatigue testing to qualify either a fabrication process or a new material shall be performed in accordance with the following procedure. Test bellows shall have an inside diameter not less than 89 mm (3½ in.) and shall have at least three convolutions. The bellows fatigue test data shall be compared with a reference fatigue curve to develop a fabrication factor, eq. (X1), or material factor, eq. (X2).

$$X_f = R^f_{\min} \tag{X1}$$

$$X_m = K_s R^m_{\min} / X_f \tag{X2}$$

where

K_s = factor (not greater than 1.0) for statistical variation in test results = $1.25/(1.470 - 0.044N_t)$

N_{ct} = number of cycles to failure in bellows fatigue test; failure is defined as development of a crack through thickness

N_t = number of bellows fatigue tests performed to develop the material factor X_m

$R^f_{\min}$ and $R^m_{\min}$ = minimum ratio of test stress range to reference stress range of all bellows tested. (Superscripts *f* and *m* refer to qualification of a fabrication process or a new material, respectively.) This ratio shall be determined for each fatigue test by dividing the test stress range (calculated in accordance with the EJMA stress equations) by the reference stress range. The reference stress range is taken from the lower-bound fatigue curve for the bellows fatigue test data used to develop the design fatigue curves, and for unreinforced bellows is

(SI Units)

$$(58 \times 10^3/\sqrt{N_{ct}}) + 264 \text{ (MPa)}$$

(U.S. Customary Units)

$$(8.4 \times 10^6/\sqrt{N_{ct}}) + 38{,}300 \text{ (psi)}$$

For reinforced bellows it is

(SI Units)

$$(73 \times 10^3/\sqrt{N_{ct}}) + 334 \text{ (MPa)}$$

(U.S. Customary Units)

$$(10.6 \times 10^6/\sqrt{N_{ct}}) + 48{,}500 \text{ (psi)}$$

X_f = factor (not greater than 1.0) representing effect of the manufacturing process on bellows fatigue strength

X_m = factor representing effect of material and its heat treatment on bellows fatigue strength. X_m for as-formed austenitic stainless steel bellows is 1.0. It shall not exceed 1.0 in other cases unless five or more fatigue tests have been performed on bellows fabricated from the same material.

(d) The manufacturer shall qualify the manufacturing process by correlation fatigue testing. A minimum of five tests (each, for reinforced and unreinforced bellows) of austenitic stainless steel bellows in the as-formed condition, manufactured by the organization making the tests, shall be performed. Testing shall consider the effects of all variables necessary to validate the correlation between the fatigue curves, design equations, and finished product, including the following, as applicable: bellows diameter, thickness, convolution profile, manufacturing process, and single versus multi-ply construction. The factor X_f shall be determined from the test data in accordance with (c) above.

(e) The allowable stress range, S_t, for U-shaped bellows, fabricated from material other than as-formed austenitic stainless steel, shall be developed from bellows fatigue test data. A minimum of two bellows fatigue tests, differing in stress range by a factor of at least 2.0, are required to develop a material factor, X_m, in accordance with (c) above. [The factor X_f in eq. (X2) shall be for the bellows tested.] Materials used in the as-formed condition and those heat treated after forming are considered separate materials.

X302.1.4 Limitations

(a) Expansion joint bellows shall not be constructed from lap welded pipe or lap welded tubing.

(b) All pressure containing or pressure thrust restraining materials shall conform to the requirements of Chapter III and Appendix A.

X302.2 Expansion Joint Manufacture

Expansion joints shall be produced in accordance with the manufacturer's specification, which shall include at least the following requirements.

X302.2.1 Fabrication

(a) All welds shall be made by qualified welders or welding operators using welding procedures qualified as required by para. 328.2.

(b) The longitudinal seam weld in the bellows element shall be a full penetration butt weld. Prior to forming, the thickness of the weld shall be not less than 1.00

Copyright © 2015 by the American Society of Mechanical Engineers.
No reproduction may be made of this material without written consent of ASME.

nor more than 1.10 times the thickness of the bellows material.

(c) A full fillet weld may be used as a primary weld to attach a bellows element to an adjoining piping component.

(d) When bellows are attached directly to an adjoining piping component by welding and the piping component is P-Nos. 4, 5A, 5B, or 5C base metal, the attachment weld shall be heat treated in accordance with para. 331.1, except that the exemptions from heat treatment given in para. 331 shall not be permitted. The holding time shall be based on the thickness of the piping component at the bellows attachment weld location. Examination of the attachment welds shall be performed after heat treatment. This heat treatment may affect bellows pressure capacity, mechanical properties, and corrosion resistance. If the required heat treatment is determined to be detrimental to the bellows' performance, the bellows shall not be attached directly to the piping component. In that case, the piping component side of the weld joint shall be buttered in accordance with ASME Section IX, para. QW-283 with appropriate filler metal, heat treated in accordance with Table 333.1.1, and then welded to the bellows.

X302.2.2 Examination. The following are minimum quality control requirements:

(a) Required examinations shall be in accordance with paras. 341 and 344.

(b) The longitudinal seam weld in the bellows tube shall be 100% examined prior to forming, either by radiography or, for material thickness ≤ 2.4 mm ($^3/_{32}$ in.) welded in a single pass, by liquid penetrant examination of both inside and outside surfaces. For the purposes of this Appendix, either examination is acceptable for design with a factor E_j of 1.00 when used within the stated thickness limits.

(c) After forming, a liquid penetrant examination shall be conducted on all accessible surfaces of the weld, inside and outside. Welds attaching the bellows to the piping, etc., shall be 100% liquid penetrant examined.

(d) Acceptance criteria for radiography shall be in accordance with Table 341.3.2. Acceptance criteria for liquid penetrant examination shall be that cracks, undercutting, and incomplete penetration are not permitted.

X302.2.3 Leak Test

(a) Each expansion joint shall receive a hydrostatic, pneumatic, or combination hydrostatic–pneumatic shop pressure test by the manufacturer in accordance with para. 345, except that the test pressure shall be the lesser of that calculated by eq. (24) (para. 345.4.2) or eq. (X3), but not less than 1.5 times the design pressure. R_r in eq. (24) shall be based on the bellows material. When the bellows' design temperature is equal to or greater than T_{cr} as defined in Table 302.3.5, General Note (b), R_r in eq. (24) shall be replaced by S_{yT}/S_{yt}, where S_{yT} is the yield strength at the test temperature and S_{yt} is the yield strength at the bellows' design temperature. Yield strength values shall be determined in accordance with para. 302.3.2(f), with the bellows material treated as an unlisted material. The test pressure shall be maintained for not less than 10 min.

$$P_T = 1.5 P_S E_t / E \qquad \text{(X3)}$$

where

E = modulus of elasticity at design temperature
E_t = modulus of elasticity at test temperature
P_S = limiting design pressure based on column instability (for convoluted U-shaped bellows, see C-4.2.1 and C-4.2.2 of the EJMA standards)
P_T = minimum test gage pressure

(b) Expansion joints designed to resist the pressure thrust shall not be provided with any additional axial restraint during the leak test. Moment restraint simulating piping rigidity may be applied if necessary.

(c) In addition to examination for leaks and general structural integrity during the pressure test, the expansion joint shall be examined before, during, and after the test to confirm that no unacceptable squirm has occurred. Squirm shall be considered to have occurred if under the internal test pressure an initially symmetrical bellows deforms, resulting in lack of parallelism or uneven spacing of convolutions. Such deformation shall be considered unacceptable when the maximum ratio of bellows pitch under pressure to the pitch before applying pressure exceeds 1.15 for unreinforced bellows or 1.20 for reinforced bellows. Examination for leakage and deformation shall be performed at a pressure not less than two-thirds of the test pressure, after full test pressure has been applied.

(d) Examination for squirm shall be performed at full test pressure. For safety purposes, this may be accomplished by remote viewing (e.g., by optical magnification or video recording) of the changes in convolution spacing with respect to a temporarily mounted dimensional reference. Examination for leakage shall be performed at a pressure not less than two-thirds of test pressure, after application of full test pressure. For a pneumatic test, the precautions of para. 345.5.1 shall be observed.

Copyright © 2015 by the American Society of Mechanical Engineers.
No reproduction may be made of this material without written consent of ASME.

APPENDIX Z
PREPARATION OF TECHNICAL INQUIRIES

Z300 INTRODUCTION

The ASME B31 Committee, Code for Pressure Piping, will consider written requests for interpretations and revisions of the Code rules, and develop new rules if dictated by technological development. The Committee's activities in this regard are limited strictly to interpretations of the rules or to the consideration of revisions to the present rules on the basis of new data or technology. As a matter of published policy, ASME does not approve, certify, rate, or endorse any item, construction, proprietary device, or activity, and, accordingly, inquiries requiring such consideration will be returned. Moreover, ASME does not act as a consultant on specific engineering problems or on the general application or understanding of the Code rules. If, based on the inquiry information submitted, it is the opinion of the Committee that the inquirer should seek professional assistance, the inquiry will be returned with the recommendation that such assistance be obtained.

An inquiry that does not provide the information needed for the Committee's full understanding will be returned.

The Introduction states that "it is the owner's responsibility to select the Code Section" for a piping installation. An inquiry requesting such a decision will be returned.

Z301 REQUIREMENTS

Inquiries shall be limited strictly to interpretations of the rules or to the consideration of revisions to the present rules on the basis of new data or technology. Inquiries shall meet the following requirements:

(a) Scope. Involve a single rule or closely related rules in the scope of the Code. An inquiry letter concerning unrelated subjects will be returned.

(b) Background. State the purpose of the inquiry, which may be either to obtain an interpretation of Code rules, or to propose consideration of a revision to the present rules. Provide concisely the information needed for the Committee's understanding of the inquiry, being sure to include reference to the applicable Code Section, Edition, Addenda, paragraphs, figures, and tables. If sketches are provided, they shall be limited to the scope of the inquiry.

(c) Inquiry Structure

(1) Proposed Question(s). The inquiry shall be stated in a condensed and precise question format, omitting superfluous background information, and, where appropriate, composed in such a way that "yes" or "no" (perhaps with provisos) would be an acceptable reply. The inquiry statement should be technically and editorially correct.

(2) Proposed Reply(ies). Provide a proposed reply stating what it is believed that the Code requires.

If in the inquirer's opinion, a revision to the Code is needed, recommended wording shall be provided in addition to information justifying the change.

Z302 SUBMITTAL

Inquiries should be submitted in typewritten form; however, legible handwritten inquiries will be considered. They shall include the name and mailing address of the inquirer, and be mailed to the following address:

Secretary
ASME B31 Committee
Two Park Avenue
New York, NY 10016-5990
E-mail: customercare@asme.org

Copyright © 2015 by the American Society of Mechanical Engineers.
No reproduction may be made of this material without written consent of ASME.

INTENTIONALLY LEFT BLANK

Copyright © 2015 by the American Society of Mechanical Engineers.
No reproduction may be made of this material without written consent of ASME.

INDEX[1]

Abbreviations, nonmetals, A326.3 (*see also* symbols)
Acceptance criteria, Tables 302.3.3C and D, 323.3.5, Table 323.3.5, 341.3.2, Table 341.3.2, 341.3.3, 341.4, 341.5, 344.6.2, A328.2.1, A341.3, Table A341.3.2, A341.4.1, K302.3.3, K323.3.5, Table K323.3.5, K341.3, Table K341.3.2
Acidic materials, effects of, F323.4
Adhesive joints (*see also* solvent cemented)
  definition (*see* bonded joint)
  in metallic piping, M318.2, K318.2
  in nonmetallic piping, A328.5.6, MA311.2
Air condensation, 301.11
Alignment, 328.4.2, 328.4.3, Fig. 328.4.3, 335.1.1, 341.4.1, 341.4.3, M335.1.1, K328.4.3
Allowable pressures, nonmetals, Tables B-4 and B-5
Allowable stress
  definition, 300.2
  values, Table K-1
Allowable stress amplitude, K302.3.1, K304.8.3
Allowable stress bases, 302.3, A302.3, M302.3, K302.3
  metallic materials, 302.3.2, M302.3.2, K302.3.2
  nonmetallic materials, A302.3.2
Allowable stress range, 302.3.5, 319.1, 319.3.4, K302.3.5, K319.1
Allowable stress values for
  bolting, Table A-2
  clad metals, linings, 323.4.3, K323.4.3
  metals, Tables A-1 and K-1
  supports, 321.1.3
  testing, 302.3.6, 345.2.1, A302.3.4, K302.3.6
  thermoplastics, Table B-1
Allowances
  corrosion, erosion, 302.4, 304.1.1, A304.1.1, M302.4, MA302.4, K302.4, K304.1.1
  for pressure–temperature variations, 302.2.4, A302.2.4, M302.2.4, K302.2.4, App. V
  grooving, threading, 302.4, K302.4
  mechanical strength, 302.4.1
Alternating stress, K304.8.2, K304.8.3
Alternative leak test, 345.1, 345.9, K345.1
Aluminum and aluminum alloys
  allowable stresses, 319.3.4, Tables A-1 and A-2
  effects, F323.4
  flanges, specification, App. L
  fluid service requirements, 323.4.2
  precautions, F323.4
  quality factors, Tables A-1A and A-1B
  welding, 323.4.2, Notes for App. A
Ambient effects, 301.4, F301.4
Analysis
  fatigue (*see* fatigue analysis)
  flexibility, 319.4, 321.1.2, A319.4, M319.4, K319
  product, K323.1.5
  properties for, 319.3, A319.3
  support, 321.1.2, K321
Anchors, 319.7, 321.2.1, A319.7
Antimony, effects of, F323.4
A-Numbers, Tables 330.1.1 and 331.1.1
Appendices (*see* Contents)
  status of, 300(f), 300.4
Application of Code, Introduction
Assembly, 300.2, 335, A335, M335, K335
Atmospheric icing, 301.4.3
Attachments, 321.1.4, 321.3, K321 (*see also* supports)

Backing filler material (*see* consumable insert)
Backing material, 300.2, 328.3.2, 328.4.2, M311.2, M328.3.2, K311.2.3, K328.3.2, K328.4.2
Base material, def., 300.2
Bases for allowable stresses (*see* allowable stress bases)
Basic allowable stress
  definition, 300.2
  values, Table A-1
Bearing
  allowable stress, 302.3.1, K302.3.1
  test, A302.3.3
Bell type joints (*see also* caulked joints *and* packed joints)
  assembly, 335.5, A335.5
  fluid service requirements, 316, 318.1, A318, M318
Bellows expansion joints, 345.3.3, 345.4.2, F304.7.4, K304.7.4, App. X
Bending, 332.2, A332.2, M332, MA332, K332.2
Bending moments, 319.4.4
Bending temperature, 332.2.2
Bends
  corrugated, 306.2.2, 332.2.3, A306.2.2, M332, K306.2.3, K332.2.2, App. D
  fabrication, 332.2, A332.2, K332.2
  flattening, 332.2.1, K332.2.1
  fluid service requirements, 306.2, A306.2, M306.2, K306.2
  miter, 300.2, 304.2.3, 306.3, A304.2.3, A306.3, M306.3, MA306.3, K304.2.3, K306.3
  pipe, 304.2.1, 306.2, 332.2, A304.2.1, A306.2, M306.2, M332, MA306.2, K304.2.1, K306.2, K332.2
  pressure design, 304.2.1, 304.2.4, A304.2.1, K304.2.1
Bimetallic piping, 301.7.3, 323.4.3, K323.4.3

[1] General Notes follow at end of this Index.

Copyright © 2015 by the American Society of Mechanical Engineers.
No reproduction may be made of this material without written consent of ASME.

Bismuth, effects of, F323.4
Blanks, 304.5.3, 308.1, M308.5, K308.5
Blind flanges, 304.5.2, A304.5.2, K304.5.2
Boiler piping, 300.1.3, Fig. 300.1.1
Bolt design stress basis, 302.3.2, M302.3, K302.3.2
Bolt design stress values, Table A-2
Bolted joints
  assembly, 335.2, A335.2, K335.2
  design, 304.5.1, 308.4, 309.2, 312, K302.3, K309, F309, F312
  fluid service requirements, 309, 312, A312, K304.5, K309, K312
Bolting, bolts, 309, Table 326.1, K309, Tables K323.3.1 and K326.1, F309.1
  procedure, 309.2.3, F309, F312
  sequence, 309.2.3, A335.2.5
  torque, 309.2.3, 312.1, 312.2, 335.2.2, A335.2.4, A335.8.1
Bond, seal, 335.3.2, A311.2.4, A328.6
Bonded joints
  acceptance criteria, Table A341.3.2
  definition, 300.2
  fabrication, A328
  fluid service requirements, A311, MA311.2
  materials, A328.2.1, A328.3.1, A328.5.3, A328.5.6, A328.7
  procedures, A328.1, A328.2, A328.5
  qualification, A328.2
  records, A328.2.4
  repair of defects, A328.6, A341.3.3
  requalification, A328.2.6
  responsibility, A328.1
Bonder, def., 300.2
Borosilicate glass, 323.4.2, A334.1, A335.8.1, Table B-5, FA323.4
Bowing (of piping), 301.7.2, F301.7
Brackets, support, 321.3.2
Branch connection fittings
  application, 304.3.1, K304.3.1
  definition, 300.2
  limitations, 304.3.2, 304.3.3, 328.5.4, K306.1.2, K328.5.4
Branch connections (*see also* branch connection fitting, extruded outlets)
  acceptance criteria, Tables 341.3.2 and K341.3.2
  considerations, 304.3.5, A304.3.3
  design, 304.2.4, 304.3, A304.3, K304.3
  fabrication, 328.4.3, Fig. 328.4.4, 328.5.4, Fig. 328.5.4, A328.5.2, A328.5.3, A328.5.4, A328.5.5, Fig. A328.5.5, A328.5.6, A328.5.7, K328.5.4, Fig. K328.5.4
  fluid service requirements, 306.5, A306.5, M306.5, MA306.5, K306.5
  reinforcement, 304.3.3, 304.3.4, 328.5.4, Fig. 328.5.4, 331.1.3, A328.5.3, A328.5.6, K328.5.4, App. H
  small, 302.4.1, 304.3.5, 322.3.2
  strength, 304.3.2, A304.3.2, M304.3.2, K304.3.2
Branch connections (*see also* branch connection fitting, extruded outlets) (Cont'd)
  welded, 304.3.3, 328.5.4, Fig. 328.5.4, K328.5.4, Fig. K328.5.4, App. H
Branches (*see* branch connection fittings; branch connections; *and* extruded outlets)
Brazed joints
  fabrication, 333, M333, K333
  limitations, 317.2, M317, K317.2
  materials, 325, 333.2
Braze welding, 300.2, 317.2, 333, M317, M333, K317.2
Brazing, 300.2, 317.2, 333, M317, M333, K317.2, K333
Brittle piping (*see also* ductility)
  assembly, A335.8
  supports, A321.5.2
Butt-and-wrapped joint
  definition (*see* bonded joint)
  bonding, A328.5.7
Butt joint, def., 300.2
Butt weld
  acceptance criteria, 341.3.2, Table 341.3.2, Fig. 341.3.2, 341.3.3, K341.3.2, Table K341.3.2
  fluid service requirements, 311.2, A318.3.1, M311, K311.2
  girth, 311, 328.5, M311, M328, K311, K328.5
  longitudinal, 302.3.4, 328.4.3, 328.5, K302.3.4, K328.4.3, K328.5
  preparation, 328.4, Fig. 328.4.2, K328.4, Fig. K328.4.3
  repair, 328.6, K328.6
  requirements, 328, A329.1, K328
  standard for, Table 326.1

Cadmium, effect, F323.4
Calculated stress limits, 302.3.5, 302.3.6, A302.3.5, A302.3.6, K302.3.5, K302.3.6
Calculations, branch reinf., App. H
Carbon steel (*see* steel, other than stainless)
Casting quality factor E_c, 302.3.3, Tables 302.3.3C and 302.3.3D, K302.3.3, Table A-1A
Cast iron
  allowable stresses, 302.3.2, Table A-1
  flanges, bolting for, 309.2.3
  fluid service requirements, 323.4.2, M323.4.2, K323.4.2, F323.4
  quality factor E_c, Table A-1A
  standards, Table 326.1
  supports, 321.1.4
Categories, fluid service, 300(b), 300.2, App. M
Category D Fluid Service
  definition, 300.2, App. M
  requirements for, 300(d), 305.2.1, 305.2.2, 306.3.2, 307.2, 311.2.1, 314.1, 314.2.1, 316, 317.1, Table 341.3.2, 341.4.2, 345.1, 345.7, A311.2.3, A323.4.2, A341.4.2, A345.7

Copyright © 2015 by the American Society of Mechanical Engineers.
No reproduction may be made of this material without written consent of ASME.

Category M Fluid Service
definition, 300.2, App. M
piping for, 300(d), Ch. VIII, K300.1.4
Caulked joints, 300.2, 316, 335.5, A335.5, M316, M335.5, K316 (*see also* bell type joints *and* packed joints)
Cautions, Introduction (*see* precautions)
Cemented joints (*see* adhesive joints; solvent cemented joints)
Cements, 325, A328.2.1, A328.3.1, A328.5.3, F323.1
Charpy impact test, 323.3, K323.3
Chemical plant, def., 300.2
Chemicals piping coverage, 300.1.1
Clad materials, 323.4.3, K323.4.3
Clamps, support, 321.2.2, 321.3.1
Classifying fluid services, App. M
Cleaning, 328.4.1, A328.4, F335.9
Clips, support, 321.3.2
Closures, 304.4, A304.4, M304.4, K304.4
Code
application, Introduction
cases, Introduction
coverage, 300.1.1, Fig. 300.1.1
description, 300(a)
exclusions, 300.1.3
inquiries, Introduction, App. Z
intent of, Introduction, 300(c)
interpretation, Introduction, App. Z
scope, 300.1
service requirements, 300(d)
Coefficient of expansion (*see* thermal expansion)
Cold spring, 319.2.4, 335.1.1, 341.4.3, A319.2.3
Combined leak test, 345.6
Components
criteria for design, 302.2, A302.2, K302.2
definition, 300.2
dimensions (standards), 326, A326, M326, K326
fluid service requirements, 300(d), Ch. II, Part 3, A306, A308, M305–M308, MA306, MA308, K306–K309
listed, 302.2.1, 302.2.2, 304.7.1, 305.1, 306.1.1, 307.1.1, 308.1.1, 309.1.1, 326.1.1, 326.2.1, Table 326.1, A302.2.2, A304.7.1, A306.1.1, M326.1.1, Table A326.1, K302.2.1, K302.2.2, K304.7.1, K306.1.1, K307.1.1, K326, Table K326.1, App. E
metallic–nonmetallic, 304.7.3, A304.7.3
pressure design, 304, A304, M304, K304
ratings (standards), 326, A326, M326, K326
standards, 326, A326, M326
tabular listing, Tables 326.1, A326.1, and K326.1
unlisted, 302.2.3, 304.7.2, 326.1.2, 326.2.2, A304.7.2, M326.1.2, K302.2.3, K304.7.2
Compounds
sealing, 325, M325
thread, 314.1, 325, 335.3.1, 335.3.2
Compression joints, tubing, 315, 335.4.2, M335.4.2, K315
Computed stress range, 319.1, 319.4.4
Concentric reducers, 304.6, A304.6, K304.6
Concrete pipe, Table B-4
Condensation, air, 301.11
atmospheric (moisture), 301.4.3
Conditions, design (*see* design conditions)
Connections
branch (*see* branch connection fittings; *and* branch connections)
hose, Table 326.1
instrument, 322.3.2, K322.3.2
structural (support), 321.4
Connections for piping, 300.1.3, 300.2
Constant-support hangers, 321.2.3
Consumable inserts, 300.2, 311.2.3, 328.3.3, 328.4.2, M328.3.2, K311.2.3, K328.4.2 (*see also* backing material)
Continuity
electrical, A335.2.5
of lining, A329.1.2
Contraction, thermal (*see* expansion)
Control piping, 322.3, A322.3, M322.3, K322.3
Cooling of fluid, effects, 301.4.1
Copper and copper alloys, 319.3.4, Tables A-1, A-1A, A-1B, and A-2
effects, F323.4
Corrosion
allowance, 302.4, 304.1.1, A304.1.1, K304.1.1
in service, 323.5
Counterweight supports, 321.2.4
Coupling, straight thread, 314.2.1
Criteria, acceptance (*see* acceptance criteria)
Criteria, design (*see* design criteria)
Criteria, impact test, 323.3.5, K323.3.5
Cross-country pipelines, 300.1.3, Fig. 300.1.1
Crushing (*see* bearing test)
Curved pipe (*see also* bends, elbows)
external pressure, 304.2.4, K304.2.4
Cyanides, effects of, F323.4
Cyclic effects (loads), 301.10
Cyclic service, 302.3.5, K302.3.5, K304.8.1 (*see also* severe cyclic conditions)

Damaging to human tissue, def., 300.2
Dead load, 301.6.2, 304.3.5, 321.1
Defects, Table 302.3.3C, 328.6, 341.3.3, 341.3.4, A328.7, A334.2, A341.3.3, K323.1.4, K328.6, K341.3.3
Definitions (alphabetically listed), 300.2
nomenclature, App. J
Deformation, stress limits, 302.3.2
Delayed heat treatment, 331.2.4
Design
allowances, 302.2.4, 302.4, A302.2.4, A302.4, M302.2.4, K302.2.4, K302.4, App. V

Copyright © 2015 by the American Society of Mechanical Engineers.
No reproduction may be made of this material without written consent of ASME.

Design (Cont'd)
conditions, 301, A301, M301, K301, F301
criteria, 302, A302, M302, MA302, K302
minimum temperature, 301.3.1, 323.2.2, A301.3.1, M323.2, K323.2.2
of (specific) systems, 322, A322, M322, K322
philosophy, Introduction, 300(c)
pressure, 301.2, 322.6.3, M301.2
requirements, 300(c), 300.1.1 (*see also* designer responsibilities; engineering design; *and other specific terms*)
stresses, bolting, 302.3.2, M302.3, K302.3.2
stress values, Table A-2
stresses, metals (*see* stresses, allowable)
stresses, nonmetals, A302.3, App. B
supports, 321, A321, K321
temperature, 301.3, A301.3, M301.3, K301
Designer
approval by definition, 331.2.1, M323.1.4
definition, 300.2
responsibilities, 300(b), 300(c), 302.2.3, 319.5, 323.2.1, 323.2.4, 331.2.1, 331.2.2, 345.5.1, A302.1, M323.1.4, K300(b), K302.2.3
Deterioration in service, 323.5, M323.5
Device, pressure relieving, 301.2.2, 322.6, K322.6.3
Differential thermal expansion, 301.7.3, 313
Dimensional standards, 326, A326, M326
tables, Tables 326.1, A326.1, and K326.1
Discharge piping, 301.5.5, 322.6.2, G300.2
Discontinuities, 344.6, K302.3.3, Table K302.3.3D (*see also* acceptance criteria, indications)
Displacement
strains, 319.2.1, 319.2.3, 321.1, A319.2.1
stresses, 319.2.2, A319.2.2
stress range, 302.3.5, 319.2.3, 319.4.4, K302.3.5
Dissimilar metals, 330.2.3, 331.2.3
Ductile iron
allowable stresses, Table A-1
fluid service requirements, 323.4.2, M323.4.2, K323.4.2
quality factor, E_c, Table A-1A
standards, Table 326.1
supports, 321.1.4
Ductility
reduced, 301.9
requirements (*see* toughness requirements)
Dynamic effects (loads), 301.5, M301.5, F301.5

Earthquake loads, 301.5.3, 302.3.6, A302.3.4, K302.3.6
Eccentric reducer, 304.6.2, A304.6, K304.6
Eddy current examination, Table K305.1.2, K344.8
Elastic modulus, 319.3.2, 319.4.4, 319.5.1, A319.3.2, App. C, App. D
Elastomeric seals, A318.4, A335.6.3
Elbows, 304.2.2, 319.4.4, A304.2.2, K304.2.2 (*see also* fittings)
Electrical continuity, A335.2.6
Electrofusion, A328.5.5
Elements, piping, def., 300.2
Elongated indications, Tables 341.3.2, K341.3.2
End preparation (*see* welding preparation)
Engineered safeguards, M300(d), App. G
Engineering design, 300(b), 300(c), M300(e), K321
definition, 300.2
Engineering requirements, 300(c)
Equipment connections (*see* connections for piping)
Equipment excluded, 300.1.3, Fig. 300.1.1
Equipment, packaged, 300.1.2, 300.2
Erection, 300.2, 335, A335, M335
Erector responsibilities, 300(b), 341.2
Erosion allowances, 302.4
Examination
definition, 341.1
personnel, 342
procedures, 343
Examination methods, 344
eddy current, Table K305.1.2, K344.8
in-process, 341.4.1, 341.4.3, 344.7, M341.4.1, K341.4.1
liquid penetrant, Table 302.3.3C, 341.4.3, 344.4, 345.9.1, K302.3.3, K344.4
magnetic particle, Table 302.3.3C, 341.4.3, 344.3, 345.9.1, K302.3.3, K344.3
qualification, 342.1, 343
radiographic, Tables 302.3.3C and 302.3.4, 341.4.1, 341.4.3, 341.5.1, 344.5, 345.9.1, K302.3.3, Table K302.3.3D, K341.3.2, K341.4.1, K344.5
supplementary, 341.5
ultrasonic, Table 302.3.3C, 341.4.1, 341.4.3, 344.6, K302.3.3, K341.3.2, K341.4.1, K344.6
visual, 302.3.3, 341.4, 344.2, 344.7.2, 345.2.2, K341.4.1
Examination, progressive (*see* progressive examination)
Examination required, 302.3.3, 302.3.4, 323.4.3, 341.3, Table 341.3.2, 341.4, 345.2.2, M341.4, K302.3.3, K302.3.4, K323.4.3, K341.3, K341.4
alternative leak test, 345.1, 345.9.1, K345.9
branch connection, 341.3.1
castings, 302.3.3, Tables 302.3.3C and 302.3.3D, K302.3.3, Table K302.3.3D
Category D Fluid Service, Table 341.3.2, 341.4.2, A341.4.2
Category M Fluid Service, M341.4
clad or lined pipe, 323.4.3, K323.4.3
High Pressure Fluid Service, Table K341.3.2, K341.4
longitudinal welds, 302.3.4, Table 302.3.4, Table 341.3.2, 341.4.1, 341.5.1, K302.3.4, Table K341.3.2
Normal Fluid Service, Table 341.3.2, 341.4.1
pneumatic test, 341.4.1, 345.2.2, 345.5
progressive, 341.3.4, 341.5.1
severe cyclic conditions, Table 341.3.2, 341.4.3
visual (*see* visual examination)

Copyright © 2015 by the American Society of Mechanical Engineers.
No reproduction may be made of this material without written consent of ASME.

Examination requirements, 341.3, A341.3, K341.3 (*see also* examination required)
Examiner qualifications, 342.1
Excluded piping, 300.1.3, Fig. 300.1.1
Excursion, definition, V300.1
Expanded joints, 313, M313, MA313, K313
Expansion, thermal
  data, 319.3.1, A319.3.1, App. C
  design for, 301.7, 304.3.5, 319, A319
  differences, 301.7.3
  effects, 301.7, 304.7.2, 313, 315.1, A304.7.2, K304.7.2, F301.7
  fluid, 301.4.2
  piping, 301.7, 319, A319, M319
Expansion joints, 304.7.4, 319.7, 321.2.1, 345.3.3, A319.7, F304.7.4
  bellows type, 345.3.3, 345.4.2, K304.7.2, K304.7.4, App. X
Experimental stress analysis, 304.7.2
Extended fatigue life, K304.8.6
External pressure
  design, 302.3.5, 304.1.3, 304.2.4, 304.3.3(b), A302.3.3, A304.1.3, A304.3.2, K302.3.5, K304.1.3, K304.2.4
  test, 345.2.4, 345.2.5
Extruded outlets, 304.3.1, 304.3.4, Fig. 304.3.4, K304.3.1

Fabricated branches
  fluid service requirements, 306.5, A306.5, K306.5
  pressure design, 304.3, A304.3, M304.3, K304.3
Fabricated laps, 306.4.1, 306.4.3, 328.5.5, A306.4, M306.4, K306.4, K328.5.5
Fabrication, 300.2, 323.4.3, 327–333, A328–A334, M328–M333, K323.4.3, K328–K333
Fabricator responsibilities, 300(b), Table 323.2.2, 327–333, 341, A328–A334, A341, M328–M333, M341, K328–K333, K341
Facing, flange (*see* flange facing)
Factor of safety, X302.1.1
Factors
  casting E_c (*see* references in App. J)
  flexibility h, 319.3.6, App. D
  stress intensification i, 319.3.6, 319.4.4, App. D
  stress range reduction f, 302.3.5
  weld joint E_j (*see* references in App. J)
Fatigue, 301.10, 319.1.1, K302.3.1, K304.7.2, K304.8, 323.1.4, X301.1.2, Fig. X302.1.3
Fatigue analysis, K304.8, K319, X302.1.3
Fatigue life, K304.7.2, K323.1.4
  extended, K304.8.6
Filler material, 300.2, Table 323.3.1, 328.3.1, 333.2.1, A328.3.1, Table K323.3.1, K328.3.1
Fillet weld, 300.2, 311.2.5, 328.5.2, Figs. 328.5.2, 328.5.4, and 328.5.5, 331.1.3, Table 341.3.2, K311.2.5, K328.5.2, Tables K341.3.2 and D300, App. H
Fire protection piping, 300.1.3
Fired heater (*see* heater piping)
Fittings (*see also* branch connection fittings)
  definition (*see* components)
  fluid service requirements, 306, A306, M306, MA306, K306
Fixtures, support, 321.2
  definition (*see* pipe-supporting elements)
Flammable, def., 300.2 (*see also* hazardous)
Flanged joints (*see also* bolted joints)
  assembly, 302.3.2, 312, 335.2, A335.2, K312, K335.2, F312
  bolting (*see* bolting, bolts)
  fluid service requirements, 312, A312, K312
  gaskets (*see* gaskets)
Flange facing, 308.3, A308.2.1, K308.4, F308.4
Flanges
  aluminum, specification, App. L
  blind, 304.5.2, A304.5.2, K304.5.2
  expanded joint, 308.2.2, M308.2, K308.2.2
  facing, 308.3, A308.2.1, M308.2, K308.4, F308.4
  flat-faced, 309.2.3, 312.2, F308.4 (*see also* full-face gaskets)
  fluid service requirements, 308, A308.2, M308, MA308.2, K308
  for severe cyclic conditions, 308.2.4
  pressure design, 304.5, A304.5, A312, K304.5, F312
  slip-on, 308.2.1, 311.2.5, 328.5.2, Fig. 328.5.2, Table 308.2.1, Table 341.3.2, M308.2, K308.2, F308.2
  tapped holes, 309.3, A309.3
  threaded, 308.2.3, M308.2, K308.2.1
  welding neck, 308.2.4
Flared laps, 306.4.2, 306.4.3, 308.2.5, 332.1, 323.3, A306.4.2, M306.4, K306.4, K308.2.2
Flared tube joints, 315, 335.4.1, A335.4.1, M335.4.1, K315
Flareless tube joints, 315, 335.4.2, M335.4.2, K315
Flashing of fluids, 301.5.1, F301.5
Flexibility, 319, A319, M319, K319
  analysis, 319.4, 321.1.2, 345.9.2, A319.4, M319.4, K319
  characteristic h, Table D300
  factor k, 319.3.6, Table D300
  increased, 319.7, A319.7
  stresses, 319.4.4
Flexible joints, 319.7, A319.7
Fluidized solids coverage, 300.1.1
Fluids
  cooling of, effects, 301.4.1
  flashing, 301.5.1, F301.5
  geysering, 301.5.1, F301.5
  instability, 300(c), F323(a)
  reactivity, F323(a)
  slugging, 301.5.1
  thermal expansion of, 301.2.2, 301.4.2
  two-phase flow of, 301.5.1, 301.7.2, F301.7

Copyright © 2015 by the American Society of Mechanical Engineers.
No reproduction may be made of this material without written consent of ASME.

Fluid service
categories, 300(d), 300.2, App. M
definitions, 300.2
guide to classifying, App. M
precautions, materials, F323, FA323.4
requirements, 305–318, 323.4, A305–A318, A323.4, M305–M318, M323.4, MA305–MA318, MA323.4, K305–K318, K323.4
Forged fittings, 306.1, M306.1, K306.1
Forged laps, 306.1, 306.4, M306.1, K306.1, K306.4
Forming, 332.1, 332.3, K332.3
Full-face gaskets, 304.5.1, 309.2.3, 312.2, A304.5.1, F308.4

Gallium, effects, F323.4
Gas piping coverage
in-plant, 300.1.1
transmission lines, 300.1.3, Fig. 300.1.1
Gaskets, 308.1, 308.4, 325, 335.2.4, A308.4, K308.1, K308.4, F308.4, F312
full-face (*see* full-face gaskets)
Geysering of fluids, 301.5.1, F301.5
Girth weld
fluid service requirements, 311, M311, K311
imperfections, 341.3.2, Fig. 341.3.2, Table 341.3.2, K341.3.2, Table K341.3.2
Gland type joint, 318, 335.6, M318, K318
Glass, borosilicate, A321.5.3, A323.4.2, A334.1, A335.8.1
Governmental jurisdiction, Introduction
Gradients, temperature, 301.7.2, F301.7
Grooving allowance, 302.4, K302.4
Guide to classifying fluid services, App. M
Guides (support), 321.2.1

Hand lay-up (*see* butt-and-wrapped)
Hangers, pipe (*see* supports)
Hardness
air hardening, 331.1.3, K331.1.3
requirements, 331.1.7, Table 331.1.1, K331.1.3
testing, 331.1.7, 341.5.2
Hazard (to personnel), App. G
Hazardous properties of fluids [*see* 300(c), Category D, Category M, damaging to human tissue, flammable, fluid service, instability of fluids; *see* G301.1; *see also* fluid service requirements for specific piping elements]
Header, 304.3.4, 319.4.4, App. H (*see also* run)
extruded outlet, 304.3.4
Heat-affected zone, 300.2, Tables 323.2.2 and 323.3.1, 331.1.7, Table K323.3.1
Heater piping, 300.1.3, Fig. 300.1.1
Heat fusion joint, A328.5.4
Heat treatment, 300.2, Tables 323.2.2 and 323.3.1, 323.3.5, 328.2.1, 331, Table 331.1.1, M331, K331
for bending and forming, 332.4, K332.4
for welding-end valves, 328.5.1
local (*see* local heat treatment)
High pressure piping, 300(e), Ch. IX
scope and applicability, K300
High silicon iron, 323.4.2, F323.4
Holes, tapped, 309.3, A309.3
Hose connection (standard), Table 326.1
Hot gas welded joint, A328.5.2
Hydraulic
impact (shock) (*see* shock, hydraulic)
support, 321.2.5
Hydrogen, effects, F323.4
Hydrostatic design stress
definition, A302.3
values, Table B-1
Hydrostatic leak test, 345.1, 345.4, A345.4, K345.1, K345.4
Hydrostatic–pneumatic leak test, 345.6, K345.6

Ice loads, 301.6.1, 321.1
Icing, atmospheric, 301.4.3
Identification, bond, weld, 328.5.1, A328.5.1
Impact (*see also* toughness)
acceptance criteria, 323.3.5, Table 323.3.5, K323.3.5, Table K323.3.5
forces or loads, 301.5.1, 315.1, 321.1, A302.1, A304.7.2, A323.4.1, M301.5.1, K304.7.2
hydraulic, 301.5.1
testing, metals, Table 323.2.2, 323.3, Table 323.3.1, K323.3, Table K323.3.1
Imperfections, 341.3.3, Fig. 341.3.2, K341.3.3 (*see also* acceptance criteria, indications)
illustrations, Figs. 328.4.3, 328.4.4, and 341.3.2
Increasing flexibility, 319.7, A319.7
Indications, 300.2, Tables 341.3.2 and K341.3.2
Initial service leak test, 345.7, M345, K345.1
In-process examination, 341.4.1, 341.4.3, 344.7, M341.4, K341.4.2
Inquiries, Introduction, App. Z
Inserts, consumable, 300.2, 311.2.3, 328.2.1, 328.3.3, Fig. 328.3.2, 328.4.2, M328.3.2, K311.2.1, K328.4.2
Inspection, 300.2, 340
Inspector
approval by, 304.7.2, 328.2.2, 328.2.3, 341.4.1, 341.4.3, A328.2.2, A328.2.3, M341.4.1
certification by, 341.4.1, 345.2.7
definition, 340.4
qualifications, 340.4
responsibilities, 300(b), 328.2.2, 328.2.3, 340.2
rights, 340.3
Instability of fluids, 300(c), F323(a)
Instrument piping, 322.3, A322.3, M322.3, K322.3
components, def., 300.2
Insulated piping, 301.3.3, 301.3.4
Insulation loads, 301.6.2
Intensification factors, 319.3.6, 319.4.4, App. D
Intent of Code, Introduction, 300(c)
Intermediate alloy steel (*see* steel, other than stainless)

Copyright © 2015 by the American Society of Mechanical Engineers.
No reproduction may be made of this material without written consent of ASME.

Internal insulation, 301.3.4
Internal pressure
design, 302.3.5, 303, 304, A304, M304, MA304, K302.3.5, K303, K304
leak test, 345.2.1, 345.4, 345.5, 345.6, 345.7, A345.2.1, A345.4.2, K345.2.1, K345.4.2
Interpretation of Code, Introduction, App. Z
Interrupted welding, 330.2.4

Jacketed piping, 301.7.3, 345.2.5
leak test, 345.2.5
Joining
materials, 325, 328.3, Table A326.1, A328.3.1, A328.5.1, A328.5.3, A328.5.5, A328.5.6, K328.3
metals, 327, 328, 333, 335, A329, A335, M335, K328, K333
nonmetallic lined materials, A329, A335.2.5
nonmetals, A328, A334, A335
nonplastic nonmetals, A334
Joint (*see also* specific types of joint)
alignment, 328.4.2, 328.4.3, 335.1.1, M335.1.1
assembly, 335, A335, M335
design, def. (welded), 300.2
fit-up, A328.4
fluid service requirements, 300(d), 310–318, A310–A318, M310–M318, MA310–MA318, K310–K318
penetration, 328.5.4, 328.5.6, 341.3.2, Fig. 341.3.2, Table 341.3.2, K341.3.2, Table K341.3.2
preparation, 328.4, A328.4, A328.5.2, A328.5.3, A328.5.4, K328.4
Junction of services, 302.2.5, A302.2.5, M302.2.5, K302.2.5
Jurisdiction (*see* governmental)

Laid-up (*see* butt-and-wrapped)
Laps (*see* fabricated; flared; *or* forged laps)
for severe cyclic conditions, 306.4, 306.4.3
Larson-Miller parameter, App. V
Lateral (fitting), 304.3.1
Lead
effects, F323.4
fluid service requirements, 323.4.2
Leak test, 345, A345, M345, K345, X302.2.3
Life Fraction Rule, App. V
Limitations on
imperfections (*see* acceptance criteria)
temperature (*see* temperature limits)
Limits, temperature (*see* temperature limits)
Lined piping, 301.7.3, 323.4.3, A300(a), A300(d), A308.4.1, A312, A318.3, A323.4.3, A329, A335.2.6, M323.4.3, MA323.4.3, K323.4.3
Liquefied gases coverage, 300.1.1
Liquid penetrant examination, Tables 302.3.3C and 341.3.2, 341.4.3, 344.4, 345.9.1, K302.3.3, K344.4, X302.2.2
Liquid piping coverage, 300.1.1, 300.1.3
Listed
components (*see* components listed)
definition, 300.2
joints, 315.2, 318.1.1
materials, 323.1.1, M321
specifications, 323.1.1, Apps. A, B, E, and K
standards, 326.1.1, A326.1, K326.1, App. E
standards, tables, Tables 326.1, A326.1, and K326.1
Live load, 301.6.1, 304.3.5, 321.1
Loads (*see* specific type of load)
Local heat treatment, 331.2.6
Longitudinal
joints, 302.3.4, 328.4.3, Table 341.3.2, K302.3.4, K328.4.3, Table K341.3.2
stresses, 302.2.4, 302.3.5, K302.3.5
Low alloy steel (*see* steel, other than stainless)
Low temperature requirements, 323.2.2, Table 323.2.2, A323.2.2, Table A323.2.2, K323.2.2
Lubricant, thread, 325, 335.3.1, A314.2.1

Magnesium, effects, F323.4
Magnetic particle examination, Tables 302.3.3C and 341.3.2, 341.4.3, 344.3, 345.9.1, K302.3.3, K344.3
Malfunctions, 301.2.1, 301.4.3, 302.2.4
Malleable iron
allowable stresses, 302.3.2, Table A-1
fluid service requirements, 323.4.2, M323.4.2, K323.4.2, F323.4
quality factors E_c, Table A-1A
standards, Table 326.1
supports, 321.1.4
Manufacturer responsibilities, 300(b), 304.3.4, Table 323.3.1, 341.2
Materials, 323, 325, A323, M323, MA323, K323
bonding, A328
clad, 323.4.3, K323.4.3
deterioration in service, 323.5
fluid service requirements, 300(d), 323.4, A323.4, M323.4, MA323.4, K323.4
listed, 323.1.1
metallic lining, 323.4.3, K323.4.3
miscellaneous, 325
nonmetallic lining, A323.4.3
precautions, F323, FA323.4
properties for flexibility analysis, 319.3, A319.3, App. C
reclaimed, 323.1.4, A323.1.4, M323.1.4, K323.1.4
supports, 321.1.4, M321
temperature limitations, 323.2, A323.2, Tables A323.4.2C and A323.4.3, M323.2, K323.2
unknown, 321.1.4, 323.1.3, M321.1.3, K323.1.3
unlisted, 323.1.2
welding, 328, A329.1, K328
Maximum relieving pressure, 322.6.3
Mechanical joints, 300.2, 318, M318, K318

Copyright © 2015 by the American Society of Mechanical Engineers.
No reproduction may be made of this material without written consent of ASME.

Mechanical loads, 313, 314.2.1, 314.2.2, 319.1, 321.1.1, A323.4.1, K314.1
Mechanical strength allowance, 320.4.1
Metallic bellows expansion joints, 345.3.3, 345.4.2, F304.7.4, App. X
Metallic–nonmetallic piping, 301.7.3, 304.7.3, A304.7.3
Misalignment (*see* alignment)
Miscellaneous materials, 325
Miter, def., 300.2
Miter bend
  flexibility analysis, 319.4.4
  fluid service requirements, 306.3, A306.3, M306.3, MA306.3, K306.3
  pressure design, 304.2.3, A304.2.3
Modulus of elasticity, 319.3.2, 319.5.1, A319.3.2, App. C, App. D
Moments in piping, 319.4.4
Movements
  of connected equipment, 301.8, 319.2.1
  of piping, 304.3.5, 319.6, A319.6
  of supports, 301.8, 304.3.5, 319.2.1
Multiple branches, 304.3.3, 304.4.3
Multiple outlet closures, 304.4.2

Natural gas piping, 300.1.1, 300.1.3
Nickel and nickel alloys, Tables A-1, A-1A, A-1B, and A-2, F323.4
Nomenclature and symbols, 300.3, App. J
Nominal, 300.2
Nominal pipe size (NPS), 300.2, App. J
Nonmetallic lined piping, 300(d), Ch. VII, MA300, MA323.4.3
Nonmetallic lining material, A323.4.3
Nonmetallic–metallic piping, 301.7.3, 304.7.3, A304.7.3
Nonmetals, 300(d), Ch. VII, MA300–MA346, App. B, Tables C-5 and C-8
Nonplastic nonmetals,
  fluid service requirements, A323.4.2
  joining, A334
  repair of defects, A334.2
Normal Fluid Service
  definition, 300.2
  requirements for, 300(d), 305.1, 306.1.1, 306.3.1, 306.4.1, 306.4.2, 306.5.1, 307.1.1, 308.1.1, 309.1.1, 311.1, 314.1, 315.2, 317.2, 318.1.1, Table 341.3.2, 341.4.1, A305, A306.1.1, A306.3, A306.5.1, A311.1, A314.1, A318.3, A341.4.1
Notch-sensitive, 300.2
Notch toughness (*see* impact testing *and* toughness)
NPS (*see* nominal pipe size)

Occasional loads, 302.3.6, A302.3.4, K302.3.6
Occasional variations (*see* allowances for pressure-temperature variations)
Oil piping coverage
  in-plant, 300.1.1
  transmission lines, 300.1.3, Fig. 301.1.1
Openings in closures, 304.4, A304.4, M304.4
Operators, qualification, 328.2, A328.2, K328.2
O-rings, 325
Outlet fittings, 304.3.1, 304.3.2, 304.4.2, 306.1.3, M306.5
Outlet headers (*see* extruded outlets)
Owner's
  approval, 328.3.1, 345.4.3, A345.5.1, K302.2.1, K304.8.5, K328.3
  guide to classif. fluid serv., App. M
  option for testing, 345.1, 345.7
  responsibilities, 300(b), 300(d), 300(e), 302.2.1, 302.2.4, 340.2, 346.3, M300(a), K300(a), K300(b), K302.2.1, K304.8.5, K328.3.1, K333, App. M
Owner's Inspector (*see* Inspector)
Oxidizing fluid service, F323.4, F335.9

Packaged equipment, 300.1.2, Fig. 300.1.1, 300.2
Packed joints, 304.7.4, 318, 318.2.3, 321.2.1, 335.6.2, A335.5, A335.6, K318, F323.1 (*see also* caulked joints)
Packing, joint or valve, 325, F323.1
Pad, reinforcing (*see* reinforcing ring)
Peening of welds, 328.5.1
Penetration (*see* joint penetration)
Performance testing, A304.7.2, K304.7.2
Petroleum refinery, def., 300.2
Pipe
  definitions, 300.2
  fittings, 306, A306, M306, K306
  fluid service requirements, 305, A305, M305, K305
  pressure design, 304.1, A304.1, K304.1
Pipe bends
  fluid service requirements, 306.2, A306.2, M306.2, K306.2
  pressure design, 304.2.1, A304.2.1, K304.2.1
Pipe hangers, 321.2.2, 321.3.1
Pipe supports, 300.2, 301.8, 321, A321, M321, K321
Piping
  clad, 323.4.3, K323.4.3
  Code coverage, 300.1.1, Fig. 300.1.1
  components (*see* components)
  connections for (*see* connections)
  cross-country, 300.1.3, Fig. 300.1.1
  definition, 300.2
  elements, def., 300.2
  excluded, 300.1.3, Fig. 300.1.1
  fire protection, 300.1.3
  high pressure (*see* high pressure piping)
  instrument (*see* instrument piping)
  jacketed, 301.7.3, 345.2.5
  joints (*see* joint; *see also* specific type of joint)
  lined (*see* lined piping)
  moments, 319.4.4
  movements, 319.6, A319.6
  pressure relief (*see* pressure relief piping)
  supports, 321, A321, M321, K321
  transmission lines, 300.1.3

Copyright © 2015 by the American Society of Mechanical Engineers.
No reproduction may be made of this material without written consent of ASME.

Piping system, def., 300.2
Plumbing, 300.1.3
Pneumatic leak test, 341.4.1, 345.1, 345.5, A345.5, K345.1, K345.5
P-Numbers, 328.2.1, 328.2.2, 331.1.3, Tables 330.1.1 and 331.1.1, 332.4.1, 341.3.1, K330.1.1, K331.1, K332.4.1, Table A-1, Table K-1
Poisson's ratio, 319.3.3, A319.3.3
Postweld heat treatment (*see* heat treatment)
Power boilers, 300.1.3, Fig. 300.1.1
Precautions, App. F
  materials, F323.4, FA323.4
Preheating, 300.2, 330, Table 330.1.1, A328.4, K330
Preparation (*see also* joint preparation)
  for testing, 345.3
Pressure, allowable (*see* allowable pressure)
Pressure, design (*see* design pressure)
Pressure containment, 301.2.1, 301.2.2, 301.2.3
Pressure design, 303, 304, A303, A304, K303, K304
  bends, 304.2.1, A304.2.1, K304.2.1
  blanks, 304.5.3, K304.5.3
  blind flanges, 304.5.2, A304.5.2, K304.5.2
  branches, 304.3, A304.3, K304.3
  closures, 304.4, A304.4, K304.4
  crosses, 304.3.1, A304.3.2
  elbows, 304.2.2, A304.2.2, K304.2.2
  external pressure, 302.3.5, 304.1.3, 304.2.4, 304.3.3, 304.3.6, A302.3.3, A304.1.3, A304.3.2, K304.1.3, K304.2.4
  extruded outlets, 304.3.1, 304.3.4
  fatigue analysis, K304.8.4
  flanges, 304.5, A304.5, K304.5
  general, 303, A303, K303
  laterals, 304.3.1, A304.3.2
  miter bends, 304.2.3, A304.2.3
  multiple branches, 304.3.3, 304.3.4
  other components, 304.7, A304.7, K304.7
  pipe, 304.1, A304.1, K304.1
  reducers, 304.6, A304.6, K304.6
  tees, 304.3.2, A304.3.2
  welding outlets, 304.3.2, 304.4.2
Pressure relieving device, 301.2.2, 322.6, K322.6.3
Pressure relieving system, 301.2.2, 301.5.5, 302.2.4, 322.6, A322.6, M322.6, MA322, K322.6.3, F322.6
Pressure–temperature
  design criteria, 302.2, A302.2, M302, K302.2
  ratings, 302.2.1, 303, 326, A326, K302.2.1, K303, Table K326.1
  variations (*see* allowances for)
Pressure test, bellows expansion joint, X302.2.3
Pressure testing (*see* leak test)
Procedures
  bending, K332.1
  bonding, A328.2
  brazing, 333.1.1
  examination, 343
Procedures (Cont'd)
  forming, K332.3
  joining, A334
  operating, for piping, G300.2
  qualification of (*see* qualification)
  soldering, 333.4.1
  welding, 328.2, A329.1.2, K328.2
Process unit, 300.2
Progressive examination, 341.3.4, 341.5.1
Prohibitions, Introduction
Proof testing, 304.7
Protection of piping, G300.2, G300.3

Qualification
  bonders, bonding operators, A328.2
  bonding procedures, A328.2
  brazing, 333.1.1
  by others, 328.2.2, 328.2.3, A328.2.2, A328.2.3, K328.2.2, K328.2.3
  examination method, 343
  examiners, 342.1
  Owner's Inspector, 340.4
  records (*see* records)
  tests, 328.2.1, A328.2.5, K328.2.1
  welders, welding operators, 328.2.1, A329.1.2, K328.2.1
  welding procedures, 328.2, A329, K328.2
Quality assurance, weld, 319.4.5
Quality factor
  casting, 302.3.1, 302.3.3, K302.3.3, Table A-1A
  weld joint, 302.3.1, 302.3.4, K302.3.4, Table A-1B
Quantity of fluid, G300.1, G300.3

Radiography, 344.5, K344.5
  full (100%), Tables 302.3.3C and 302.3.3D, 302.3.4, 341.4.3, 344.5.3, 345.9.1, K341.4.1
  of castings, Tables 302.3.3C and 302.3.3D, K302.3.3, Table K302.3.3D
  of longitudinal joints, Tables 302.3.4, 341.3.2, and K341.3.2
  random, 341.4.1, 344.5.3, M341.4.1
  spot (*see* spot radiography)
Range, allowable stress (*see* allowable stress range)
Ratings
  at junction of services, 302.2.5, A302.2.5, M302.2.5
  pressure–temperature, 302.2.1, 303, 326, A302.2.1, A312, A326, K302.2.1, K303, Table K326.1
Reactions, piping, 319.5.2
Reclaimed materials, 323.1.4, A323.1.4, M323.1.4, K323.1.4
Records, 346
  bonding, A328.2.4
  examination, 341.4.1, 341.4.3
  procedure qualification (PQR), 300.2
  qualification, 328.2.4, 342.1, A328.2.4
  test, 345.2.7
  welding, 328.2.4

Copyright © 2015 by the American Society of Mechanical Engineers.
No reproduction may be made of this material without written consent of ASME.

Reducers, 304.6, A304.6, K304.6
Referenced specifications, Apps. A, B, E, and K
Referenced standards, 326, A326, M326, Table K326.1, App. E
  tables, Tables 326.1, A326.1, and K326.1
Refrigeration unit piping, 300.1.1, 300.1.2, Fig. 300.1.1
Regulatory considerations, Introduction
Reinforced plastic mortar (RPM)
  assembly, A335.3.5
  bonding, A328.5.1, A328.5.6, A328.5.7
  design stresses, A302.3.2, App. B
  fluid service requirements, A314.2.2, A323.4.2
Reinforced thermosetting resin (RTR)
  assembly, A335.3.5
  bonding, A328.5.1, A328.5.6, A328.5.7
  design stresses, A302.3.2, App. B
  fluid service requirements, A314.2.3, A323.4.2
Reinforcement of
  branch connections, 300.2, 304.3.3, Fig. 304.3.3, 328.5.4, Fig. 328.5.4, K304.3.3, App. H
  extruded outlet headers, 304.3.4, Fig. 304.3.4
  welds, 300.2, Table 341.3.2, Fig. 341.3.2, Table K341.3.2
Reinforcing ring (or pad, or saddle), 304.3.3, 328.5.4, Fig. 328.5.4, 331.1.3, App. H
Relieving, pressure (*see* pressure relieving)
Repair of defects, Table 302.3.3C, 328.6, 335.2.1, 335.4.1, 341.3.3, A328.7, A329.1.2, A334.1, A335.8, A341.3.3, K328.6, K341.3.3
Requalification
  bonder, bonding operator, A328.2.6
  welder, welding operator, 328.1, K328.2.1
Request for revision, App. Z
Required examination, 341.4, A341.4, M341.4, K341.4
Requirements for welding (*see* welding requirements)
Resilient support, 321.2.3
Responsibility
  bonding, A328.1
  designer, 300(b), 300(c), 300(d), 300.4, K300(b)
  erector, 300(b), 341.2
  examiner, 341.2
  fabricator (*see* fabricator responsibilities)
  Inspector (*see* Inspector responsibilities)
  manufacturer, 300(b), Table 323.2.2, 341.2
  owner (*see* owner's responsibilities)
  welding, 328.1, K328.1
Restraint
  definition, 319.2.1
  effects of, 319.2.1
  fixtures, 321.2.1
  loads due to, 301.7.1
  materials, 321.1.4
Room temperature, for tension testing, K302.3.2
Root
  imperfections, Table 341.3.2, Fig. 341.3.2, Table K341.3.2
  opening, 300.2, Figs. 328.4.2, 328.4.3, and 328.4.4
  penetration, 328.5.4, Table 341.3.2, Fig. 341.3.2, Table K341.3.2
  spacing (*see* welding preparation)
RPM (*see* reinforced plastic mortar)
RTR (*see* reinforced thermosetting resin)
Run (pipe), 304.3, 319.2.2, 319.4.1, 319.4.4, 328.5.4, App. H (*see also* header)

Saddle, 321.3.1, A306.5.2, A328.5.3, A328.5.4, A328.5.5, A328.5.6 (*see also* reinforcing ring)
Safeguarding, safeguards, 300(d), 300.2, 305.2.2, 308.2.4, 313, Table 314.2.1, 314.2.2, 315.2, 317.2, 318.2.3, 323.4.2, A323.4.1, A323.4.2, M300(d), FA323.4, App. G
Safety relief (*see* pressure relieving)
Scope of Code, 300.1
  diagram of scope, Fig. 300.1.1
Seal bond, 300.2, A311.2.4, A328.7
Seal weld, 300.2, 311.2.6, 314.1, 328.5.3, 331.1.3, 335.3.2, K311.2.6
Sensitive leak test, 345.8, 345.9.3, M345.1, K345.1
Separator, 307, M307, K307
Set Pressure, 322.6.3
Severe cyclic conditions, 300(d), 300.2, 305.2.3, 306.1.4, 306.2.3, 306.3.3, 306.4.3, 306.5.2, 308.2.1, 308.2.4, 309.2.4, 311.2.2, 311.2.3, 314.1, 317.2, 318.2.2, 323.4.2, Table 341.3.2, 341.4.3, A300(e), M300(e), K302
Shear, allowable stress, 302.3.1, K302.3.1
Shear test, 323.4.3
Shielding of piping, G300.3
Shock, hydraulic, 301.5.1, 315.1, 321.1, A302.1, A304.7.2, A323.4.1, K304.7.2
  thermal, A302.1, A304.7.2, A323.4.2, A335.8.1
Size of weld, 300.2, Fig. 328.5.2, 328.5.4, Fig. 328.5.4, 328.5.5, Fig. 328.5.5
Slag, 300.2, Tables 341.3.2 and K341.3.2
Sliding supports, 321.2.2
Slip-on flanges (*see* flanges)
Snow loads, 301.6.1, 321.1
Socket weld, 311.2.4, 311.2.5, 328.5.2, Fig. 328.5.2, 331.1.3, Table 341.3.2, 341.4.3, M311.1, K311.2.3
Soldered joints, 317, 325, 333, M317, K317.1, K333, F323.1
Soldering, 300.2, 333
Solvent cemented joints, A328.5.3
Spacing (*see* welding preparation)
Special joints, 318, 335.6, A318, A335.6, M318, M335.6, K318, K335.4
Special testing, 345.7, 345.8, 345.9

Copyright © 2015 by the American Society of Mechanical Engineers.
No reproduction may be made of this material without written consent of ASME.

Specifications (*see also* standards)
indexes to, Apps. A, B, and K
listed, 302.2.1, 302.2.2, 323.1.1
referenced, Apps. A, B, E, and K
unlisted, 302.2.3, 323.1.2
Spiral (helical seam) weld (*see* longitudinal joint)
Spot radiography, Table 302.3.4, 341.5.1, 344.5.2
Spring support, 321.2.3
Squirm (bellows expansion joint), X302.2.3
Stainless steel, Tables A-1, A-1A, A-1B, A-2, C-1, C-3, and C-6, F323.4
Standards (*see also* specifications)
component, 302.2.1, 302.2.2, 302.2.3, 303, 326, A326, M326, K326
dimensional, 326.1, M326.1
rating, 302.2.1, 303, 326.2
referenced, Tables 326.1, A326.1, K326.1, App. E
unlisted, 302.2.3
Static sparking, A335.2.5
Status of Appendices, 300(f), 300.4
Steam piping coverage, 300.1.1, 300.1.3, Fig. 300.1.1
Steel, other than stainless, Tables A-1, A-1A, A-1B, A-2, C-1, C-3, and C-6, F323.4
Stiffening, pipe under external pressure, 304.1.3
Stop valves, 322.6.1, F332.6
Straight threads, 314.2.2, 335.3.3, M314.2.2, M335.3.3, K314.3.2, K341.4.1
Strainer, 307, M307, K307
Strains (*see* displacement strains)
Strength of branch connections, 304.3.2, A304.3.2, K304.3
Stress amplitude (alternating), K304.8.2, K304.8.3
Stress analysis, 319.4, 321.1.3, 345.9.2, A319.4, M319.4, K319
experimental, 304.7.2
fatigue, K304.8
rigorous, 319.4.1, M319.4, K319
simplified, 319.4.1, 319.4.2, M319.4
Stress evaluation, K304.8.4
Stress intensification factor, 319.3.6, 319.4.4, App. D
Stress range reduction factor, 302.3.5, Table 302.3.5
Stresses
allowable, 302.3.1, A302.3.1, K302.3.1, Apps. A, B, and K
analysis (*see* stress analysis)
bases, 302.3, A302.3, M302.3.2, K302.3.2
bolt design, 302.3.2(a), Table A-2
design (nonmetals), A302.3, App. B
displacement, 319.2.2, A319.2.2
displacement range, 302.3.5, 319.1, 319.3.4, K302.3.5
allowable, 302.3.5, K302.3.5
computed, 319.4.4
flexibility, 319.2.2, 319.4.4, A319.2.2
limits, 302.3.1, 302.3.5, 302.3.6, 321.1.3, A302.3.1, A302.3.3, A302.3.4, K302.3.1, K302.3.5, K302.3.6
longitudinal, 302.3.5, K302.3.5
Stresses (Cont'd)
occasional loads, 302.2.4, 302.3.6, A302.2.4, A302.3.4, M302.2.4, MA302.2.4, K302.2.4, K302.3.6
pressure, 304, A304, M304, MA304, K304
sustained loads, 302.3.5, A302.3.3, K302.3.5
tabulated, Tables A-1, A-2, B-1, and K-1
terms, defined, 300.2
Structural attachments, 321.3
definition (*see* pipe-supporting elements)
Structural connections, 321.4
Structures, support, 321.4 (*see also* piping. def.)
Sulfur compounds, effects, F323.4
Supplementary examination, 341.5, A341.5, K341.5
Supports, 321, A321, M321, K321
anchors, 319.5.1, 319.7, 321.2.1, A319.7
attachments, 311.2.5, 321.3, 328.5.2, 331.1.3, Tables 341.3.2 and K341.3.2
brackets, 321.3.2
brittle piping, A321.5.3
constant weight, 321.2.3
counterweight, 321.2.4
definitions (*see* pipe-supporting elements)
design, 321.1, A321.5, K321
fixtures, 321.2
guides, 321.2.1
hangers, 321.2.2, 321.3.1
hydraulic, 321.2.5
inextensible, 321.2.2
loads, 321.1
materials, 321.1.4, M321.1.4
movements, 301.8, 319.2.1
nonmetals, A321.5
resilient, 321.2.3
sliding, 321.2.2
spring, 321.2.3
structure, 321.4 (*see also* piping, def.)
threads for, 321.1.5
Surface texture/finish, Tables 326.1, 341.3.2, K341.3.2
Sustained loads, 302.3.5, A302.3.3, K302.3.5
Swivel joints, 319.7, A319.7
Symbols, 300.3, App. J (*see also* abbreviations, nonmetals)
System, piping
definition, 300.2
Systems (specific), design, 322, M322, K322

Tack welds, 300.2, 328.5.1, K328.5.1
Tank farm piping, 300.1.1, Fig. 300.1.1
Tantalum, F323.4
Taper threads, 314.2.1, 335.3, A314.2.1, M314.2.1, M335.3.4, K314.3.1, K344.4.1
Tapped bolt holes, 309.3, A309.3
Tees, 304.3, 319.4.4, A304.3.2 (*see also* branches and fittings)

Copyright © 2015 by the American Society of Mechanical Engineers.
No reproduction may be made of this material without written consent of ASME.

Temperature
cycles, 302.3.5, 319.2.3, K304.8.1
design (*see* design temperature)
gradients, 301.7.2, K304.7.2, F301.7
limits, limitations, 323.2, A323.2.2, Table A323.4.3, M323.2, K323.2
minimum (*see* design minimum temperature)
Test, 345, A345, M345, K345
assembly, A328.2.5
joint, 328.2.2, K328.2.1
loads, 302.3.6, 321.1, K302.3.6
records, 345.2.7
requirements, 323.4.3, 328.2.2, 345.1, K328.2.1, K345.1
stresses, 302.3.6, 345.2.1, A302.3.4
Test,
alternative, 345.9, K345.1
burst, A328.2.5(b)
hardness, 331.1.7, 341.5.2
hydrostatic, 345.1, 345.4, A328.2.5(c), A345.1, A345.4, K345.1, K345.4
impact, Table 323.2.2, 323.3, Table 323.3.1, K323.3, Table K323.3.1, F323.4
leak, 345.1, A345.1, K345.1
performance, A304.7.2, K304.7.2
pneumatic, 341.4.1, 345.1, 345.5, K345.1
pressure, 345, K345
proof, 304.7.2
qualification, 328.2.1, A328.2.5, K328.2.1
sensitive leak, 345.8, M345, K345.1
shear, 323.4.3
toughness (*see* impact)
Thermal
analysis (*see* flexibility analysis)
cycling, 301.10, 302.3.5, 319.2, A319.2, K302.3.5, K304.8
gradients, 301.7.2, K304.7.2, F301.7
Thermal expansion
coefficients, 319.3.1, A319.3.1, App. C
data, App. C
differential, 301.7.3
effects (*see* expansion effects)
of fluids, 301.4.2
of piping, 301.7, 319, A319, M319, K319
relief, 301.2.2
stresses, 319.2.2, 319.4, A319.2.2
Thermally induced loads, 301.7, F301.7
Thermoplastics
bonding, A328.5.1, A328.5.2, A328.5.3, A328.5.4
definition, 300.2
design stresses, A302.3.2, App. B
fluid service requirements, A314.2.1, A323.4.2
precautions, FA323.4
Thermosetting resin, (including RPM, RTR)
definition, 300.2
Thickness
allowances, 302.4, 304.1.1, 304.4.1, 304.5.2, 304.5.3, A304.1.1, K304.1.1, K304.5.2
effect on heat treatment, 331.1.3, K331.1.3
Threaded joints
assembly, 335.3, 341.4.1, 341.4.3, A335.3, M335.3, K341.4.1
fluid service requirements, 314, A314, M314, MA314.1, K314
seal bonds, A311.2.4, A328.6, A335.3.2
seal welds, 311.2.6, 314.1, 328.5.3, 335.3.2, K311.2.6, K335.6
Threads
allowance, 302.4, 304.1.1, A304.1.1, K304.1.1
compound, 314.1, 325, 335.3.1, 335.3.2, A335.3.2
condition of, M335.3.4, K341.4.1
for supports, 321.1.5
lubricant, 325, 335.3.1, A314.2.1
sealant, A314.2.1, A335.3.2, A335.3.5
standards, Tables 326.1, A326.1, and K326.1
Tie rods, 319.7, A319.7
Tin
effects, F323.4
fluid service requirements, 323.4.2
Titanium, Tables A-1 and A-1B, F323.4
Tolerances, 328.4.3, Figs. 328.4.3 and 328.4.4, A328.2.1
Torque, bolting (*see* bolting torque)
Toughness, 301.9 (*see also* impact test)
requirements, 314.2.1, 323.2.2, 323.3, K323.2.2, K323.3
Transmission pipelines, 300.1.3, Fig. 300.1.1
Trap, 307, K307
Tubing joints, 315, 335.4, A315, A335.4, M315, M335.4, K315
Tungsten inclusion, Table 341.3.2
Two-phase flow, 301.7.2, F301.7

Ultrasonic examination, Table 302.3.3C, 341.4.1, 341.4.3, 344.6, K305.1, K341.4.1, K344.6
Unbalanced piping system, 319.2.2, 319.7, A319.2.2, A319.7
Uninsulated piping, 301.3.2
Unknown materials, 321.1.4, 323.1.3, M323.1.3, K323.1.3
Unlisted
components (*see* components, unlisted)
joints, 315.3, 318.1.2
materials, 323.1.2
Unstable fluids, 300(c), F323(a)
Used materials, 323.1.4, A323.1.4, M323.1.4, K323.1.4

Valve packing, 300(c), 325, F307, F323.1
Valves
fluid service requirements, 302.2.5, 307, 323.4.2, A302.2.5, M302.2.5, M307, K307, F307
heat treatment, 328.5.1
relief, 301.2.2, 322.6.3 (*see also* device)
stop, 322.6.1, F322.6

Copyright © 2015 by the American Society of Mechanical Engineers.
No reproduction may be made of this material without written consent of ASME.

Variations, pressure–temperature (*see* allowances for)
Vent (piping) (*see* pressure relief piping)
Venting (welds), 328.5.4, F308.2
Vibration effects, 301.5.4, 304.7.2, 313, 315.1, 321.1, A304.7.2, A323.4.1, M301.5.4, K301.5.4, K304.7.2
Visual examination, 302.3.3, Table 341.3.2, 341.4, 344.2, Table K341.3.2, K341.4.1

Wall thickness
  allowance, 302.4, 304.1.1, A304.1.1, K304.1.1
  governing, 331.1.1, K331.1.1
  pressure design, 304, A304, K304
  thinner component $\overline{T}_w$, Table 341.3.2, 344.6.2, Table K341.3.2, App. J
Water hammer, 301.5.1
Water piping coverage, 300.1.1, 300.1.3
Weight loads, 301.6, 321.1
Weld (*see also* welded joints; welds; welding)
  definition, 300.2
  fluid service limitations, 311, A318.3, M311, K311
  hardness limits, 331.1.7
  identification, 328.5.1
  quality assurance, required, 319.4.5
  quality factor E_j, 302.3.4, Tables 302.3.4 and A-1B, K302.3.4
  reinforcement (excess thickness), 300.2, Table 341.3.2, Fig. 341.3.2, Table K341.3.2
  size, 300.2, Figs. 328.5.2, 328.5.4, and 328.5.5
Welded joints
  acceptance criteria (imperfections), Table 341.3.2, Fig. 341.3.2, Table K341.3.2
  fabrication, 328, A328.5.2, A329, M328, K328
  fluid service requirements, 311, A318.3, M311, K311
Welder, 300.2, 328.2, A329.1.2, K328.2
Welding
  alignment, 328.4.3, K328.4.3
  environment, 328.5.1
  heat treatment, 331, M331, K331
  hot gas, A328.5.2
  imperfections (*see* welded joints)
  interrupted (*see* interrupted welding)
  materials, 328.3, M328.3, K328.3
  neck flanges (*see* flanges)
  nonmetallic lined pipe, A318.3, A329
Welding (Cont'd)
  of aluminum, 323.4.2
  of metals, 328, K328
  operator, 300.2, 328.2, A329.1.2, K328.2
  outlet fittings, 304.3.1, 304.4.2, 306.1.2, M304.3.2
  preheating, 330, Table 330.1.1, K330
  preparation, 328.4, K328.4
  procedures, 300.2, 328.2, A329.1.2, K328.2
  qualification, 328.2, A329.1.2, K328.2
  quality assurance, 319.4.5, 341.3
  records, 328.2.4, K328.2.4
  repair, Table 302.3.3C, 328.6, 341.3.3, A329.1.2, K328.6, K341.3.3
  requirements, 328.5, A329, K328.5
  responsibility, 328.1, K328.1
  spacing, 328.4.3
Welds
  branch, 328.4.3, Fig. 328.4.4, 328.5.4, Fig. 328.5.4, K328.4.3, K328.5.4, Fig. K328.5.4
  circumferential, 328.4.2, 328.4.3, 328.5.1, K328.4.2, K328.4.3, K328.5.1
  closure, 345.2.3(c)
  dissimilar metals, 331.2.3
  fillet (*see* fillet weld)
  laps (*see* fabricated laps)
  longitudinal (*see* longitudinal joints)
  miter, 328.4.3
  seal, 328.5.3
  socket, 328.5.2, Fig. 328.5.2C
  tack, 328.5.1, K328.5.1
Wind loads, 301.5.2, 302.3.6, 321.1, A302.3.4, K302.3.6
Wrapped (*see* butt-and-wrapped)

X-ray examination (*see* radiography)

Young's modulus, 319.3.2, A319.3.2, App. C, App. D
Y-values (for metal pipe), 304.1.1, Table 304.1.1

Zinc
  coatings, K323.4.2
  effects, F323.4
Zirconium and zirconium alloys, F323.4

Copyright © 2015 by the American Society of Mechanical Engineers.
No reproduction may be made of this material without written consent of ASME.

NOTES FOR INDEX

GENERAL NOTES:

(a) Reference is not made to a paragraph that merely states that a previous paragraph applies.

(b) To locate references with letter prefix:

Prefix	Location	Prefix	Location	Prefix	Location
A*	Chapter VII	G	App. G	M	Chapter VIII
B	App. B	H	App. H	MA	Chapter VIII
C	App. C	K	Chapter IX, App. K	X	Appendix X
D	App. D				
F	App. F				

*For Tables A-1, A-1M, A-1A, A-1B, A-2, and A-2M, see Appendix A.

Copyright © 2015 by the American Society of Mechanical Engineers.
No reproduction may be made of this material without written consent of ASME.

ASME B31.3 INTERPRETATIONS VOLUME 24

Replies to Technical Inquiries April 30, 2012 through December 16, 2013

GENERAL INFORMATION

It has been agreed to publish interpretations issued by the B31 Committee concerning B31.3 as part of the update service to the Code. The interpretations have been assigned numbers in chronological order. Each interpretation applies to the Edition stated in the interpretation, or if none is stated, to the Edition in effect on the date of issuance of the interpretation. Subsequent revisions to the Code may have superseded the reply.

These replies are taken verbatim from the original letters, except for a few typographical and editorial corrections made for the purpose of improved clarity. In some instances, a review of the interpretation revealed a need for corrections of a technical nature. In these cases, a revised reply bearing the original interpretation number with the suffix R is presented. In the case where an interpretation is corrected by errata, the original interpretation number with the suffix E is used.

ASME procedures provide for reconsideration of these interpretations when or if additional information is available which the inquirer believes might affect the interpretation. Further, persons aggrieved by an interpretation may appeal to the cognizant ASME committee or subcommittee. As stated in the Statement of Policy in the Code documents, ASME does not "approve," "certify," "rate," or "endorse" any item, construction, proprietary device, or activity.

For detailed instructions on preparation of technical inquiries to the B31 Committee, refer to Appendix Z.

NUMERICAL AND SUBJECT INDEXES

Numerical and Subject Indexes have been prepared to assist the user in locating interpretations by location or by subject matter in the Code. They cover interpretations issued from Volume 1 up to and including the present volume, and will be updated with each volume.

Copyright © 2015 by the American Society of Mechanical Engineers.
No reproduction may be made of this material without written consent of ASME.

B31.3

Subject	Interpretation	File No.
Chapter IX, High Pressure Piping (B31.3-2012)	24-13	12-1782
Fig. 323.2.2B, Design Minimum Temperature According to ASME B31T (B31.3-2010)	24-04	12-243
Para. 302.3.6(a), Limits of Calculated Stresses Due to Occasional Loads (B31.3-2012)	24-24	13-1331
Para. 304.7.2, Pressure Design (B31.3-2010)	24-09	12-1504
Para. 307.1.2, Qualification of Valve Pressure Design (B31.3-2010)	24-18	13-509
Para. 322.6.3, Relief Devices (B31.3-2012)	24-16	13-266
Para. 323.3.5, Acceptance Criteria (B31.3-2012)	24-26	13-1508
Para. 328.5.4 and Fig. 328.5.4D, Welded Branch Connection (B31.3-2010)	24-15	13-76
Para. 328.5.4, Welded Branch Connections (B31.3-2010)	24-10	12-1584
Paras. 328.5.4(d) and (e), Use of a Branch Connection Where the Abutting Branch Pipe Is Not Welded to the Run (B31.3-2012)	24-23	13-789
Para. 340.4(a), Owner's Inspectors (B31.3-2010)	24-05	12-499
Para. 341.3.1(a), NDE After PWHT for P-Nos. 3, 4, and 5 Materials (B31.3-2010)	24-30	11-1769
Para. 341.3.3, Defective Components and Workmanship (B31.3-1996 Edition Through B31.3-2012)	24-29	13-709
Para. 341.4.1(b), Sample Examinations (B31.3-2010)	24-08	12-1071
Para. 341.4.1(b)(1), Prequalification of Welds by Random Examination (B31.3-2012)	24-22	13-786
Paras. 344.2.1 and 342.1, Visual Examination (B31.3-2012)	24-21	13-710
Para. 345, Pneumatic Leak Testing (B31.3-2010)	24-11	12-1610
Para. 345.2.2(a), Examination During Leak Testing (B31.3-1996 Edition Through B31.3-2010)	24-07	12-56, 12-666
Para. 345.2.3(b), Flanged Joints (B31.3-2010)	24-19	13-620
Para. 345.2.3(c), Closure Welds (B31.3-2012)	24-25	13-1499
Para. K328.2.1(b), Welding Qualifications (B31.3-2010)	24-06	12-623
Para. K328.2.1(d), Welding Qualifications (B31.3-2010)	24-17	13-474
Random Examination (B31.3-2012)	24-20	13-704
Table 302.3.5, Weld Joint Strength Reduction Factor, *W* (B31.3-2010)	24-12	12-1728
Table 323.2.2, Low Temperature Toughness Tests for Metals (B31.3-2008)	24-27	13-1548
Table 323.2.2, Notes (3) and (5), Impact Testing (B31.3-2010)	24-01	12-57
Table 323.3.1, Impact Testing for Metals (B31.3-2010)	24-14	12-2057
Table 323.3.1, Impact Testing Requirements for Metals (B31.3-2008)	24-28	13-1549
Table 341.3.2, Acceptance Criteria (B31.3-2010)	24-03	12-241
Table 341.3.2 and Paras. 341.4.1, 341.4.2, and M341.4, Radiography for Fillet Welds (B31.3-2010)	24-02	12-102

Copyright © 2015 by the American Society of Mechanical Engineers.
No reproduction may be made of this material without written consent of ASME.

Interpretation 24-01

Subject: Table 323.2.2, Notes (3) and (5), Impact Testing (B31.3-2010)

Date Issued: April 30, 2012

File: 12-57

Question: In accordance with ASME B31.3-2010, if a material meets the requirements of Table 323.2.2, Note (3) exception to impact testing requirements, does it matter what size specimen is obtainable as described in Note (5)?

Reply: No.

Interpretation 24-02

Subject: Table 341.3.2 and Paras. 341.4.1, 341.4.2, and M341.4, Radiography for Fillet Welds (B31.3-2010)

Date Issued: April 30, 2012

File: 12-102

Question: In accordance with ASME B31.3-2010, is it a requirement to perform radiography on fillet welds?

Reply: No.

Interpretation 24-03

Subject: Table 341.3.2, Acceptance Criteria (B31.3-2010)

Date Issued: April 30, 2012

File: 12-241

Question: In accordance with ASME B31.3, if indications are detected in the base metal or a weld not required to be examined, are the indications required to be evaluated?

Reply: The Code does not specifically address this issue. However, the Introduction states that the owner is responsible for imposing requirements supplementary to those of the Code if necessary to assure safe piping for the proposed installation. Also see para. 300(c)(4).

Copyright © 2015 by the American Society of Mechanical Engineers.
No reproduction may be made of this material without written consent of ASME.

Interpretation 24-04

Subject: Fig. 323.2.2B, Design Minimum Temperature According to ASME B31T (B31.3-2010)

Date Issued: April 30, 2012

File: 12-243

Question (1): In accordance with ASME B31.3-2010, may Fig. 323.2.2B be used for impact-tested materials in the same manner as described in the ASME BPV Code rules?

Reply (1): No. See interpretation 20-13R.

Question (2): In accordance with ASME B31.3-2010, is the use of ASME B31T, Standard Toughness Requirements for Piping, mandatory?

Reply (2): No.

Question (3): In accordance with ASME B31.3-2010, does Fig. 323.2.2B apply to UNS S31803 (22Cr duplex)?

Reply (3): No.

Interpretation 24-05

Subject: Para. 340.4(a), Owner's Inspectors (B31.3-2010)

Date Issued: April 30, 2012

File: 12-499

Background: An EPC (Engineering, Procurement, and Construction) contractor has been awarded a contract to engineer, procure, construct, and install a pressure piping system.

Question (1): Does ASME B31.3 allow an EPC contractor to act as the owner's inspector until the piping system is complete and ready to be turned over to the owner?

Reply (1): No.

Question (2): Does ASME B31.3 allow the owner to designate in writing an employee of the EPC contractor to act as the owner's inspector until the piping system is complete and ready to be turned over to the owner?

Reply (2): No.

Copyright © 2015 by the American Society of Mechanical Engineers.
No reproduction may be made of this material without written consent of ASME.

Interpretation 24-06

Subject: Para. K328.2.1(b), Welding Qualifications (B31.3-2010)

Date Issued: April 30, 2012

File: 12-623

Question (1): In accordance with ASME B31.3-2010, is a separate qualification of the welding procedure required for each combination of base material specification(s) forming a joint in Chapter IX, High Pressure Piping, even if the material type or grade remains the same?

Reply (1): Yes; see para. K328.2.1(b).

Question (2): In accordance with ASME B31.3-2010, if a welded joint comprised of two different material specifications with the same type or grade in Chapter IX, High Pressure Piping, is qualified, does the welding procedure also qualify welding of each individual base material to itself?

Reply (2): No; see para. K328.2.1(b).

Copyright © 2015 by the American Society of Mechanical Engineers.
No reproduction may be made of this material without written consent of ASME.

Interpretation 24-07

Subject: Para. 345.2.2(a), Examination During Leak Testing (B31.3-1996 Edition Through B31.3-2010)

Date Issued: October 5, 2012

File: 12-56, 12-666

Question (1): In accordance with ASME B31.3-1996 Edition through ASME B31.3-2010, para. 345.2.2(a), must examination for leaks be performed in accordance with the visual examination method in para. 344.2?

Reply (1): No.

Question (2): Other than sensitive leak testing, do ASME B31.3-1996 Edition through ASME B31.3-2010, define leak testing examination requirements?

Reply (2): No.

Question (3): In accordance with ASME B31.3-1996 Edition through ASME B31.3-2010, para. 345.2.2(a), must personnel performing the examination for leaks be qualified for visual examination per paras. 342.1 or 344.2?

Reply (3): No.

Question (4): In accordance with ASME B31.3-1996 Edition through ASME B31.3-2010, para. 345.2.2(a), must leak testing be performed in accordance with a written procedure for visual examination?

Reply (4): No.

Question (5): Other than sensitive leak testing, do ASME B31.3-1996 Edition through ASME B31.3-2010 require compliance with the requirements of ASME BPV Code Section V, Articles 9 or 10 for leak testing?

Reply (5): No.

Question (6): In accordance with ASME B31.3-1996 Edition through ASME B31.3-2010, during a hydrostatic leak test, if the examiner is satisfied that the requirements of para. 345.2.2(a) are met, is a 100% visual examination (i.e., a visual examination of 360 deg of the pipe or joint surface) of each joint or connection required?

Reply (6): No.

Interpretation 24-08

Subject: Para. 341.4.1(b), Sample Examinations (B31.3-2010)

Date Issued: October 5, 2012

File: 12-1071

Question: If one welder makes the tack welds in a circumferential butt weld and another welder welds the root pass and remainder of the weld, is it required that the welder who made the tack welds be represented in the sample examinations required by para. 341.4.1(b) or the progressive sampling of para. 341.3.4?

Reply: No.

Copyright © 2015 by the American Society of Mechanical Engineers.
No reproduction may be made of this material without written consent of ASME.

Interpretation 24-09

Subject: Para. 304.7.2, Pressure Design (B31.3-2010)

Date Issued: October 5, 2012

File: 12-1504

Question: In accordance with ASME B31.3-2010, para. 307.1.2, Unlisted Valves, if valve pressure–temperature ratings are established by the method set forth in ASME B16.34, Appendix B, is it necessary to qualify the pressure design in accordance with ASME B31.3, para. 304.7.2?

Reply: No.

Interpretation 24-10

Subject: Para. 328.5.4, Welded Branch Connections (B31.3-2010)

Date Issued: October 5, 2012

File: 12-1584

Question: In ASME B31.3-2010, for the installation of instrument tap type branch connections, do the weld types specified in ASME Section VIII, Division 1, UW-15(b) (i.e., welds that require no strength calculations) and corresponding acceptable welding types shown in UW-16, which include not-fully-penetrated branch connection groove welds, comply with the acceptable welding details shown in ASME B31.3, para. 328.5.4?

Reply: No; however, see para. 300(c)(3).

Interpretation 24-11

Subject: Para. 345, Pneumatic Leak Testing (B31.3-2010)

Date Issued: October 5, 2012

File: 12-1610

Question: In accordance with ASME B31.3-2010, para. 345.5.4(a), with or without the owner's approval, does the Code permit pneumatic testing in excess of 1.33 times the design pressure?

Reply: No; however, see para. 300(c)(3).

Copyright © 2015 by the American Society of Mechanical Engineers.
No reproduction may be made of this material without written consent of ASME.

Interpretation 24-12

Subject: Table 302.3.5, Weld Joint Strength Reduction Factor, *W* (B31.3-2010)

Date Issued: October 5, 2012

File: 12-1728

Question (1): In accordance with ASME B31.3-2010, Table 302.3.5, is the weld strength reduction factor, *W*, for P91 alloy steel material (CSEF subcritical) at 950°F equal to 0.5?

Reply (1): Yes.

Question (2): In accordance with ASME B31.3-2010, Table 302.3.5, should the weld strength reduction factor, *W*, for P91 alloy steel material be the same value as in ASME B31.1-2010?

Reply (2): The ASME B31.3 Committee is unable to provide the information you have requested. The Committee does not respond to requests for rationale. Code rules reflect not only technical data and safety criteria, but also the collective experience of the Committee members. Interdependence of rules in various Chapters also plays a part in any given requirement.

If you believe, however, that a particular Code rule or rules may benefit from consideration of new or additional data and approaches, the Committee welcomes your desire to contribute. We invite you to submit pertinent material for transmittal to the Code Section Committee involved.

If you desire, an invitation can be extended for you to attend a meeting of the Committee at which the material will be discussed. We appreciate your interest.

Copyright © 2015 by the American Society of Mechanical Engineers.
No reproduction may be made of this material without written consent of ASME.

Interpretation 24-13

Subject: Chapter IX, High Pressure Piping (B31.3-2012)

Date Issued: April 15, 2013

File: 12-1782

Question (1): Does ASME B31.3-2012 require compliance with Chapter IX, High Pressure Piping, under any circumstance other than when such compliance is specified by the owner?

Reply (1): No; see para. K300(a).

Question (2): Does ASME B31.3-2012 require that piping designed for a pressure in excess of that allowed by ASME B16.5, Class 2500 rating for the specified design temperature and material group be designed in accordance with Chapter IX if the piping system is not designated by the owner as being in High Pressure Fluid Service?

Reply (2): No; see para. K300(a).

Interpretation 24-14

Subject: Table 323.3.1, Impact Testing for Metals (B31.3-2010)

Date Issued: April 15, 2013

File: 12-2057

Question (1): Do rows 4 through 7 of Table 323.3.1 of ASME B31.3-2010 apply to welds used in the manufacture of piping components?

Reply (1): No.

Question (2): Do rows 1 through 3 of Table 323.3.1 of ASME B31.3-2010 apply to welds used in the manufacture of piping components?

Reply (2): Yes.

Interpretation 24-15

Subject: Para. 328.5.4 and Fig. 328.5.4D, Welded Branch Connection (B31.3-2010)

Date Issued: April 15, 2013

File: 13-76

Question: Does ASME B31.3-2010 permit the use of a complete (full) encirclement split-tee as a branch connection, where a branch pipe is butt welded to the branch opening of the split-tee, if the requirements of paras. 303 and 304.7.2 are met?

Reply: Yes. See also paras. 300(c)(3) and 300(c)(4).

Interpretation 24-16

Subject: Para. 322.6.3, Relief Devices (B31.3-2012)

Date Issued: April 15, 2013

File: 13-266

Question: Does ASME B31.3 require that all relief devices that meet para. 322.6.3 but not API 526 be evaluated as unlisted components?

Reply: Yes; see para. 302.2.3.

Copyright © 2015 by the American Society of Mechanical Engineers.
No reproduction may be made of this material without written consent of ASME.

Interpretation 24-17

Subject: Para. K328.2.1(d), Welding Qualifications (B31.3-2010)

Date Issued: April 15, 2013

File: 13-474

Question (1): In accordance with ASME B31.3-2010, para. K328.2.1(d), if transverse tensile testing is required for a full penetration groove weld test coupon for Welding Procedure Qualification in accordance with the ASME BPV Code, Section IX, shall yield strength be determined on the transverse tensile test coupon?

Reply (1): Yes.

Question (2): In accordance with ASME B31.3-2010, para. K328.2.1(d), shall all-weld-metal tensile testing be conducted and the yield strength of the weld be determined if transverse tensile testing is required for a full penetration groove weld test coupon for Welding Procedure Qualification in accordance with the ASME BPV Code, Section IX?

Reply (2): No, unless the filler metal is not yet incorporated into Section IX (see para. K328.3.1).

Interpretation 24-18

Subject: Para. 307.1.2, Qualification of Valve Pressure Design (B31.3-2010)

Date Issued: April 15, 2013

File: 13-509

Question: Does para. 307.1.2 of ASME B31.3-2010 permit a valve manufactured from a material not listed in ASME B16.34 to have the pressure–temperature rating established in accordance with the method set forth in ASME B16.34?

Reply: Yes.

Interpretation 24-19

Subject: Para. 345.2.3(b), Flanged Joints (B31.3-2010)

Date Issued: April 15, 2013

File: 13-620

Question (1): In accordance with ASME B31.3-2010, do components listed in Table 326.1 need to be leak tested in accordance with para. 345?

Reply (1): We believe your question can be answered by previous interpretation 23-14.

Question (2): Does the phrase "previously been tested" in para. 345.2.3(b) refer to leak testing in accordance with the requirements of ASME B31.3?

Reply (2): Yes.

Interpretation 24-20

Subject: Random Examination (B31.3-2012)

Date Issued: April 15, 2013

File: 13-704

Question: Does ASME B31.3-2012 prohibit commencement of random examination prior to completion of all welds in a designated lot?

Reply: No.

Copyright © 2015 by the American Society of Mechanical Engineers.
No reproduction may be made of this material without written consent of ASME.

Interpretation 24-21

Subject: Paras. 344.2.1 and 342.1, Visual Examination (B31.3-2012)

Date Issued: October 3, 2013

File: 13-710

Question (1): Does ASME B31.3-2012 have any qualification requirements for visual examiners performing Code-required examinations?

Reply (1): Yes. See paras. 342.1 and 344.2.

Question (2): Does ASME B31.3-2012 require individuals that check the fit and alignment of weld joints during fabrication to be qualified for visual examination as described in paras. 342.1 and 344.2?

Reply (2): No.

Interpretation 24-22

Subject: Para. 341.4.1(b)(1), Prequalification of Welds by Random Examination (B31.3-2012)

Date Issued: October 3, 2013

File: 13-786

Question: When ASME B31.3-2012, para. 341.4.1(b)(1) requires random examination of 5% of circumferential girth or miter groove welds by radiography or ultrasonic examination for Normal Fluid Service, must all welds in the lot be completed prior to the completion of the required examinations on the selected welds?

Reply: The Code does not address this issue. See previous interpretations 2-12 and 24-20.

Interpretation 24-23

Subject: Paras. 328.5.4(d) and (e), Use of a Branch Connection Where the Abutting Branch Pipe Is Not Welded to the Run (B31.3-2012)

Date Issued: October 3, 2013

File: 13-789

Question: Under the rules of ASME B31.3-2012, may a branch connection be added to a piping run using branch attachment details other than specified by para. 328.5.4(d), which require fully penetrated groove welds to the run pipe, or para. 328.5.4(e)?

Reply: No, unless qualified in accordance with paras. 300(c)(3), 300(c)(4), and 304.7.2.

Copyright © 2015 by the American Society of Mechanical Engineers.
No reproduction may be made of this material without written consent of ASME.

Interpretation 24-24

Subject: Para. 302.3.6(a), Limits of Calculated Stresses Due to Occasional Loads (B31.3-2012)

Date Issued: October 3, 2013

File: 13-1331

Question (1): Is the final paragraph in para. 302.3.6(a) applicable to castings only?

Reply (1): Yes.

Question (2): Does ASME B31.3 permit the occasional stress of austenitic steel piping to rise above yield?

Reply (2): Yes; however, see para. 302.3.2(e).

Interpretation 24-25

Subject: Para. 345.2.3(c), Closure Welds (B31.3-2012)

Date Issued: October 3, 2013

File: 13-1499

Question: If a pipe is bent in accordance with para. 306.2, can it be installed using closure welds without being leak tested in accordance with para. 345?

Reply: No.

Interpretation 24-26

Subject: Para. 323.3.5, Acceptance Criteria (B31.3-2012)

Date Issued: October 3, 2013

File: 13-1508

Question (1): In accordance with ASME B31.3-2012, para. 323.3.5(a), do the acceptance criteria for minimum energy requirements apply to carbon and low alloy steels having specified minimum tensile strengths equal to or greater than 656 MPa (95 ksi) or for high alloy steels (P-Nos. 6, 7, and 8)?

Reply (1): No. See para. 323.3.5(b) for acceptance criteria for these materials.

Question (2): In accordance with ASME B31.3-2012, para. 323.3.5(c), are the acceptance criteria for weld impact test requirements applicable for clad-pipe to clad-pipe welds?

Reply (2): No. See paras. 323.3.5(a) and 323.3.5(b).

Question (3): In accordance with ASME B31.3-2012, para. 323.3.5(c), when dissimilar base metals (e.g., P1 and P8) are joined by welding and the weld metal has a tensile strength most closely matching that of the P8 base material, shall the acceptance criteria for impact tests conform to the lateral expansion requirements of para. 323.3.5(b)?

Reply (3): Yes.

Copyright © 2015 by the American Society of Mechanical Engineers.
No reproduction may be made of this material without written consent of ASME.

Interpretation 24-27

Subject: Table 323.2.2, Low Temperature Toughness Tests for Metals (B31.3-2008)

Date Issued: October 3, 2013

File: 13-1548

Question: In accordance with ASME B31.3-2008, when ASTM B423 N08825 base metal is welded by SFA-5.14 ERNiCrMo-3 N06625 filler metal, do the rules of Table 323.2.2, Box A-6(b) require that testing in accordance with Box B-6 be performed?

Reply: Yes.

Interpretation 24-28

Subject: Table 323.3.1, Impact Testing Requirements for Metals (B31.3-2008)

Date Issued: October 3, 2013

File: 13-1549

Question: In accordance with ASME B31.3-2008, Table 323.3.1, box A-5, is the qualified thickness range $T/2$ to T + 6 mm (¼ in.)?

Reply: Yes. Also see previous Interpretation 4-17.

Interpretation 24-29

Subject: Para. 341.3.3, Defective Components and Workmanship (B31.3-1996 Edition Through B31.3-2012)

Date Issued: December 12, 2013

File: 13-709

Question: Is it the intent of ASME B31.3-1996 Edition through ASME B31.3-2012, para. 341.3.3 to allow replacement welds for rejected welds to be examined by any nondestructive (NDE) method that is allowed for the original welds, as it is for high pressure piping system welds in K341.3.3, rather than requiring the same NDE method as used on the original defective welds?

Reply: Yes.

Interpretation 24-30

Subject: Para. 341.3.1(a), NDE After PWHT for P-Nos. 3, 4, and 5 Materials (B31.3-2010)

Date Issued: December 16, 2013

File: 11-1769

Question: A piping assembly made of P-No. 5 material consisting of several welds is furnace heat treated and radiographed. One of those welds is defective and repaired. The assembly is then heat treated again. Is it the intent of para. 341.3.1(a) that all of the welds in that piping assembly be radiographed again?

Reply: No.

Copyright © 2015 by the American Society of Mechanical Engineers.
No reproduction may be made of this material without written consent of ASME.

NUMERICAL INDEX

Code references are based on ASME B31.3-1990 or later editions. References in brackets are to previous editions and addenda.

Reference	Interpretation
Introduction	1-3
	1-6
	1-7
	13-04
	20-08
300	7-10
	8-17
	19-11
300(b)	1-26
	1-32
	4-08
	5-03
	8-09
	10-11
	13-14
300(c) [300(e)]	1-3
	1-6
	1-7
	3-2
	3-4
	4-10
	6-03R (Vol. 7)
	7-05
	8-30
	13-02
	16-12
	18-09
	19-31
	19-48
	20-03
	20-20
	20-38
300(c)(3)	22-32
300.1	7-10
	8-17
	9-06
	12-20
	21-07
	21-32
300.1.1	1-47
	1-52
	2-26
	3-1
	4-19
	6-01
	8-01
	9-02
	17-01
	22-34

Reference	Interpretation
Fig. 300.1.1	1-8
	1-19
	2-26
	7-10
	8-17
	22-39
300.1.3 [300.1.4]	1-8
	1-16
	1-19
	1-26
	3-2
	15-09
300.1.3(d)	10-05
	21-22
300.2	
Category D Design Temperature	22-06
Category D Fluid Service	4-13
	5-03
	6-01
	19-34
Category M Fluid Service	1-40
	1-73
	6-01
	8-09
	9-02
flammable	21-25
notch-sensitive	2-22
owner	2-30
piping components	3-2
	8-01
	14-03
	17-23
	21-24
	22-41
piping system	1-30
	9-06
severe cyclic conditions	5-12
	8-09
Table 300.4	20-23
301	5-11
301.1	20-40
301.2	2-3
	7-01
301.2.1	2-29
	13-15

Reference	Interpretation
301.3	2-3
	17-07
	22-06
301.3.1	10-02
	21-47
301.3.2	4-11
	23-06
301.5.3	4-07
301.7.2	3-4
301.10	22-04
302	1-32
	19-03
302.2	1-50
302.2.1	16-18
302.2.2	17-11
	19-02
302.2.3	19-19
302.2.4 [302.2.3]	1-3
	1-32
	2-14
	3-4
	4-11
	7-01
	7-04
	8-04
	14-09
	17-12
	20-03
	20-22
	20-51
	21-45
	22-04
	22-37
302.2.5	13-15
302.3	20-25
302.3.2	1-18
	1-38
	2-16
	3-13
	8-25
	11-05
	16-04
	19-37
	19-38
Table 302.3.3C	23-10
302.3.4	2-20
	17-14

Copyright © 2015 by the American Society of Mechanical Engineers.
No reproduction may be made of this material without written consent of ASME.

Reference	Interpretation
Table 302.3.4	1-42
	1-78
	2-20
	3-11
	20-34
	21-06
	21-37
	22-10
302.3.5	1-20
	1-50
	2-14
	2-15
	2-24
	3-4
	4-10
	4-12
	6-03R (Vol. 7)
	6-07
	7-04
	7-05
	8-16
	15-15
	16-11
	17-04
	17-18
	18-16
	20-02
	21-34
	22-07
Table 302.3.5	16-10
	22-36
	24-12
302.3.6	1-50
	2-15
	2-16
	2-17
	19-18
	20-02
	20-49
	20-50
302.3.6(a)	24-24
302.4	1-20
303	6-05
304.1	23-16
304.1.1	1-42
	1-54
	1-70
	13-07
	15-06
	15-10
	16-14
	21-38
	22-21

Reference	Interpretation
304.1.2	1-42
	1-57
	1-68
	1-70
	2-11
	10-20
	21-13
	22-04
304.2	15-14
304.2.1	21-13
304.2.2	18-06
304.2.3	1-22
	5-11
Fig. 304.2.3	1-22
304.3	1-21
	1-46
	5-01
	6-09
304.3.1	19-33
304.3.2	4-05
304.3.3	4-03
	7-02
	8-06
	8-37
	11-10
	12-05
	14-10
	15-05
	17-26
	21-39
	23-18
Fig. 304.3.3	8-37
304.3.4	1-21
	1-37
	1-55
	1-75
	2-27
Fig. 304.3.4	1-70
304.3.5	12-13
304.3.5(e)	22-20
304.5	3-4
	9-07
	10-14
	19-12
304.5.1	8-18
	20-12
304.5.1(b)	9-10

Reference	Interpretation
304.7.2	1-51
	3-2
	4-05
	5-05
	5-11
	6-09
	10-07
	10-11
	10-18
	12-09
	13-02
	13-03
	13-05
	13-11
	19-29
	20-26
	20-37
	21-02
	21-34
	23-03
	23-07
	24-09
304.7.4	1-16
305.1	22-43
305.2	3-8
	3-9
305.2.1	1-38
305.2.3	6-01
	7-03
	21-29
306.4	12-16
306.4.2	11-03
307.1.2	24-18
308.2.1	5-12
308.2.4	5-12
311.2.4	6-02
	6-05
311.2.5	10-04
312	9-07
314	20-48
314.2.1	2-22
Table 314.2.1	8-33
	11-16
315.2	3-6
315.3	3-6
317.2	1-17
318	8-13
318.2.2	19-45
319.1.1	20-48
319.2.1	2-17
	20-45
319.2.3	7-04
	7-05
	12-06
	18-13
319.3.1	19-40
	21-09

Copyright © 2015 by the American Society of Mechanical Engineers.
No reproduction may be made of this material without written consent of ASME.

Reference	Interpretation
319.3.1(b)	15-24
	21-16
319.3.2	21-26
319.3.5	4-10
319.3.6	1-6
	1-7
	1-55
	2-24
	5-15
	13-05
	22-20
Table 319.3.6	9-01
319.4.1	1-33
	13-14
319.4.3	23-04
319.4.4	1-71
	2-7
	2-24
319.7	1-16
	7-05
321.1.1	6-07
321.1.4	1-49
	19-36
	21-41
322.3	17-24
322.6.1	10-10
	12-18
322.6.3	1-32
	2-21
	2-29
	7-01
	12-04
	14-09
	22-30
	24-16
323.1	19-28
323.1.1	8-19
	17-09R (Vol. 18)
	19-41
323.1.2	1-11
	1-15
	1-48
	2-1
	6-06
	8-07
	8-19
	11-03
	15-04
	17-01
	17-08
	19-27
323.2	3-9
323.2.1	1-13
323.2.2	15-12
	15-25
	19-07
	19-21
	19-35
	19-39
	19-47
	20-15
	20-31
	23-08
	23-12
323.2.2(d)	22-26
	22-44
323.2.2(f)	22-23
Fig. 323.2.2	14-08
	20-13R (Vol. 23)
	20-15
	21-28
	21-40
Fig. 323.2.2B	24-04
Table 323.2.2 [Table 323.2.1]	1-12
	1-48
	1-65
	1-76
	2-19
	3-8
	4-01
	4-15
	14-12
	15-11
	15-16
	17-09R (Vol. 18)
	18-12
	20-31
	21-01
	21-43
	22-03
	23-01
	23-13
	24-01
	24-27
323.2.4	6-06
323.3	1-76
	5-13
	20-14
	22-01
Table 323.3.1 [Table 323.3.2]	1-12
	1-76
	4-17
	5-19
	5-21
	8-29
	10-02
	11-12
	15-23
	20-10
	20-31
Table 323.3.1 [Table 323.3.2] (Cont'd)	
	21-18
	24-14
	24-28
323.3.2	11-12
323.3.4	8-30
Table 323.3.4	22-02
323.3.5	2-9
	24-26
Table 323.3.5	5-14
323.4	15-03
323.4.2	10-01
	10-19
Table 326.1	1-11
	1-51
	2-3
	8-07
	8-34
	19-14
	22-05
328	7-02
	12-12
	20-39
328.1	12-07
328.2 [327.5]	1-66
	11-09
	14-13
	20-19
Fig. 328.2(b)	22-32
328.2.1 [327.5.1, 327.5.2]	1-76
	4-17
	8-29
	19-22
	20-19
	20-43
328.2.2	20-19
328.2.2(g)	14-05
328.2.2(i)	19-26
328.2.3	15-19
	18-08
328.4	13-01
328.4.2 and Fig. 328.4.2	12-10
328.4.3	14-04
Fig. 328.4.4	8-28
	9-08
328.5 [327.4]	5-09
328.5.1 [327.4.1]	5-17
	22-25
	22-35
328.5.2 [327.4.2]	5-12
	16-06
	19-20
Fig. 328.5.2 [Fig. 327.4.2]	1-28
	5-12
	6-02
	6-05
	8-27
	15-08
	19-16

Copyright © 2015 by the American Society of Mechanical Engineers.
No reproduction may be made of this material without written consent of ASME.

Reference	Interpretation
Fig. 328.5.2 [Fig. 327.4.2] (Cont'd)	
	20-01
328.5.3	20-05
328.5.4 [327.4.4]	1-59
	1-74
	2-10
	4-03
	4-14
	7-08
	8-13
	10-04
	13-11
	21-02
	22-22
	24-10
	24-15
328.5.4(d)	24-23
328.5.4(e)	24-23
Fig. 328.5.4 [Fig. 327.4.4]	1-59
	1-74
	4-03
	4-16
	7-08
328.6	2-18
330	8-21
330.1	8-23
Table 330.1.1	9-05
331	8-12
	20-39
	21-46R (Vol. 23)
331.1.1	8-08
	9-05
	14-01
	19-15
Table 331.1.1 [Table 331.3.1]	1-69
	2-2
	5-06
	8-24
	9-03
	12-14
	14-16
	17-01
	20-44
	21-12
	21-19
331.1.2	8-05
331.1.3 [331.3.6]	1-39
	1-59
	4-06
	5-06
	9-03
	11-06
	14-01
	15-18
	17-13
	17-21
	18-02
	19-24

Reference	Interpretation
331.1.3 [331.3.6] (Cont'd)	
	22-19
331.1.4 [331.1.2]	5-08
331.1.6 [331.3.4]	5-08
	16-09
331.1.7 [331.3.2]	1-78
	8-22
331.2	18-04
331.2.2 [331.1.1]	1-39
	1-78
331.3.4	8-05
331.3.7	8-05
332.1	8-03
	19-04
332.2 [329.1]	1-23
	1-53
	4-02
	8-20
332.2.2	16-08
332.4 [329.3, 330.2]	2-2
	19-04
332.4.2	11-03
	15-17
335.1.1	15-07
	17-25
335.2	2-5
335.2.3	17-20
	21-14
Fig. 335.3.3(a)	20-36
340.2 [336.1.2]	1-26
340.3 [336.3]	1-10
	10-03
340.4 [336.2]	1-31
	17-15
	20-33
340.4(a)	24-05
341	10-16
	15-13
	19-49
	21-17
341.1.4.1	21-20
341.2 [336.1.1, 336.1.3]	1-10
	1-26
	1-27
	2-28
	10-03
341.3.1 [336.5]	1-64
	2-4
	19-15
	21-48
341.3.1(a)	24-30
341.3.2	8-32
	21-44
	22-40
Fig. 341.3.2 [Fig. 327.4.1]	5-09
	13-16

Reference	Interpretation
Table 341.3.2	14-02
	14-07
	14-15
	16-07
	17-03
	17-22
	18-07
	20-16
	20-20
	20-34
	23-02
	24-02
	24-03
[Table 327.4.1A]	1-1
	1-9
	1-14
	1-41
	2-8
	5-04
	5-13
	5-16
	5-17
	5-18
	5-20
	6-04
	7-06
[Table 341.3.2A]	8-32
	8-38
	9-04
	11-08
	11-14
	12-22
	13-16
341.3.3	14-14
	22-33
	24-29
341.3.4 [336.5, 336.5.4]	1-62
	2-25
	2-32
	3-5
	3-14
	10-09
	10-12
	11-02
	11-04
	13-12
	16-01
	16-02
	16-05
	18-01
341.4 [336.5]	1-24
	1-45
	3-12
	5-20
	11-01
	21-23
	22-17

Copyright © 2015 by the American Society of Mechanical Engineers.
No reproduction may be made of this material without written consent of ASME.

Reference	Interpretation
341.4.1 [336.5.1]	1-10
	1-26
	1-27
	1-60
	2-12
	2-28
	3-7
	3-12
	4-12
	5-10
	8-02
	8-10
	8-26
	10-03
	10-17
	11-11
	11-14
	11-15
	18-14
	19-05
	19-42
	20-09
	20-34
	21-04
	24-02
341.4.1(b)	24-08
341.4.1(b)(1)	24-22
341.4.2	8-38
	24-02
341.4.3	8-10
	20-09
341.5	8-38
341.5.1 [336.6.1]	1-5
	3-12
	20-34
342	15-21
342.1 [336.4.1]	2-28
	21-05
	24-21
343 [336.4.1]	2-28
344 [336.4]	5-09
	16-13
	18-11
	20-42
344.1	13-12
344.1.3	24-20
344.2 [336.4.2]	2-28
	8-10
	8-26
	11-11
	15-21
	18-17
344.2.1	19-17
	24-21
344.2.2	21-20
344.5 [336.4.5]	1-10
	1-60
	2-12

Reference	Interpretation
344.5.1	20-34
	20-41
	22-08
344.6 [336.4.6]	1-60
344.6.2	10-17
344.7 [336.4.7]	2-28
	3-14
	12-01
	19-17
344.7.1	11-11
	21-20
345 [337]	1-2
	1-72
	2-31
	3-3
	8-31
	16-03
	17-30
	19-23
	19-30
	19-49
	20-17
	21-11
	23-14
	24-11
345.1 [337.1]	1-4
	1-30
	4-04
	6-08
	8-15
	12-21
	20-24
	21-36
	22-14
345.1(b)	23-05
345.1(d)	23-20
345.2.2	8-31
	18-10
	20-46
	20-47
	21-42
345.2.2(a)	24-07
345.2.3	20-07
	20-11
	20-24
	20-27
345.2.3(a)	22-15
	22-18
345.2.3(b)	24-19
345.2.3(c)	21-10
	22-16
	24-25
345.2.3(i)	17-28
	20-37
345.2.4 [337.4.3]	1-35
	23-17
345.2.5	19-44

Reference	Interpretation
345.2.6 [337.1]	1-2
	5-22
	19-23
	20-06
345.3 [337.3]	2-6
	3-10
	5-02
	12-03
345.3.1	20-28
	22-09
	22-27
345.3.4	22-14
345.4	8-04
	19-25
	22-11
345.4.1	12-19
345.4.2 [337.4.1]	1-35
	1-61
	1-63
	2-23
	4-04
	9-09
	13-13
	18-03
	19-10
	20-46
345.4.3 [337.4.2]	1-63
345.5 [337.4.4]	1-35
	1-43
	6-08
	11-07
	13-06
	19-32
	22-11
	23-15
345.5.1	22-14
345.5.2	11-19
	23-11
345.5.4	12-02
	20-46
345.7 [337.5.2]	1-36
345.8 [337.6]	1-25
	3-10
	17-02
	19-06
	20-18
345.9 [337.5.1]	4-09
	5-07
	6-08
	8-15
	10-15
	12-01
	12-21
	15-02
	17-05
	17-10
	18-15
	20-18

Copyright © 2015 by the American Society of Mechanical Engineers.
No reproduction may be made of this material without written consent of ASME.

Reference	Interpretation
345.9.1	20-06
	20-43
A302.2.3	20-30
A302.2.4	21-33
A304	8-14
A304.1.1	14-17
	14-18
A304.5.1	1-67
A304.7.2	13-08
A305	11-17
A314	8-33
A322.6	17-29
A323.4.2	10-06
	11-18
	21-30
	21-31
Table A326.1	20-30
A327.2.4	7-09
A328	21-15
A328.2(a)	10-08
A328.2.1	8-14
	18-05
A328.2.5	17-06
A328.5	8-14
	10-08
	13-08
Chapter IX	24-13
K300	20-09
K300(a)	17-16
K303	20-21
K304.1.2	11-21
	14-11
K304.8	22-04
K314.2	17-19
K315	7-07
K322.3	7-07
K323.1.2	19-09
K323.1.5	21-03
Table K323.3.1	20-41
	21-18
K323.3.5	21-27
Table K326.1	20-21
K328.2.1(a)	17-27
K328.2.1(b)	24-06
K328.2.1(d)	24-17
Fig. K328.5.4	8-37
K341.4.2	20-09
K346.2(b)	21-03
M305.1	12-15
M307.2	8-35
M313	21-21
M314.2.2	20-36
M322.3	2-13
	3-6

Reference	Interpretation
M323.1.3	3-7
M326	2-13
M335.3.3	20-36
M335.4 [M335.5, M335.6]	3-6
M341.4 [M336.5]	1-24
	1-45
	20-09
	24-02
M341.4.1 [M336.5.1]	2-28
	3-7
M345	20-47
M345.1	6-08
MA306.5	9-02
MA313	21-21
MA323.4	9-02
	19-08
MA323.4.2	8-35
Appendix A Notes (no equivalent) [(14)]	2-20
Note (17)	4-18
Note (20) [(30)]	1-77
Note (57) [(2)]	1-58
Appendix A	
Table A-1 [Table 1]	1-13
	1-18
	1-29
	1-38
	1-48
	1-77
	2-1
	3-8
	3-9
	3-13
	4-12
	4-13
	6-01
	6-06
	7-03
	8-11
	8-18
	8-25
	8-34
	8-36
	11-13
	12-09
	15-01
	19-43
	19-46
	20-29
	20-32
	21-28
	22-12
	22-28
	22-42
	23-19

Reference	Interpretation
Table A-1B [Table 1]	1-78
	2-20
	4-18
	7-03
	23-09
Appendix B	19-13
Table B-1	22-38
Appendix D	1-6
	1-7
	1-34
	1-46
	1-55
	1-56
	1-71
	2-7
	2-24
	4-16
	5-01
	5-15
	6-06
	12-08
	12-11
	12-17
	13-05
	18-18
Appendix E [Appendix K]	1-44
	5-10
	19-20
Appendix F [F323.2]	1-29
Appendix F, F323	20-20
Appendix F, FA323.4	20-30
Appendix G	5-12
Appendix H	8-06
	11-10
Appendix J	1-28
	1-54
	1-75
	5-04
Appendix M	6-01
	8-09
	20-23
Appendix P	22-07
Appendix V	17-17
Appendix X, X3.1.3	12-23
Appendix X, X3.2.2	13-09
Appendix X, X302.2.3	15-22
Case 137	3-1
Case 141	1-51
Case 181	22-13
	22-29
	22-31

Copyright © 2015 by the American Society of Mechanical Engineers.
No reproduction may be made of this material without written consent of ASME.

SUBJECT INDEX

Subject	Interpretation
Acceptance Criteria	
pressure tests	1-2
weld	1-1
	1-9
	1-14
	1-41
	2-8
	5-09
	5-13
	5-17
	5-18
	5-20
	6-04
	7-06
	8-32
	12-22
	13-16
	14-02
	14-07
	24-03
	24-26
Allowable Loads	14-06
Allowable Stresses	4-12
bases for	1-18
	3-13
	8-11
	8-25
	10-13
	15-01
for ASTM A182	22-28
for ASTM A312	1-29
for ASTM A351	11-13
for ASTM A387	8-25
for ASTM A464	8-11
for ASTM A570	1-38
for ASTM A587	1-13
for ASTM A671	1-48
for austenitic stainless steels	3-13
for unlisted alloy steel pipe	19-09
Allowable Stress Range	22-07
	23-19
Alterations of Piping	13-04
Alternative Tests (see *Leak Tests*)	
Authorized Inspector (see *Owner's Inspector*)	
Bellows	13-09
Bending	4-02
	8-03
	15-17
	16-08
Bends	
corrugated	1-23
miter (see *Miter Bends*)	
reduction of outside diameter	8-20
Bolting Materials	4-15
	17-20
	20-12
	21-14
Bonding Qualification Test	
hot gas welded	8-14
minimum burst pressure	7-09
	8-14
procedure specifications for plastic piping	10-08
	21-15
requirements	18-05
solvent cement	8-14
Bonds	
heat fusion	8-14
hot gas welded	8-14
test assembly	7-09
Branch Connections	
couplings	19-33
extruded outlets	1-37
	2-27
	6-09
flexibility analysis	9-01
integrally reinforced fitting	4-05
	11-10
projection into run pipe	8-28
	9-03
reinforcement	8-06
	8-37
	12-05
	12-13
	14-10
Branch Connections (Cont'd)	
reinforcement (Cont'd)	
	15-05
	21-39
weld requirements	2-10
	4-03
	4-14
	7-02
	7-08
	10-04
	13-11
	17-26
	22-22
	23-18
	24-23
Brazed Joints	
for flammable service	1-17
Buckles	1-23
	1-53
Casting Quality Factor	23-10
Cast Irons	
specific requirements	10-01
Category D Design Temperature	22-06
Category D Fluid Service	
alternative pressure test for	1-36
limitations	4-13
	5-03
	21-47
radiographic examination	8-38
	21-23
Category M Fluid Service	
clarification of term	1-73
	9-02
	20-23
double contained piping	8-35
fittings	20-36
leak test	6-08
liquid oxygen	8-09
piping flexibility	21-21
requirements	8-35
	9-02
	12-15
tubing size limitations	2-13
"very small quantity"	1-40

Copyright © 2015 by the American Society of Mechanical Engineers.
No reproduction may be made of this material without written consent of ASME.

Subject	Interpretation
Code Case	22-13
	22-29
	22-31
Code Coverage	
B31.3 versus B31.4	1-47
	7-10
B31.3 versus B31.9	21-32
buried piping	21-07
cryogenic piping	21-22
fired heaters	15-09
general hydrocarbon service	6-01
inline sensing devices	8-01
	21-24
intent	16-12
later editions	19-01
new and replacement piping	5-22
	12-21
	19-49
offshore platform	8-17
oil heating system	4-19
radioactive fluids	12-20
synfuel plant piping	1-52
	2-26
tobacco plant piping	3-1
Components (see also *Fittings, Flanges, Standard Components, Unlisted, and Valves*)	
certification	1-26
	3-7
	5-10
	13-10
defining	17-23
	20-11
design conditions	2-3
fabricated or flared flaps	11-03
	12-16
inline sensing devices	8-01
	21-24
listed	20-25
metric size	19-29
referenced standards	1-44
	5-10
	22-05
Compressors	
internal piping	1-8
Corrugated Bends	1-23
Cyclic Loading	5-12
	17-04
Design (see also *Pressure Design*)	
additional design considerations	12-13
calculations	20-26
	21-13
conditions	2-3
for stainless bellows	12-23
Lame theory	1-57
minimum temperature	10-02
	24-04
qualification	20-38
	20-40
Displacement Strain	20-45
Displacement Stress	2-14
	2-24
	12-06
	18-13
	21-09
Earthquake (see *Seismic*)	
Effective Date	22-24
Empty System	
transportation	9-06
Examination	
acceptance criteria	16-07
during leak test	24-07
extent of	1-24
	5-18
	11-01
	21-04
	21-23
in-process	3-14
	11-15
liquid penetrant (see *Liquid Penetrant Examination*)	
personnel	21-05
postweld heat treatment	21-48
progressive (see *Progressive Examination*)	
radiographic (see *Radiographic Examination*)	
random	1-27
	1-45
	1-62
	2-12
	2-32
	4-12
	11-15
	24-20
	24-22
records	11-11
	21-20
Examination (Cont'd)	
required	1-24
	1-60
	6-04
	11-14
	11-15
	15-13
	15-21
	18-14
	21-17
	22-17
sample	24-08
severe cyclic conditions	10-17
	11-14
spot	1-62
types	16-13
	18-11
ultrasonic (see *Ultrasonic Examination*)	
visual (see *Visual Examination*)	
Exclusions	
for compressors and internal piping	1-8
for interconnecting piping	1-19
	21-22
listed in scope	10-05
Expansion Joints	1-16
	12-23
	13-09
Extruded Outlet	
pressure design of	1-21
	1-70
tees considered as	1-55
Extruded Welded Tee	5-01
Fatigue	18-09
Fillet Weld	
internal, slip-on flange	8-27
pressure containing	8-13
size	1-74
use	10-04
	23-09
	24-02
Fittings	
B16.9	1-7
	5-01
	19-14
	20-21
conforming to two grades	8-18

Copyright © 2015 by the American Society of Mechanical Engineers.
No reproduction may be made of this material without written consent of ASME.

Subject	Interpretation
Fittings (Cont'd)	
flared, flareless, or compression types	3-6
	12-16
MSS SP-75	1-11
Flame Arrester	22-39
Flammable Service	1-17
	21-25
Flanges	
assembly	2-5
design	1-67
	3-4
	9-07
general	9-10
long welding neck	4-05
slip-on	5-12
	8-27
use of aluminum	1-51
use of raised and flat face metallic	9-07
Flexibility Analysis	
branch connections	9-01
exemptions from	1-33
modulus of elasticity	21-26
qualification	13-05
	13-14
thermal expansion data	15-24
	21-16
Flexibility Characteristic	
effect of branch to run diameters	1-56
for a tee	1-55
	1-56
	5-01
for components not listed in Appendix D	1-55
	2-24
Flexibility Factors	
basis for	1-56
for B16.9 tee	1-7
	12-08
	12-17
for fabricated intersections	1-6
	4-16
	5-15
for pressure piping components	13-05
for welded elbows	1-6
Fluid Service	
definition	19-34
	20-23
Fluid Service (Cont'd)	
general hydrocarbon	6-01
requirements, metallic	11-16
	12-15
	12-16
	15-03
requirements, nonmetallic	11-17
	11-18
	21-30
	21-31
responsibility for categorizing	4-08
	8-09
Graphitization	
temperature relative to onset	1-58
Hardness	
limitations on	2-2
records	8-22
testing	15-20
Heat Fusion Joints	13-08
Heat Treatment	
cooling rate	1-69
for austenitic stainless steel	1-65
for bending and forming	2-2
	19-04
for carbon steel pipe	21-12
for flared laps	11-03
for valve parts	8-12
governing thickness	1-39
	1-59
	4-06
	5-06
	11-06
heating rate	1-69
local	5-08
	8-05
monitoring	5-08
	8-05
postweld	20-39
	20-44
	22-19
	24-30
requirements	8-08
	8-21
	8-23
	8-24
	9-03
	9-05
	12-14
	14-01
	14-16
	15-18
	18-04
Heat Treatment (Cont'd)	
requirements (Cont'd)	
	21-46
	21-48
SP-1 through SP-5	8-24
when radiography is required	1-64
	2-4
High Pressure Piping	24-13
Hydrostatic Tests (see *Leak Tests*)	
Impact Tests	
absorbed energy data	2-9
alternative methods	8-30
base metal	4-01
	11-12
	18-12
	20-10
	24-14
exclusions from	1-76
	5-14
	8-30
HAZ	23-13
heat treatment required	5-19
in qualifying procedures	8-29
of aluminum filler metals	2-19
of austenitic stainless steel	1-65
of bolting materials	4-15
of duplex stainless steel	20-13
of heat-affected zone	1-76
	5-21
of high pressure piping	21-27
of weldments	1-12
	1-65
	1-76
	5-21
	19-21
	21-19
requirements	15-23
	17-09
	20-31
	21-18
size specimen	24-01
temperature limitation	5-14
	8-30
	14-12
	19-07
	19-43
	21-01
	21-28
	21-43
	22-01
	22-02
	22-26
	22-44
	23-08

Copyright © 2015 by the American Society of Mechanical Engineers.
No reproduction may be made of this material without written consent of ASME.

Subject	Interpretation
Impact Tests (Cont'd)	
temperature limitation (Cont'd)	
	24-27
	24-28
Imperfections (see also *Acceptance Criteria*)	
concave root surface	1-1
	6-04
determination of	8-32
lack of fusion	5-09
porosity	1-9
	5-13
	5-16
	5-20
slag inclusion	5-20
tungsten inclusions	1-9
	5-17
undercutting	1-14
	2-8
	6-04
Installed Piping	1-30
Instrument Piping	7-07
	8-01
Internal Piping, Equipment	1-8
Joint Factors	
for ASTM A234, ASTM A312, ASTM A403	2-20
for branch connections	8-06
for circumferential welds	1-42
for longitudinal and spiral (helical seam) welds	1-78
	3-11
	8-06
	17-14
	20-34
Joints	
alignment	15-07
	17-25
circumferential bends	5-11
exposed during test	2-6
	3-10
	22-09
instrument tubing	7-07
leak tested	24-19
special	8-13
tapered pipe thread	16-15
threaded	11-16
	17-19
	20-48
Lateral Fittings	1-6

Subject	Interpretation
Leak Tests	
acceptance criteria	1-2
	15-22
	16-03
	23-14
	24-07
alternative	4-09
	5-07
	6-08
	8-15
	12-01
	12-21
	17-05
	17-10
	18-15
	20-18
	23-05
as nondestructive examination	8-31
external design pressure	19-44
for Category D fluid service	1-36
for Category M fluid service	20-47
for system designed for 0 psi	2-31
isolation of test pump	1-2
leakage	1-4
minimum hydrostatic test pressure	2-23
	4-04
minor repairs and additions	1-2
negative pressure	22-11
of discharge piping	1-72
of joints	20-28
of newly constructed systems	1-4
	5-02
	5-22
	8-15
	20-24
of piping and vessel	1-63
of piping connecting equipment	3-3
of replacement piping	5-22
	12-21
painting before test	2-6
	3-10
	5-23
personnel qualification	8-31
pneumatic test	11-07
	11-19
	12-02
	13-06
	19-23
	19-30
	19-32

Subject	Interpretation
Leak Tests (Cont'd)	
pneumatic test (Cont'd)	
	20-17
	22-30
	24-11
preparation for	2-6
	3-10
	5-02
	5-23
	12-03
reduced pressure (hydrostatic test)	1-61
	2-23
	13-13
	20-17
	22-27
requirements	8-15
	13-13
	22-14
	22-15
	22-18
	23-15
sensitive	1-25
	17-02
	19-06
	19-23
system pneumatic leak test pressure	22-30
temperature correction for	1-35
	1-43
test fluid	12-19
test pressure	12-04
	19-10
time	20-46
	21-11
	21-42
vents and drains	23-20
welds	20-06
	20-07
	20-35
	21-10
	21-36
Lethal Substance	1-73
Limitations	
on hardness	2-2
on imperfections (see *Imperfections*)	
on tubing size	2-13
	3-6
Liquid Penetrant Examination	
requirements	11-14
Low Temperature Requirements (see *Impact Tests*)	

Copyright © 2015 by the American Society of Mechanical Engineers.
No reproduction may be made of this material without written consent of ASME.

Subject	Interpretation
Materials	
API 5L	1-78
	2-4
	3-9
	3-11
	6-01
	6-06
API 5LX	2-4
	11-05
ASTM A234	2-20
ASTM A312	1-29
	1-77
	2-20
ASTM A350	19-07
ASTM A351	11-13
ASTM A387	8-25
ASTM A403	1-77
	2-20
ASTM A487	8-07
ASTM A537	2-1
ASTM A570	1-38
ASTM A587	1-13
ASTM A633	1-11
ASTM A658	3-8
ASTM A671	1-48
ASTM B241	2-19
ASTM B337	4-18
ASTM B464	8-11
austenitic stainless steels	3-13
bases for design stresses	11-05
carbon steel	19-39
certification	5-10
	8-02
	13-10
	21-03
conforming to two grades	8-18
	8-34
listed	17-09R (Vol. 18)
	17-11
	22-12
	22-42
notch sensitive	2-22
notes	20-29
reidentification	8-19
toughness requirements	5-19
traceability	19-28
unlisted material	11-05
	11-20
	15-04
	17-01
	17-08
	19-27
Mechanical Interlock	19-45

Subject	Interpretation
Miter Bends	
pressure design of	1-22
	5-11
Near Straight Sawtooth Runs	
explanation of	1-33
Nomenclature	
d	1-54
T	1-28
T_W	5-04
	5-16
t_n	1-75
Nonmetallic Piping	
fluid service requirements	11-17
	11-18
in Category M Fluid Service	8-35
joint requirements	7-09
	8-14
materials	19-08
	20-30
	21-30
	21-31
pressure design	14-17
	14-18
	21-33
	22-38
Notch Sensitive	
materials	2-22
Occasional Variations (Pressure/Temperature Allowances)	1-3
	2-14
	4-11
loads	1-50
	2-15
	2-16
	2-17
	19-18
	20-49
	20-50
	21-08
Owner	
responsibilities	1-26
	2-30
	5-22
	19-11
Owner's Inspector	
qualifications of	1-31
	20-33
responsibilities of	1-26
	24-05

Subject	Interpretation
Pipe	
alterations of existing pipe	13-04
	20-04
components	22-41
curved and mitered segments	15-14
	18-06
elbowless	8-03
general	22-43
in corroded condition	2-15
instrument	17-24
made from plate	1-48
	8-36
of noncircular cross section	3-2
pressure design	13-07
	14-09
pressure testing	9-09
spiral (helical seam) welded	7-03
straight, under internal pressure	10-20
	11-21
	14-11
types	20-27
Pipe Supports	
configurations	6-07
longitudinal stress effects	7-05
materials	19-36
	21-41
use of plastic	1-49
Plastic	
lined pipe — use of screwed flanges	8-33
pipe supports	1-49
Pneumatic Tests (see *Leak Tests*)	
Positions	
qualification of welding	1-66
Postweld Heat Treatment (see *Heat Treatment*)	
Preheat (see *Heat Treatment*)	
Pressure Design	
allowance	17-12
	20-03
	20-51
	21-33
	21-45
for elevated temperatures	3-4
in the high pressure range	1-68
	17-16
of extruded headers	1-21
	1-70

Copyright © 2015 by the American Society of Mechanical Engineers.
No reproduction may be made of this material without written consent of ASME.

Subject	Interpretation
Pressure Design (Cont'd)	
of flanges and blanks	10-14
	13-15
	19-12
of miter bends	1-21
of nonmetallic piping components	14-17
	14-18
of pipe	1-42
	1-54
	1-57
	1-68
	1-70
	2-11
	11-21
	13-07
	15-06
	15-10
	17-06
	21-38
	22-04
of listed components	16-14
	16-18
of unlisted components	13-02
	13-03
	13-05
	21-34
	24-09
of valves	8-04
	13-15
Pressure Rating	
components	19-02
valve	8-04
variations	4-11
	20-22
Pressure Relief Devices	
acceptable devices	2-21
	2-29
	19-41
	23-11
and test pressure	11-07
	11-19
	12-04
	14-09
	18-03
pressure reducing station	19-31
requirements	17-29
	23-17
	24-16
setting	1-32
	7-01
	12-04
stop valves	10-10
	12-18
Pressure Surges	
loads due to	1-50
Pressure–Temperature Rating	5-05
	8-34
Pressure Test (see *Leak Test*)	
Pressure Thickness	22-21
Progressive Examination	1-5
	1-62
	3-5
	10-09
	10-12
	11-02
	11-04
	13-12
	16-01
	16-02
	16-05
	18-01
Published Specification	1-15
Radiographic Examination	
100%	5-09
	20-17
as supplementary examination	8-38
digital radiography	20-42
normal fluid service	20-20
on fillet welds	24-02
random radiography	1-27
	1-45
	1-62
	2-12
	2-32
	3-12
records	1-10
requirements	6-04
	11-01
	11-05
	12-03
	22-08
selection of welds for examination	2-25
spot radiography	1-62
	3-12
survey plugs	19-48
when PWHT is required	1-64
	2-4
Records	
certification	5-10
	8-02
	10-03
	21-03
for radiographic examination	1-10
of examinations	11-11
	21-20
of hardness tests	8-22
retention of	1-10
Reinforcement, Branch	
attachment weld	4-03
	7-08
clarification of terms	1-37
	11-10
limits of	2-27
	9-04
Reinforcement Pad Thickness	22-20
Repairs	
to welds	2-18
Responsibility	
designer	10-11
rights of owner's inspection	10-03
	17-15
Safeguarding	5-12
Scope (see *Code Coverage*)	
Seismic Loads	4-07
effect of friction	23-04
	23-12
stresses due to	2-17
Severe Cyclic Conditions	
cyclic loading	5-12
large rapid temperature change	8-09
material	21-29
spiral (helical seam) welded pipe	7-03
Simplified Flexibility Analysis	1-33
Stainless Steel	22-03
	22-23

Copyright © 2015 by the American Society of Mechanical Engineers.
No reproduction may be made of this material without written consent of ASME.

Subject	Interpretation
Standard Components	
manufacturer's markings	3-7
	8-02
valves	5-05
	8-04
	8-07
Standards	
compliance	5-10
superseded	1-44
Stresses (see also *Allowable Stresses*)	
allowable	19-37
	19-38
	19-46
	20-32
analysis	23-07
displacement stress range	7-04
	12-06
	20-02
due to cold spring	8-16
due to occasional loads	2-16
	24-24
due to pressure surges	1-50
due to seismic loads	2-17
due to sustained loads	15-15
	16-04
	16-11
	20-02
due to thermal gradients	3-4
hydrostatic design	19-13
longitudinal	1-20
	1-50
	2-15
	2-24
	4-10
	4-12
	6-03R (Vol. 7)
	6-07
	7-05
	8-16
	17-18
	18-16
ratio figure	23-01
reduction factors	16-10
	21-34
Stress Intensification Factors	
application of	1-34
	2-24
	6-03R (Vol. 7)
basis for	1-56
branch connections	2-7
for B16.9 tees	1-7
Stress Intensification Factors (Cont'd)	
for fabricated intersections	1-6
	5-15
for tees	1-46
	1-55
	1-71
	5-01
	12-08
	12-17
for unlisted components	13-05
for welded elbows	1-6
	12-11
Temperatures	
allowance	17-12
	20-03
bending	16-08
critical	22-36
design minimum temperature	10-02
	14-08
	14-12
	15-11
	15-16
	17-07
	19-35
fluid	23-06
large changes	8-09
limitations	4-13
	5-14
	15-12
	15-25
	19-47
maximum metal temperature	19-40
minimum design metal temperature (MDMT)	20-13R
reduction	4-11
	20-15
variation in elevated temperature service	17-17
verification	16-09
Thermoplastic Piping	
neat fusion joints	13-08
solvent cemented joints	10-08
specific requirements	10-06
Thickness Allowances	
governing	17-13
	17-21
	18-02
in stress calculations	1-20
wall	23-16
welding tee	18-18
Thickness Requirements	20-17
	20-41
Tubing	
category M fluid service	16-17
joints	7-07
limitations	2-13
	3-6
Ultrasonic Examination	
in place of radiography	11-05
	20-09
	20-42
requirements	10-17
Unlisted	
components	1-6
	1-51
	3-6
	4-05
	5-05
	8-07
	10-18
	10-07
	10-11
	12-09
	13-02
	13-03
	13-05
	19-03
	19-19
	20-25
	20-37
	21-34
	23-03
materials (see *Materials*)	
U-Stamp	22-34
Valves	
Category M Fluid Service	8-35
Flanged Ball Valves	16-16
materials	8-07
	15-26
pressure buildup	8-04
qualification	24-18
ratings	5-05
Visual Examination	
internal	8-10
	8-26
	13-16
requirements	2-28
	10-03
	13-16
	18-17
	24-21
Washers, Use of	2-5

Copyright © 2015 by the American Society of Mechanical Engineers.
No reproduction may be made of this material without written consent of ASME.

Subject	Interpretation
Weld	
acceptable criteria	17-03
	17-22
	18-07
	21-44
	22-40
bevels	12-10
closure	22-16
	24-25
configuration	19-16
definition	14-03
	19-05
double submerged arc welded (DSAW)	21-46R
examination of welds	10-15
	11-01
	11-14
	13-16
	14-14
	14-15
	15-02
	19-17
	19-42
	20-06
	20-43
fillet size	1-74
	10-19
	16-06
	20-01
final	19-15
for branch connections	2-10
	4-03
	4-14
	8-37
	11-10
	19-25
Weld (Cont'd)	
for branch connections (Cont'd)	
	24-10
	24-15
imperfections (see also *Acceptable Criteria*)	21-02
joint quality factor	21-06
	21-37
joint strength reduction factor	21-35
	22-37
	24-12
longitudinal	2-20
	3-11
	4-18
map	22-10
	22-25
of valves	12-12
partial joint penetration	23-02
preparation for welding	13-01
	14-04
qualification of position	1-66
reinforcement	7-08
	11-08
repair	2-18
	21-19
sign	22-25
size	22-32
socket	6-02
	6-05
	10-19
	15-08
	16-06
	19-20
spacing of	7-02
tack	22-35
Weld (Cont'd)	
types	20-05
	20-07
Welder Qualification	
by others	15-19
	18-08
	19-26
	22-35
requirements	17-27
	24-06
Welding Procedure	
qualification of	1-12
	1-65
	1-66
	1-76
	4-17
	8-23
	8-29
	11-09
	14-05
	14-13
	19-22
	24-17
responsibility	12-07
	12-12
specification	8-21
	8-22
	20-14
	20-19
	20-31
Workmanship	22-33
	24-29

Copyright © 2015 by the American Society of Mechanical Engineers.
No reproduction may be made of this material without written consent of ASME.

INTENTIONALLY LEFT BLANK

Copyright © 2015 by the American Society of Mechanical Engineers.
No reproduction may be made of this material without written consent of ASME.

B31.3 Code Cases

ASME issues replies to inquiries that are applicable to ASME B31.3. When a reply modifies the existing requirements of the Code, the inquiry and reply are issued as a Code Case.

Code Cases remain available for use until annulled by the ASME B31 Code for Pressure Piping Standards Committee.

B31.3 Code Cases that are approved after this edition will be published on the following ASME web page: http://cstools.asme.org/csconnect/CommitteePages.cfm?Committee=N10020400.

As of the date of issuance of this edition of B31.3, the following Code Cases are in effect:

Case 180	Leak testing of subassemblies of jacketed piping
Case 181	Use of alternative ultrasonic examination acceptance criteria
Case 185	Use of standard helium leak test for a vacuum-only piping system (para. 345)
Case 191	Cu–13Zn–1.1Ni–Si–Al alloy seamless pipe and tube
Case 193	Cu–5.5Zn–4Si casting alloy UNS No. C87600

SUMMARY OF CHANGES

The Code Cases affected by this edition are as follows:

Page	*Code Case*	*Change*
C-8	188	Annulled with the approval of Technical Revision 12-849
C-9	191	Added
C-10	193	Added

Copyright © 2015 by the American Society of Mechanical Engineers.
No reproduction may be made of this material without written consent of ASME.

B31 CASE 180
Leak Testing of Subassemblies of Jacketed Piping for Use in ASME B31.3 Piping Systems

Approval Date: January 5, 2007

Inquiry: Does ASME B31.3 permit an alternate leak test for jacketed piping in which it is impracticable to visually examine the welded joints and connections for leaks in accordance with para. 345.2.2(a)?

Reply: Visually observing the joints and connections during the leak test in accordance with paras. 345.2.2(a) and 345.3.1 is not required, provided all of the following conditions are satisfied:

(a) The welded joints and connections are on the inner pipe of jacketed piping.

(b) A leak test is performed that otherwise meets the requirements of para. 345.1, except visual examination of joints and connection in accordance with paras. 345.2.2(a) and 345.3.1 is not required.

(c) A sensitive leak test is performed in accordance with para. 345.8 to demonstrate leak tightness of welded joints and connections that are not visually examined during the leak testing required in (b) above.

Copyright © 2015 by the American Society of Mechanical Engineers.
No reproduction may be made of this material without written consent of ASME.

B31 CASE 181
Use of Alternative Ultrasonic Examination Acceptance Criteria in ASME B31.3

Approval Date: January 4, 2012

Inquiry: Under what conditions and limitations may alternative UT acceptance criteria apply in lieu of those described in para. 344.6.2 of ASME B31.3?

Reply: When specified by the owner, the ultrasonic examination acceptance criteria included below may be applied for welds in material greater than or equal to 25 mm (1.0 in.) in thickness[1] in accordance with ASME B31.3, provided the following requirements are met:

(a) General/Scope

(1) The examination shall be conducted using automated or semiautomated techniques utilizing computer-based data acquisition.

(2) The examination shall be performed in accordance with a written procedure approved by Level III personnel and conforming to the requirements of ASME BPV Code Section V, Article 4, Mandatory Appendix VIII and

(a) for phased array — ASME Section V, Article 4, Mandatory Appendix V

(b) for time of flight diffraction (TOFD) — ASME Section V, Article 4, Mandatory Appendix III

(3) Procedure qualification shall meet the requirements of ASME Section V, Article 4, Mandatory Appendix IX.

(b) Equipment. A mechanical guided scanner capable of maintaining a fixed and consistent search unit position relative to the weld centerline shall be used.

(c) Personnel

(1) Setup and scanning of welds shall be performed by personnel certified as Level II or III (or by Level I personnel under the direct supervision of Level II personnel).

(2) Interpretation and evaluation of data shall be performed by Level II or III personnel.

(3) Examination personnel shall be qualified and certified following a procedure or program as described in ASME Section V, Article 1, T-120(e), (f), (h), and (i).

(4) Personnel demonstration requirements shall be as stated in ASME Section V, Article 4, Mandatory Appendix VII.

(d) Examination

(1) The initial straight beam scan for reflectors that could interfere with the angle beam examination shall be performed

(a) manually

(b) as part of a previous manufacturing process or

(c) during the weld examination, provided detection of these reflectors is included in the demonstration as required in (a)(3) above

(2) The examination area shall include the volume of the weld, plus the lesser of 25 mm (1.0 in.) or t of adjacent base metal. Alternatively, the examination volume may be reduced to include the actual heat affected zone (HAZ) plus 6 mm (0.25 in.) of base material beyond the heat affected zone on each side of the weld, provided the extent of the weld HAZ is measured and documented.

(3) Scanning may be performed at reference level, provided the procedure qualification was performed at reference level.

(e) Data Recording. Data shall be recorded in the unprocessed form with no thresholding. The data record shall include the complete examination area as specified in (d)(2) above.

(f) Data Analysis

(1) Reflectors exceeding the limits below shall be investigated to determine whether the indication originates from a flaw or is a geometric indication, in accordance with (2) below.

(a) For amplitude-based techniques, the location, amplitude, and extent of all reflectors that produce a response greater than 20% of the reference level shall be investigated.

(b) For non-amplitude-based techniques, the location and extent of all images that have an indicated length greater than 4.0 mm (0.16 in.) shall be investigated.

(2) Ultrasonic indications of geometric and/or metallurgical origin shall be classified as specified in ASME Section V, Article 4, T-481.

(3) Alternatively, other techniques or NDE methods may be used to classify an indication as geometric (e.g., alternative beam angles, radiography). The method employed is for information only to classify the indication as geometric, and ASME B31.3 requirements for

[1] For wall thicknesses less than 25 mm (1.0 in.), the acceptance criteria stated in para. 344.6.2 of B31.3 shall be used.

Copyright © 2015 by the American Society of Mechanical Engineers.
No reproduction may be made of this material without written consent of ASME.

examination techniques are only required to the extent that they are applicable.

(g) Flaw Evaluation

(1) Dimensions. The dimensions of the flaw(s) shall be determined by the rectangle that fully contains the area of the flaw(s). (Refer to Fig. 1.)

(a) The length, ℓ, of the flaw shall be drawn parallel to the inside pressure-retaining surface of the component.

(b) The height, h, of the flaw shall be drawn normal to the inside pressure-retaining surface of the component.

(c) The flaw shall be characterized as a surface or subsurface flaw, as shown in Fig. 1.

(d) A subsurface indication shall be considered as a surface flaw if the separation (S in Fig. 1) of the indication from the nearest surface of the component is equal to or less than half the through-wall dimension [h in Fig. 1, sketch (b)] of the subsurface indication.

(2) Multiple Flaws

(a) Discontinuous flaws that are oriented primarily in parallel planes shall be considered to lie in a single plane if the distance between the adjacent planes is equal to or less than 13 mm (0.50 in.) or $0.5t$, whichever is less.

(b) If the space between two flaws aligned along the axis of weld is less than the height of the flaw of greater height, the two flaws shall be considered a single flaw.

(c) If the space between two flaws aligned in the through-thickness dimension is less than the height of the flaw of greater height, the two flaws shall be considered a single flaw.

(h) Flaw Acceptance Criteria. Flaws shall be evaluated against the applicable acceptance criteria of Table 1 or Table 2, except that flaw length (ℓ) shall not exceed $4t$, regardless of flaw height (h) or the calculated aspect ratio.

Copyright © 2015 by the American Society of Mechanical Engineers.
No reproduction may be made of this material without written consent of ASME.

Fig. 1 Surface and Subsurface Indications

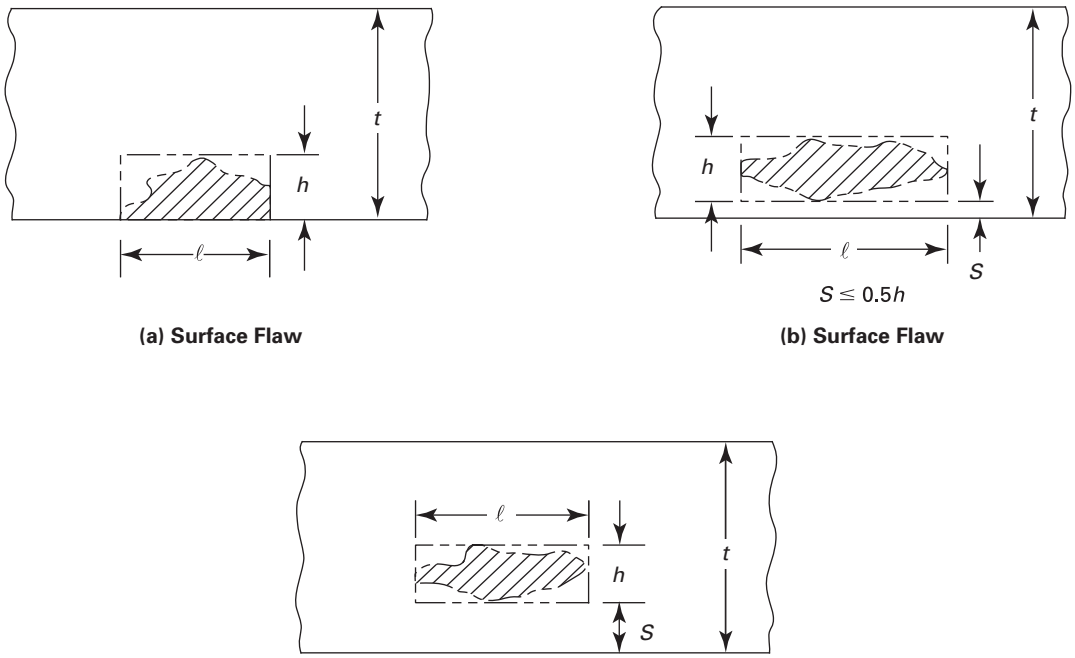

(a) Surface Flaw

(b) Surface Flaw

(c) Subsurface Flaw

Copyright © 2015 by the American Society of Mechanical Engineers.
No reproduction may be made of this material without written consent of ASME.

Table 1 Acceptance Criteria for Surface Flaws

Aspect Ratio, h/ℓ	Maximum h/t for Weld Thickness: 25 mm to 64 mm (1.0 in. to 2.5 in.)	Maximum h/t for Weld Thickness: 100 mm to 300 mm (3.9 in. to 11.8 in.)
0.00	0.031	0.019
0.05	0.033	0.020
0.10	0.036	0.022
0.15	0.041	0.025
0.20	0.047	0.028
0.25	0.055	0.033
0.30	0.064	0.038
0.35	0.074	0.044
0.40	0.083	0.050
0.45	0.085	0.051
0.50	0.087	0.052

GENERAL NOTES:

(a) t = thickness of the weld excluding any allowable reinforcement. For a butt joint joining two members having different thicknesses at the joint, t is the thinner of the two thicknesses joined. If a full penetration weld includes a fillet weld, the effective throat dimension of the fillet weld shall be included in t.

(b) Aspect ratio (h/ℓ) used may be determined by rounding the calculated h/ℓ down to the nearest 0.05 increment value within the column, or by linear interpolation.

(c) For intermediate thickness t [weld thicknesses between 64 mm and 100 mm (2.5 in. and 3.9 in.)], linear interpolation is required to obtain h/t values.

Table 2 Acceptance Criteria for Subsurface Flaws

Aspect Ratio, h/ℓ	Maximum h/t for Weld Thickness: 25 mm to 64 mm (1.0 in. to 2.5 in.)	Maximum h/t for Weld Thickness: 100 mm to 300 mm (3.9 in. to 11.8 in.)
0.00	0.068	0.040
0.10	0.076	0.044
0.20	0.086	0.050
0.30	0.098	0.058
0.40	0.114	0.066
0.50	0.132	0.076
0.60	0.156	0.088
0.70	0.180	0.102
0.80	0.210	0.116
0.90	0.246	0.134
1.00	0.286	0.152

GENERAL NOTES:

(a) t = thickness of the weld excluding any allowable reinforcement. For a butt joint joining two members having different thicknesses at the joint, t is the thinner of the two thicknesses joined. If a full penetration weld includes a fillet weld, the effective throat dimension of the fillet weld shall be included in t.

(b) Aspect ratio (h/ℓ) used may be determined by rounding the calculated h/ℓ down to the nearest 0.05 increment value within the column, or by linear interpolation.

(c) For intermediate thickness t [weld thicknesses between 64 mm and 100 mm (2.5 in. and 3.9 in.)], linear interpolation is required to obtain h/t values.

Copyright © 2015 by the American Society of Mechanical Engineers.
No reproduction may be made of this material without written consent of ASME.

B31 CASE 185
Use of Standard Helium Leak Test for a Vacuum-Only Piping System (Para. 345)

Approval Date: December 22, 2009

Inquiry: Under what circumstances does ASME B31.3 permit the use of helium mass spectrometer leak tests performed under a vacuum as a substitute for the leak test requirements specified in ASME B31.3, para. 345?

Reply: In the opinion of the Committee, the qualified helium leak tests under vacuum conditions in the ASME BPV Code, Section V, Article 10, Appendices V and IX are acceptable substitutes for the testing requirements identified in para. 345 of ASME B31.3, provided the following conditions are met:

(a) The piping system is expected to operate only under vacuum (i.e., subatmospheric pressure) conditions.

(b) Any leakage into the piping system that could result in an internal reaction (e.g., combustion or explosion) that increases the pressure above atmospheric shall be prevented.

(c) All system joints and connections shall be leak tested. Piping welds and joints to be tested shall be uninsulated and exposed, and shall not be primed, painted, or otherwise coated.

(d) Helium leak testing is performed at vacuum conditions sufficient for the mass spectrometer helium leak tests of ASME BPV Code, Section V, Article 10, Appendices V and IX, or at pressures below 10 mbar absolute (less than 1% of atmospheric pressure), whichever is lower.

(e) ASME B31.3, para. 345.2 applies, except for the minimum "10 min" leak test period, the leak test pressure requirements, and the limitation of the need for access for jacketed piping to "visual access." Paragraph 345.3 also applies, except for the leak test pressure requirements. All other inspection, examination, and records requirements of ASME B31.3 Chapter VI must still be satisfied (i.e., paras. 340, 341, 342, 343, 344, and 346).

(f) Written procedures shall be qualified in accordance with ASME BPV Code, Section V, Article 10.

(g) Test personnel shall have training and certification consistent with ASME B31.3, para. 342.

(h) Test reports, including records of personnel qualifications, shall meet the requirements of ASME BPV Code, Section V, Article 10, para. T-1091 and shall be retained for at least 5 yr.

(i) Options of the ASME BPV Code, Section V, Article 10 test methods that allow the engineering design to modify specified requirements of the Appendix V and Appendix IX test methods (such as acceptability limits for system leak tightness) may only be exercised so as to make these requirements more sensitive or more conservative.

(j) The use of the vacuum leak test instead of the pressurized leak test of ASME B31.3, para. 345 shall be specified in the engineering design and shall be accepted by the owner.

Copyright © 2015 by the American Society of Mechanical Engineers.
No reproduction may be made of this material without written consent of ASME.

B31 CASE 188
Minimum Hydrostatic Test Pressure for ASME B31.3, Chapter IX (Para. K345.4.2)

Approval Date: June 9, 2014 (published only on ASME Web page)
Annulment Date: February 27, 2015
Reason for Annulment: Code Case was incorporated into the Code

Copyright © 2015 by the American Society of Mechanical Engineers.
No reproduction may be made of this material without written consent of ASME.

B31 CASE 191
Cu–13Zn–1.1Ni–Si–Al Alloy Seamless Pipe and Tube

Approval Date: January 21, 2015

Inquiry: May precipitation-hardened (temper designation TF00) Cu–13Zn–1.1Ni–Si–Al alloy (UNS No. C69100) seamless pipe and tube conforming to the requirements of ASTM B706-00 (R2011) be used under the rules of ASME B31.3?

Reply: Yes, with the following provisions:

(a) The maximum allowable stress values for the material shall be those given in Table 1.

(b) Welded and brazed construction is not permitted.

(c) The maximum use temperature shall be 204°C (400°F).

(d) Certification to the ASTM B706-00 (R2011) specification requirements shall be mandatory.

Table 1 Maximum Allowable Stress Values

For Metal Temperature Not Exceeding, °C	Stress, MPa	For Metal Temperature Not Exceeding, °F	Stress, ksi
40	138	100	20.0
65	138	150	20.0
100	138	200	20.0
125	138	250	20.0
150	138	300	20.0
175	137	350	19.9
200	135	400	19.5
225 [Note (1)]	132	. . .	. . .

NOTE:

(1) The maximum use temperature for this alloy is 204°C (400°F). The value listed at 225°C is provided for interpolation purposes only.

Copyright © 2015 by the American Society of Mechanical Engineers.
No reproduction may be made of this material without written consent of ASME.

B31 CASE 193
Cu–5.5Zn–4Si Casting Alloy UNS No. C87600

Approval Date: October 9, 2014

Inquiry: May Cu–5.5Zn–4Si casting alloy UNS No. C87600 conforming to the requirements of ASTM B584 be used for construction under the rules of ASME B31.3?

Reply: Yes, with the following provisions:

(a) The basic allowable stress values for the material shall be those given in Table 1. A casting quality factor, E_c, needs to be applied.

(b) The maximum use temperature shall be 177°C (350°F).

(d) Separate weld procedure and performance qualifications shall apply to this material. The welding procedure qualifications shall be in accordance with ASME Section IX.

Table 1 Basic Allowable Stress Values

For Metal Temperature Not Exceeding, °C	Stress, MPa	For Metal Temperature Not Exceeding, °F	Stress, ksi
40	138	100	20.0
65	138	150	20.0
100	138	200	20.0
125	138	250	20.0
150	138	300	20.0
175	138	350	20.0
200 [Note (1)]	137	. . .	. . .

NOTE:
(1) The maximum use temperature for this alloy is 177°C (350°F). The value listed at 200°C is provided for interpolation purposes only.

Copyright © 2015 by the American Society of Mechanical Engineers.
No reproduction may be made of this material without written consent of ASME.

Copyright © 2015 by the American Society of Mechanical Engineers.
No reproduction may be made of this material without written consent of ASME.

ASME B31.3-2014

ISBN 978-0-7918-6939-0

9 780791 869390

A03714