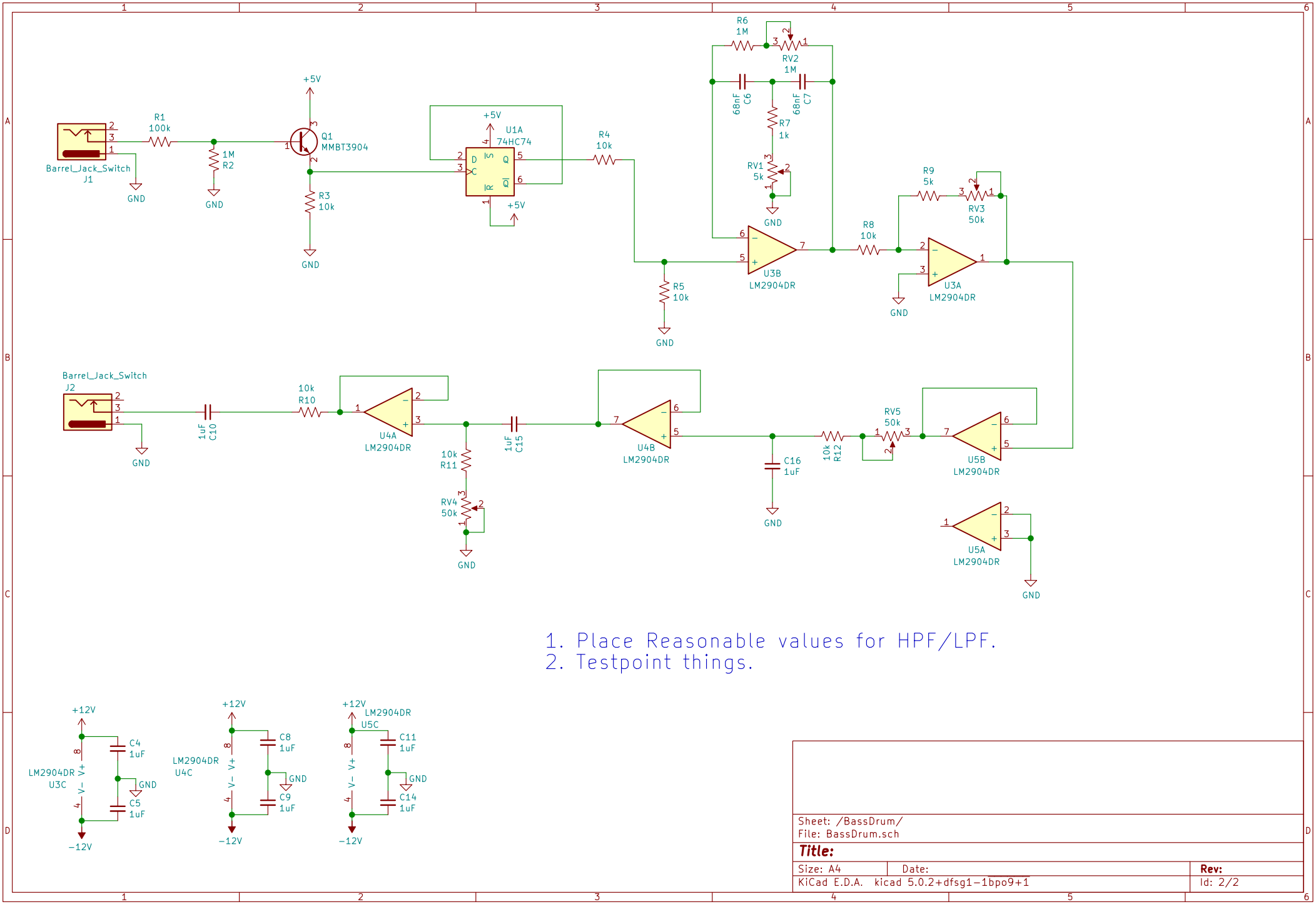

Sheet: /BassDrum/
File: BassDrum.sch

Title:

Size: A4	Date:	**Rev:**
KiCad E.D.A. kicad 5.0.2+dfsg1-1bpo9+1		Id: 2/2