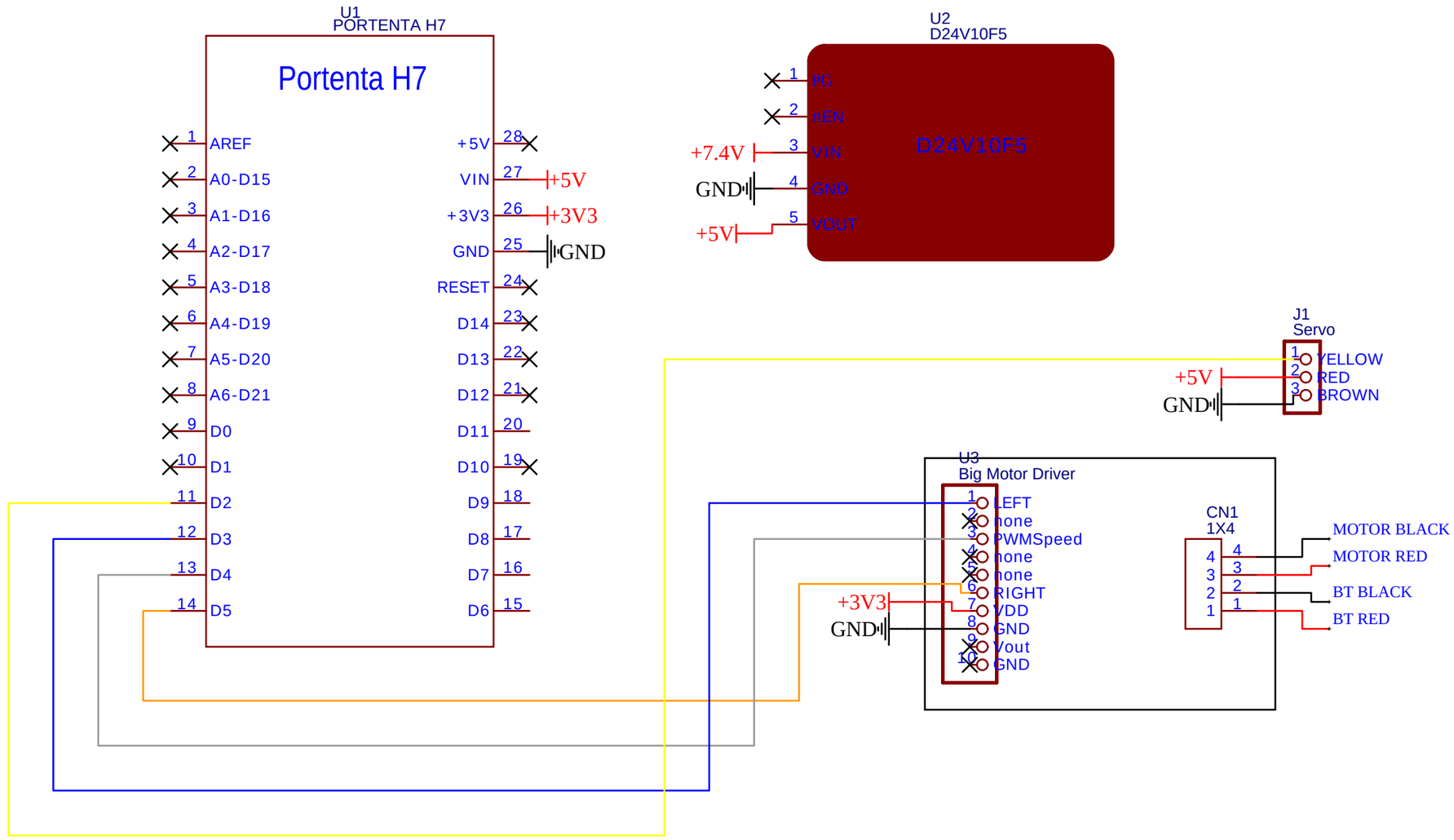

TITLE: PORTENTA ML CAR WIRE UP		REV: 1.0
EasyEDA	Company: GEARBOTS	Sheet: 1/1
	Date: 2022-02-24 Drawn By: Darth_Vader96	