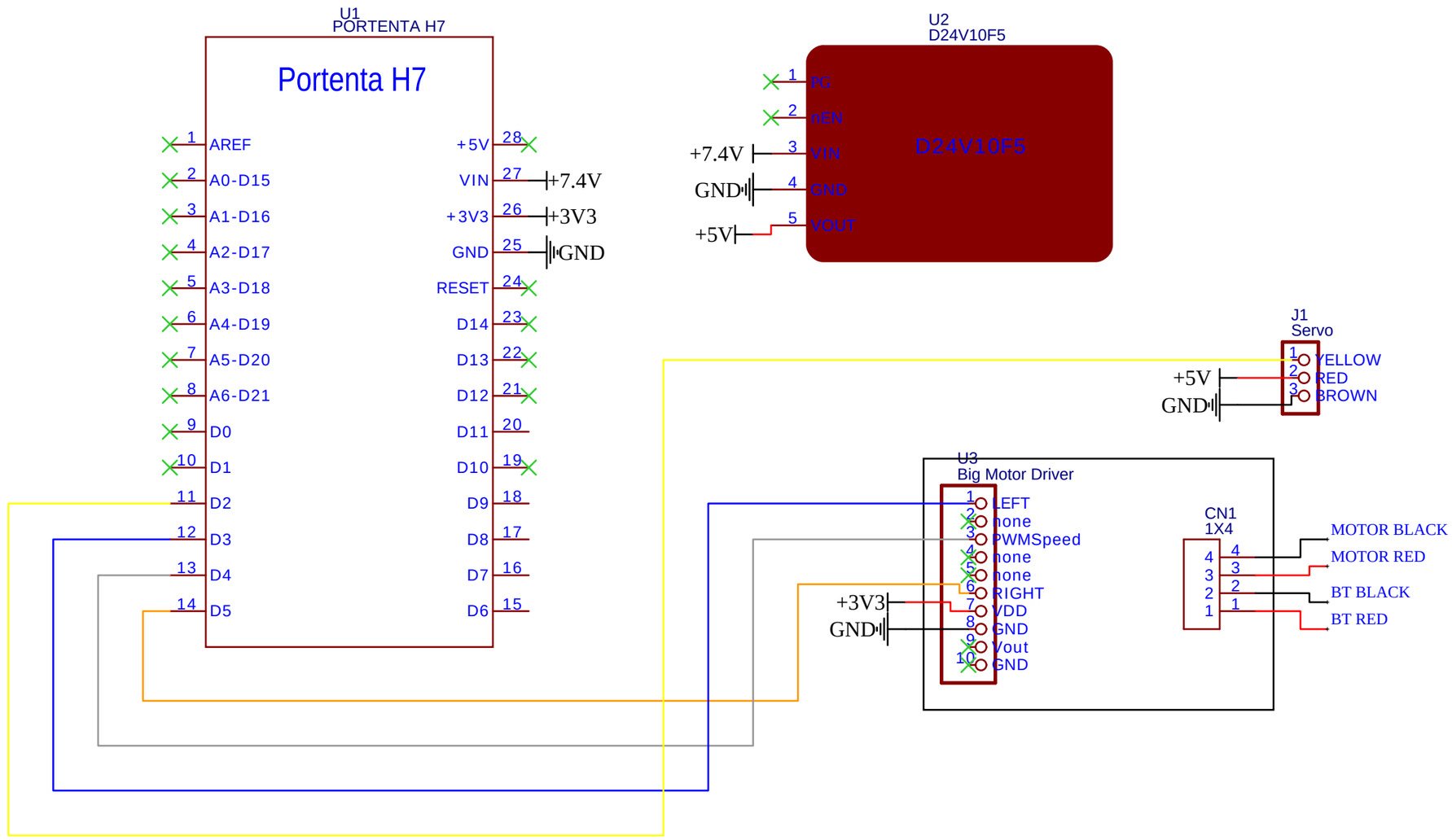

TITLE: PORTENTA ML CAR WIRE UP

REV: 1.0

Company: GEARBOTS

Sheet: 1/1

Date: 2022-02-24

Drawn By: Darth_Vader96