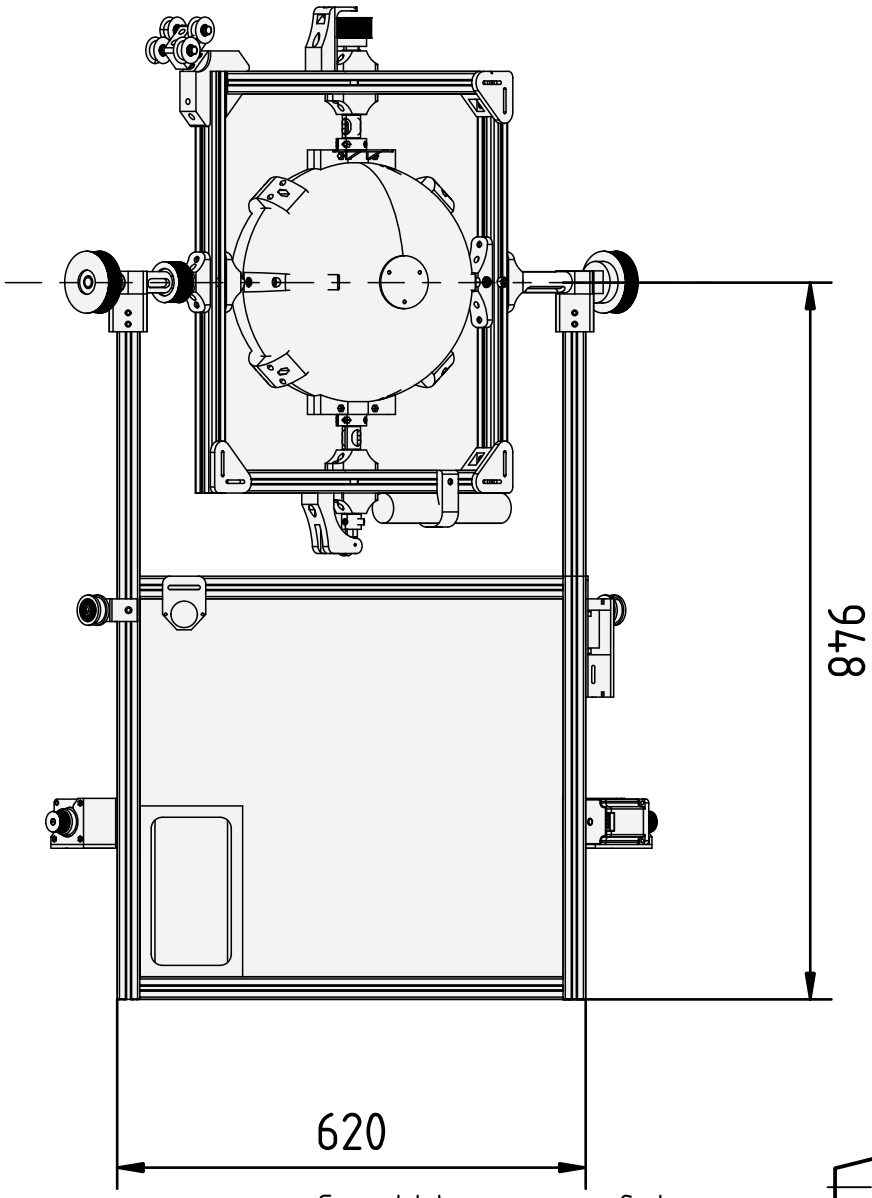

Part Material:
-

General tolerances:
ISO 2768-m

Scale:
1 : 10

Title: Clinostat	Created by: M. Malczyk		Owner:	
Document type: Assembly Drawing	Approved by: M. Malczyk			
Drawing number: DN	Language: EN	Issue date: 12.04.2026	Revision: AAA	Sheet: 1 / 1

A4