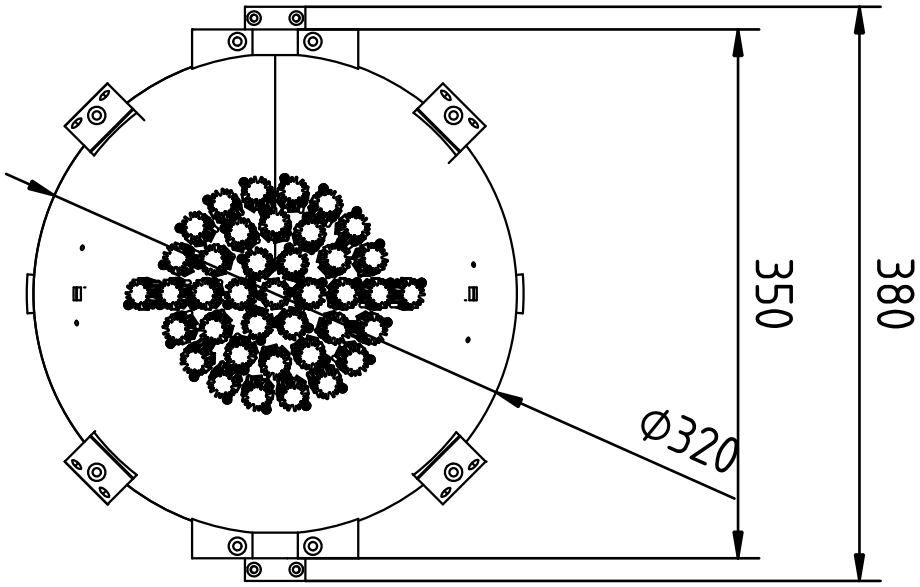

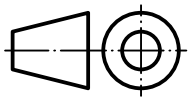

Part Material: -	General tolerances: ISO 2768-m	Scale: 1 : 5		
Title: Cultivation	Created by: M. Malczyk		Owner:	
Document type: Component Drawing	Approved by: M. Malczyk			
Drawing number: DN	Language: EN	Issue date: 10.04.2026	Revision: AAA	Sheet: 1 / 1

A4