Compact Enclosures CES-105

Low Height - Rail / Wall Mount

For Home / Building Automation
For RASPBERRY PI - ARDUINO - BEAGLEBONE – ODROID type Popular Embedded electronic boards

Compact Enclosures CES-105 - a versatile, compact enclosure is ideal for housing Home – Building Automation and for mounting similar to Popular Embedded electronic boards (RASPBERRY PI - ARDUINO - BEAGLEBONE – ODROID) Compact Enclosures offers wide designing option with three ways in PCB mounting and with customer specific solution in termination / connectors. Enclosure is having wall as well as DIN rail mounting facility. Modular enclosure offers packaging to wide range of applications from Instrumentation, automotive industry to home/building automation. Typical applications are PLC, Multiple Relays, Multiple Timers, Transducers, Transmitters, Thermostat, Sensing and Monitoring Devices.

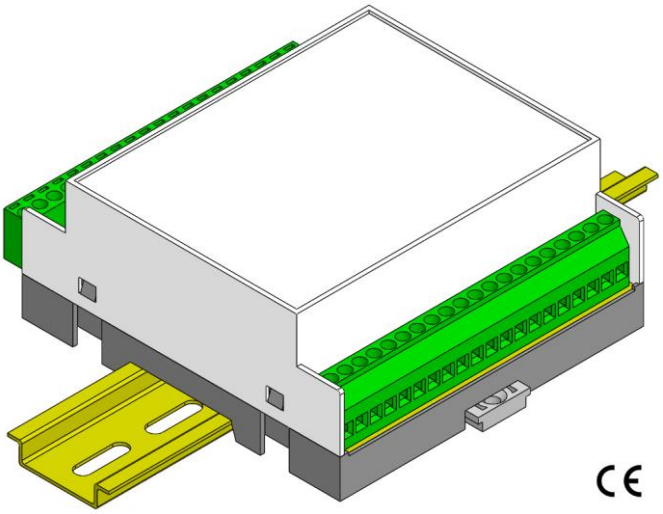

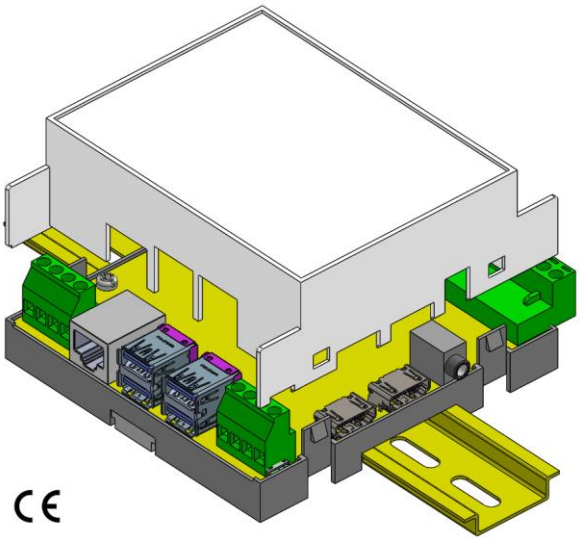

Features

- Low Height Enclosure for Compact Instruments
- For RASPBERRY PI - ARDUINO BEAGLEBONE – ODROID type Popular Embedded electronic boards
- Dimensional size per DIN 43 880 - Can be mounted with Distribution system along with MCB
- Snap-together design speeds up assembly.
- One Base PCB fixed on Base Plate
- Innovative Clips design facilitates Wall / Rail Mount to Enclosures by changing its position in Base plate.
- Max. 40 (20+20) Terminal – standard 5mm pitch fixed OR Plug-In type.
- Protection - IP20 (finger protected) Protection against accidental contact
- Terminals are optional – Enclosure supplied with / without terminals - customer can use standard commercial terminal available of their choice

Custom Opening / Cut Out for Different Connectors

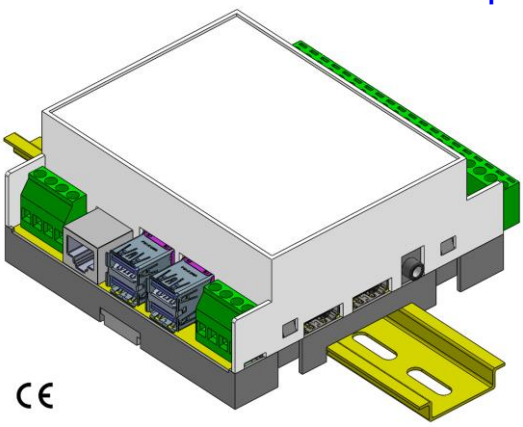

Enclosure Top Cover is a closed cover. The openings needed for Connectors used in Popular Embedded electronic boards such as RASPBERRY PI - ARDUINO - BEAGLEBONE – ODROID are made on sides. This feature gives enclosure tailored made enclosure look. Opening for Different Connectors can be made are as follows.

- Ethernet Port
- USB Port
- Dual USB Port
- Micro USB
- HDMI Port
- Micro SD Card Slot
- RJ45
- Audio Jack

Case Parts

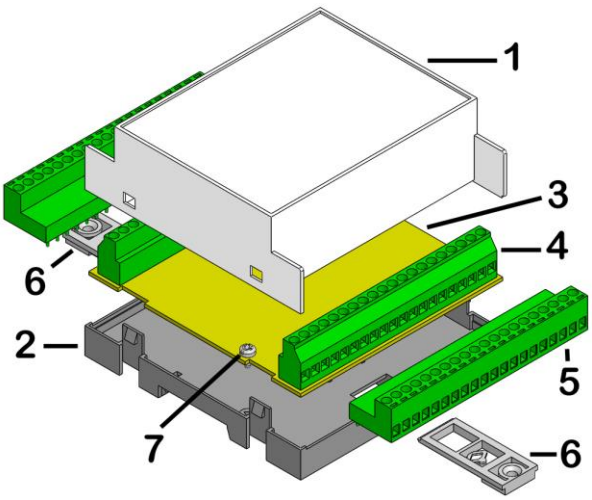

1. Case Top cover
2. Base Plate
3. Base PCB
4. Fix Terminal
5. Plug-In Terminals
6. Mounting Clips
7. Screws

Material :
Cover : ABS
Polycarbonate (FR - UL94V-0)
Base : ABS
Noryl (FR - UL94V-0)

Color :
Cover : White
Base: Black

Ordering Information	
CES-105-01	Case complete without Terminals
CES-105-02	Case complete with 40 fixed Terminals
CES-105-03	Case complete with 40 Plug-In Terminals
CESC-105	Top Cover standard – Fixed Terminals
MDB-105	Base plate with clips
CESP-105	Base PCB (For initial prototype making)

Detail Drawing

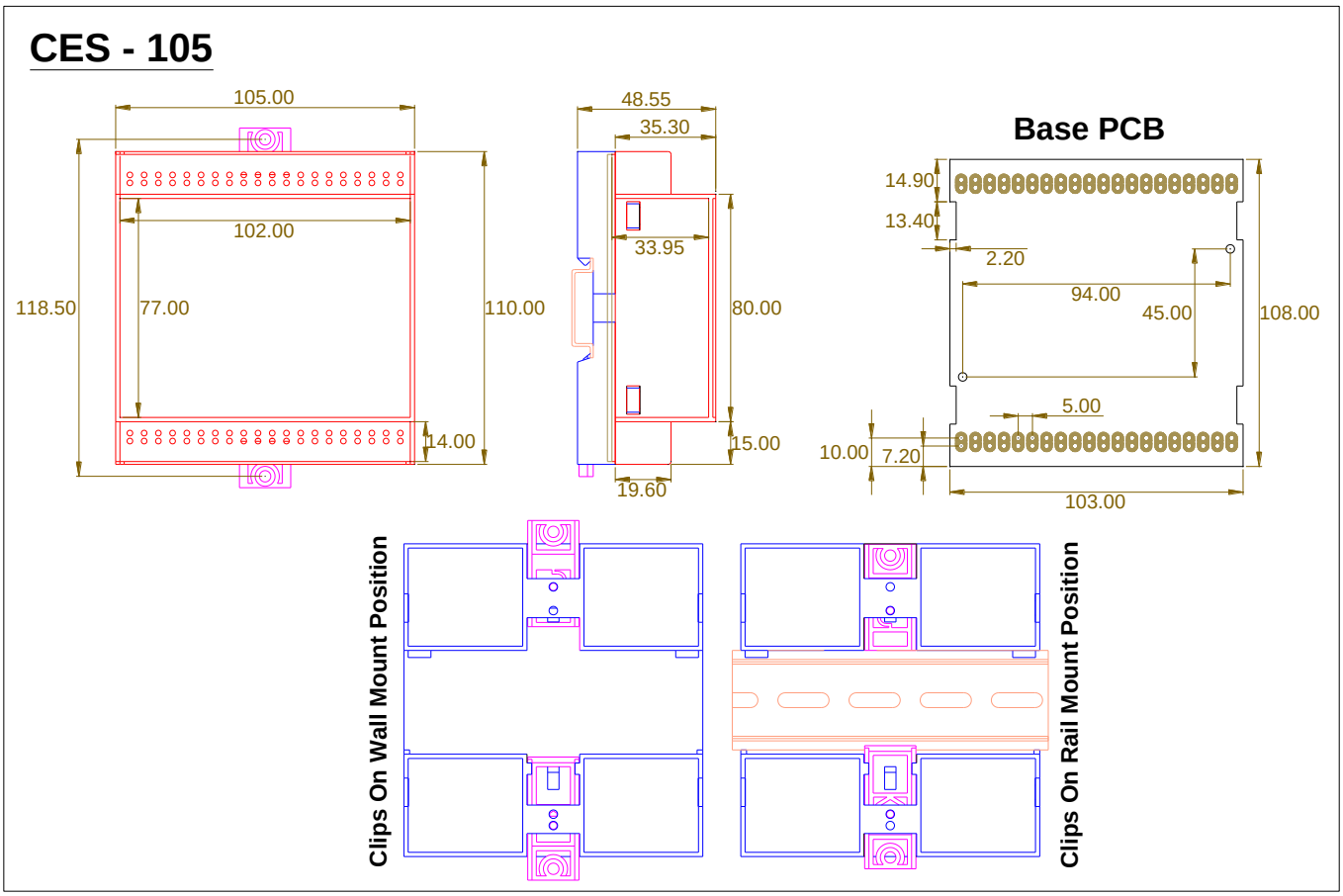

Page contains 3D views of Product, It can be view in latest free Acrobat Reader / Acrobat Pro

Compact Din Rail Enclosures

CES-105

CES-105-01

CES-105-02

CES-105-03