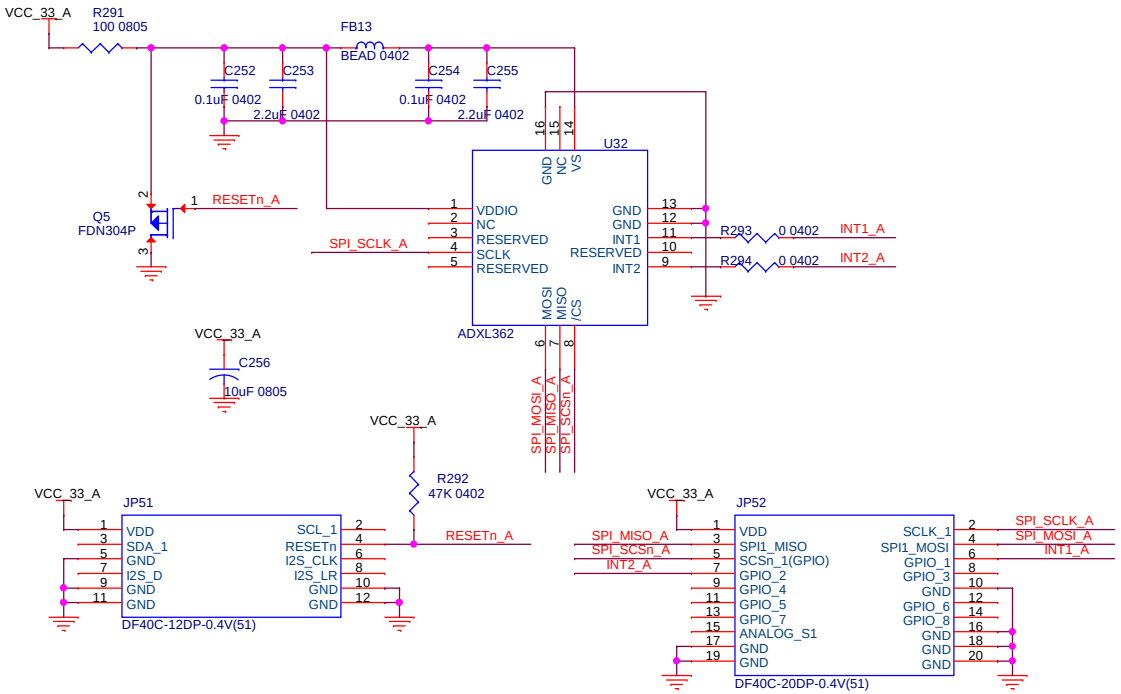

Title	<Title>	
Size B	Document Number <Doc>	Rev <RevCode>
Date: Monday, December 07, 2020	Sheet 1 of 1	