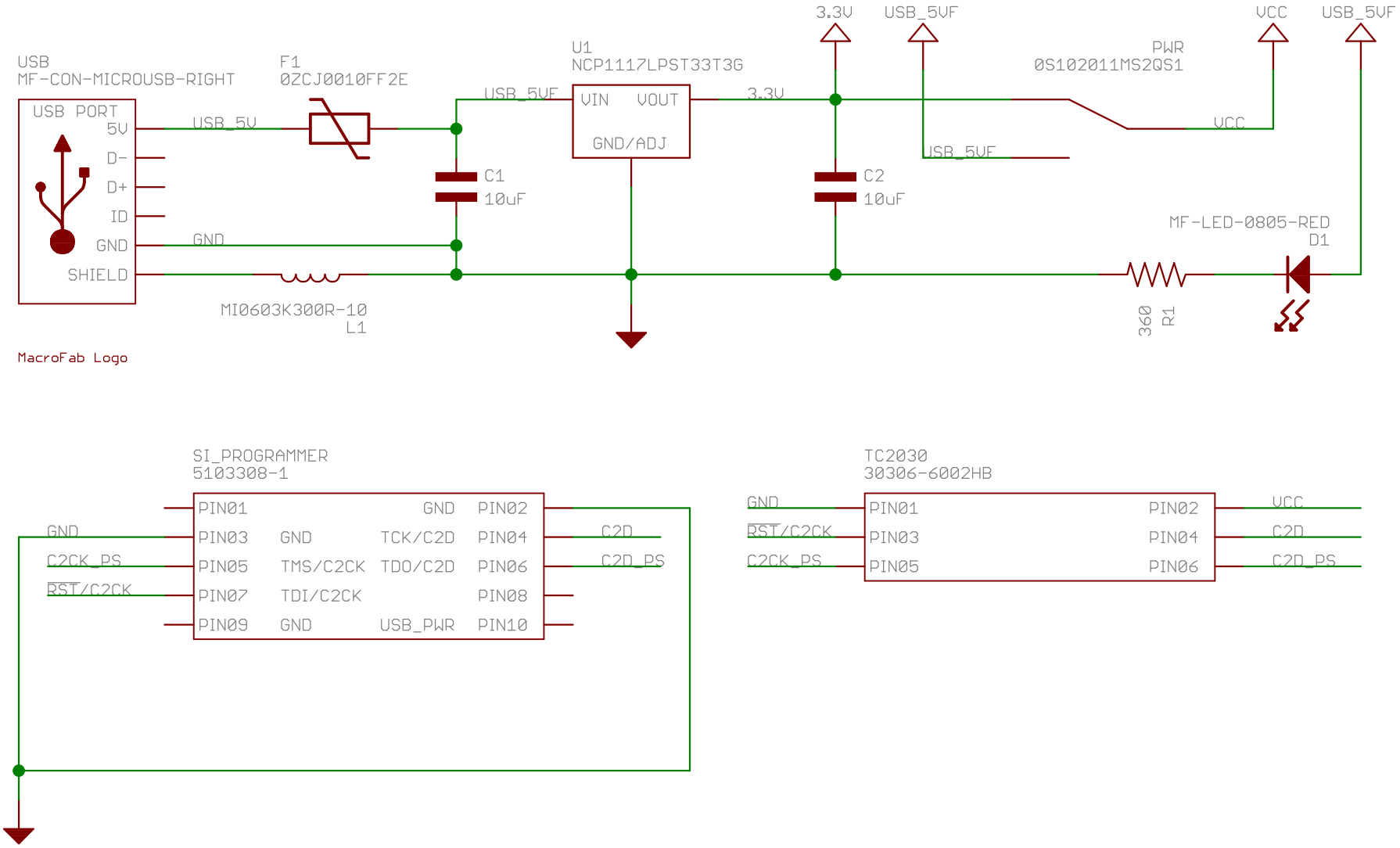

MacroFab, Inc

TITLE: SiLabs2TC

REV: 2

DESIGNER: Parker Dillmann

Date: 9/13/2016 2:37 PM

Sheet: 1/1