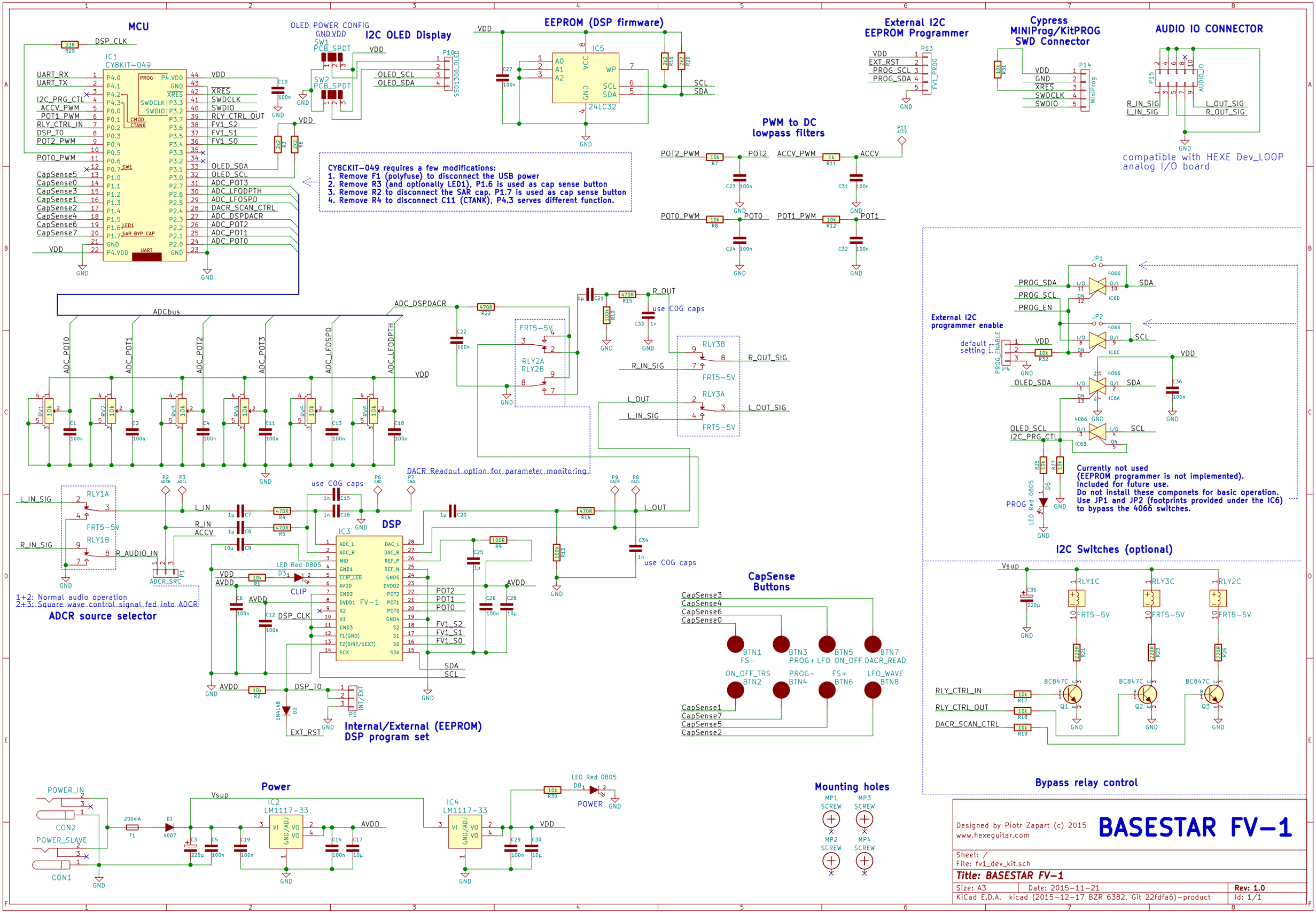
MCU
IC1
CY8KIT-049
I2C OLED Display
OLED POWER CONFIG
EEPROM (DSP firmware)
IC5
24LC32
External I2C EEPROM Programmer
Cypress MINIProg/KitPROG SWD Connector
AUDIO IO CONNECTOR
compatible with HEXE Dev_LOOP analog I/O board
PWM to DC lowpass filters
CY8CKIT-049 requires a few modifications:
1. Remove F1 (polyfuse) to disconnect the USB power
2. Remove R3 (and optionally LED1). P1.6 is used as cap sense button
3. Remove R2 to disconnect the SAR cap. P1.7 is used as cap sense button
4. Remove R4 to disconnect C11 (CTANK), P4.3 serves different function.
ADCbus
DACR Readout option for parameter monitoring
use C0G caps
DSP
IC3
FV-1
ADCR source selector
1+2: Normal audio operation
2+3: Square wave control signal fed into ADCR
Internal/External (EEPROM) DSP program set
CapSense Buttons
External I2C programmer enable
default setting
Currently not used
(EEPROM programmer is not implemented).
Included for future use.
Do not install these componets for basic operation.
Use JP1 and JP2 (footprints provided under the IC6)
to bypass the 4066 switches.
I2C Switches (optional)
Bypass relay control
Power
IC2 LM1117-33
IC4 LM1117-33
Mounting holes
Designed by Piotr Zapart (c) 2015
www.hexeguitar.com
BASESTAR FV-1
Sheet: /
File: fv1_dev_kit.sch
Title: BASESTAR FV-1
Size: A3
Date: 2015-11-21
Rev: 1.0
KiCad E.D.A. kicad (2015-12-17 BZR 6382, Git 22fdfa6)-product
Id: 1/1