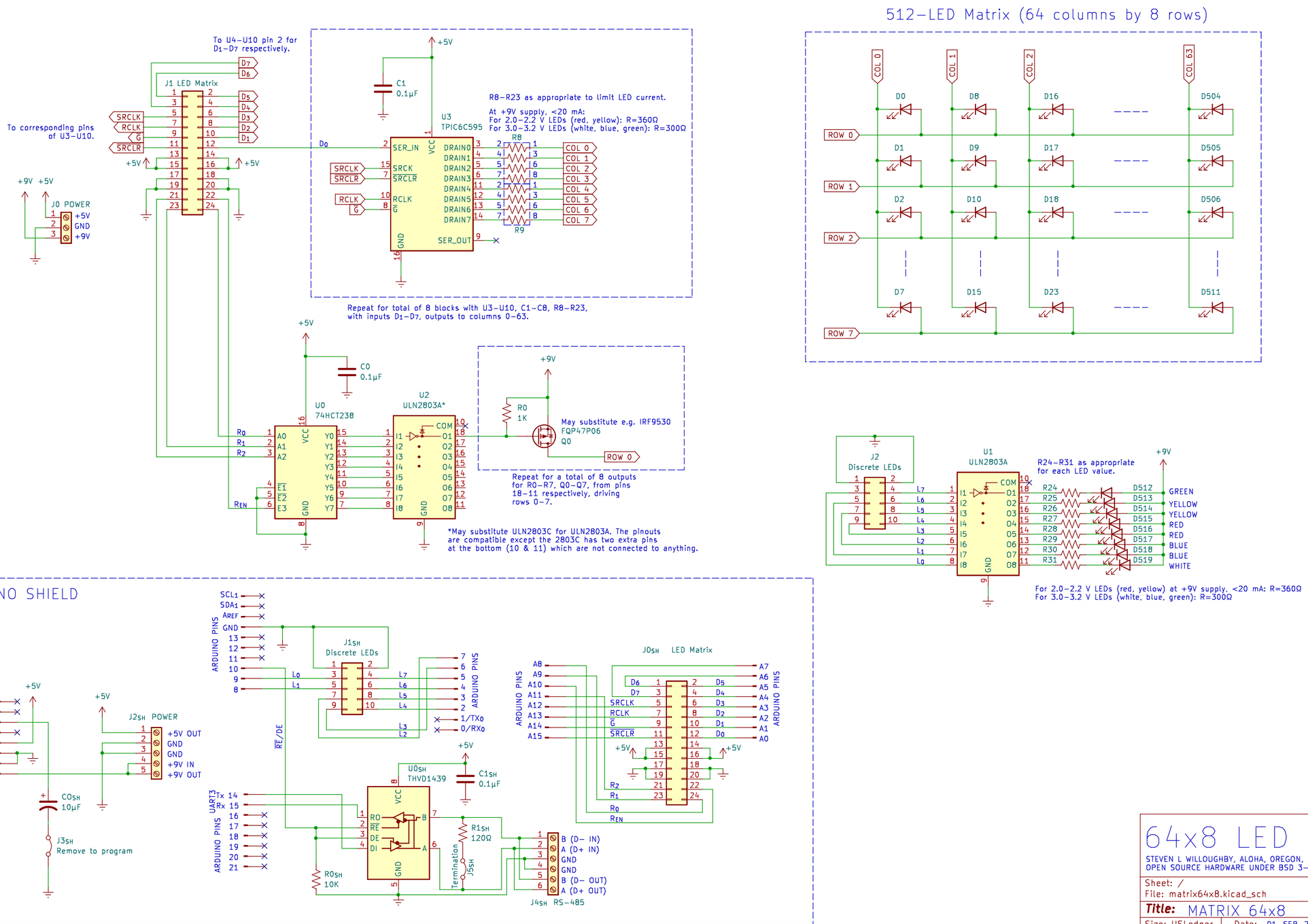

64x8 LED MATRIX

STEVEN L WILLOUGHBY, ALOHA, OREGON, USA © 2023
OPEN SOURCE HARDWARE UNDER BSD 3-CLAUSE LICENSE

Sheet: /	
File: matrix64x8.kicad_sch	
Title: MATRIX 64x8	
Size: USLedger Date: 01-SEP-2023	**Rev:** 2.0.0
KiCad E.D.A. eeschema 7.0.7	Id: 1/1