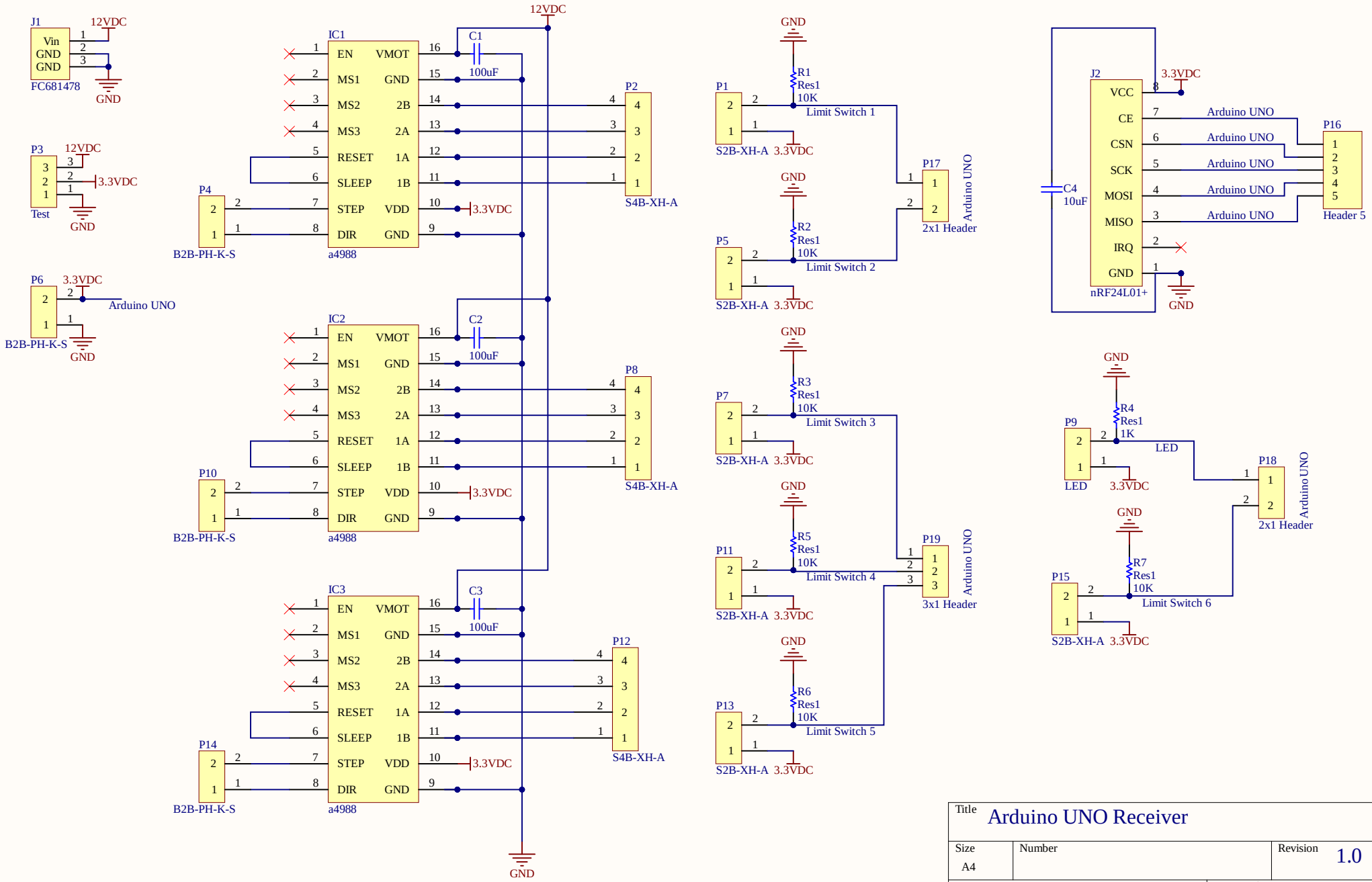

Title	Arduino UNO Receiver	
Size A4	Number	Revision 1.0
Date: 10/07/2020		Sheet of
File: \\..\theMonarchTransmitter.SchDoc		Drawn By: Madison Beare