KELVIN KARANI NJOROGE

PCB DESIGN CHALLENGE

COMPLETE KICAD DESIGN FILES UPLOADED TO THE BELOW GITHUB REPOSITORY

https://github.com/madfury0/octavia-carbon-challenge

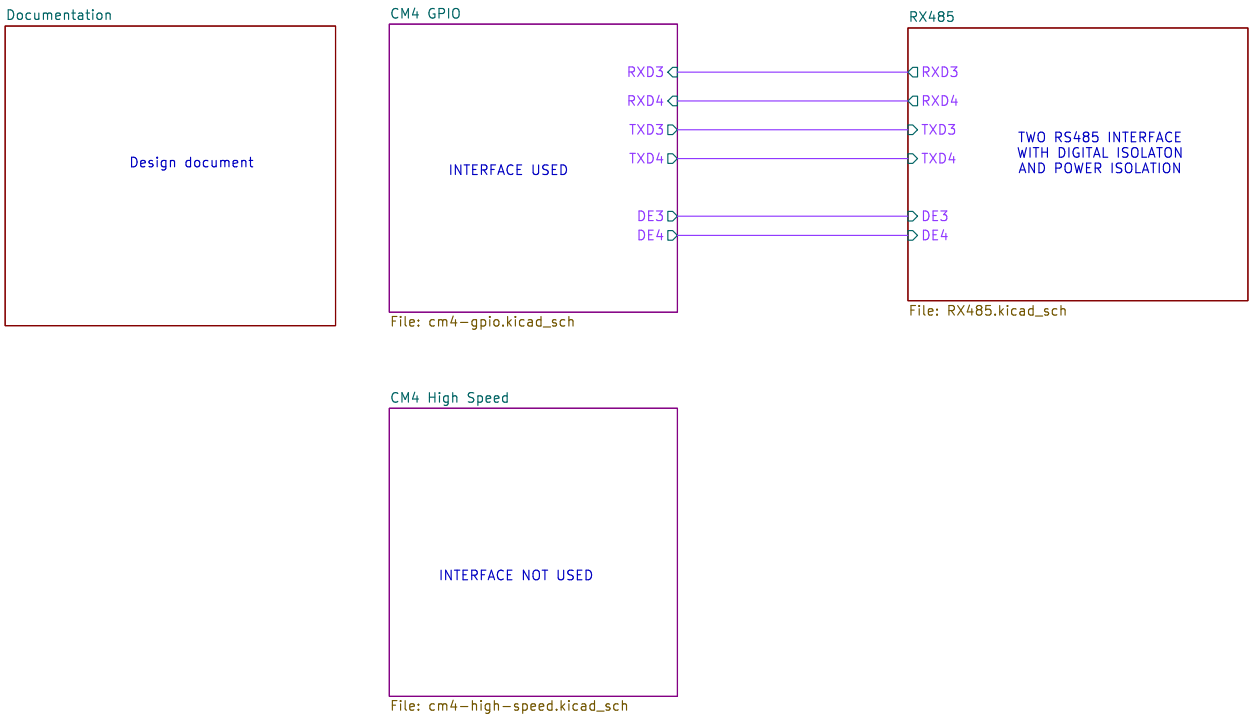

Author: Kelvin Karani		
Sheet: / File: rpi-cm4-board.kicad_sch		
Title: CM4 Carrier Board		
Size: A4	Date: 2026-03-15	**Rev: v1**
KiCad E.D.A. 9.0.7		Id: 1/5

HARDWARE DESIGN

1. SINGLE PORT MAGJACK

The chosen rj45 has magnetics built in to reduce pcb footprint size
Its a single port 10/100 rj45 capable of data transfer of upto 1Gps

2. ISOW7741 Digital isolator IC

ISOW7741 digital isolator has both data isolation and power isolation to ensure complete isolationof the rs485 interface
It is being used to isolate the cm4 uart and the rs485 transceiver

3. THVD1450DR RS485 transceiver IC

This is the rs485 transceiver ic that is used to provide the rs485 differential lines from the uart.
It has to enable pins that are tied to a gpio pin which will determine if it is sending or receiving data as it is implemented in half duplex mode

4. Power supply

As one of the requirement was to be able to operate at 12 to 24VDC, R1500H LDO was picked as it provides a voltage input range of 4VDC to 24VDC with a minimum current supply of 0.5A thus meeting the requirement
The output voltage is a fixed 5V as required by the cm4 module

5. SD Card

This provides a means to load the raspberry pi OS if the cm4 board in use does not have a eMMC
It is recommended in the cm4 datasheet

6. Header

This is a 15 pin header pin provding access to uart, spi, i2c and the power pins – as this was one of the requirement of the challenge

7. I2C pull up network

As the cm4 datasheet indicates that i2c 0 has internal pullup of 1.8K, the board provides a way to add pull up resistors(DNP) on the schematic if the user requires a different i2c speed

8. RS485 termination resistors

The design provides 0K resistors at the A and B lines thus providing flexibility of adding different value termination resistors if need be.

9. TVS diode has been used to provide overvoltage and surge protection

PCB LAYOUT AND ROUTING

The design includes a 4 layer board with the following stackup: Signal, Ground, Signal + Power, ground
This ensures all the traces have proper reference plane, L1 reference L2 and L3 reference L4.
All the grounds and 3.3V power are uncut planes thus ensure proper SI and reduces EMI from cuts.

RS485 standard dictates A and B are differential pairs and should routed with 120 ohms differential impendance and ethernet standard dictates the differential pairs should be routed with 100 ohms differential impendance.
Both standards have been followed by using kicad's inbuilt calculator to get the required width and separation gap.
Meadering has been used to achieved precise length matching on the different differential pairs as stipulated by the standard

The pcb layout has followed the recommended layout provided by the different datasheets.
Tracks have enough separation to minimize crosstalk and improve signal integrity
Thermal reliefs are used on the different copper pours.

Softaware test

A python script will be used to test the different interfaces.
The program will ping the ethernent and check if host is up, hence verifying the ethernet
Send a "hello world" over uart to a pc connected via a uart to ttl converter hence verify uart
for i2c, a simple loop that loops all the 7 bit address space and returns the address of the device connected should work.
for spi, a sensor sending data over spi can be used to verify spi is cable of receiving data and also send data over to the sensor.

Signal ringing on high speed lines might be an ensure but probing with an oscilloscope can be used to check

Author: Kelvin Karani

Sheet: /Documentation/
File: doc.kicad_sch

Title: Documentation

Size: A4 | Date: 2026-03-19 | Rev:
KiCad E.D.A. 9.0.7 | Id: 1/5

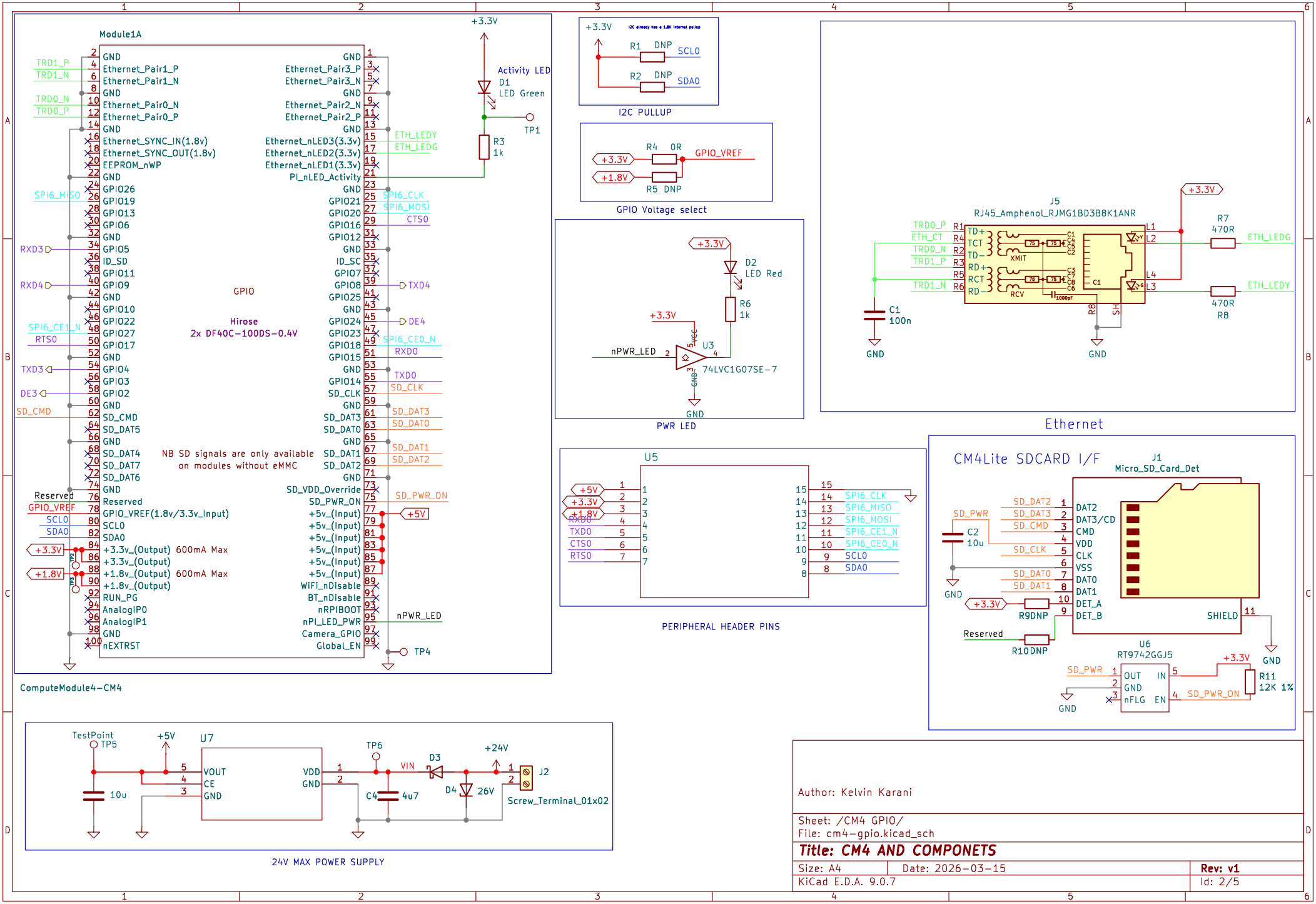
Module1A
GPIO
Hirose
2x DF40C-100DS-0.4V
NB SD signals are only available on modules without eMMC
ComputeModule4-CM4
Activity LED
D1
LED Green
R3
1k
TP1
TP4
I2C PULLUP
I2C already has a 1.8K internal pullup
R1 DNP SCL0
R2 DNP SDA0
GPIO Voltage select
R4 0R GPIO_VREF
R5 DNP
PWR LED
D2
LED Red
R6
1k
U3
74LVC1G07SE-7
nPWR_LED
PERIPHERAL HEADER PINS
U5
Ethernet
J5
RJ45_Amphenol_RJMG1BD3B8K1ANR
XMIT
RCV
R7
470R
R8
470R
C1
100n
CM4Lite SDCARD I/F
J1
Micro_SD_Card_Det
C2
10u
R9DNP
R10DNP
U6
RT9742GGJ5
R11
12K 1%
24V MAX POWER SUPPLY
U7
TestPoint
TP5
TP6
D3
D4
26V
C4
4u7
J2
Screw_Terminal_01x02
Author: Kelvin Karani
Sheet: /CM4 GPIO/
File: cm4-gpio.kicad_sch
Title: CM4 AND COMPONETS
Size: A4
Date: 2026-03-15
Rev: v1
KiCad E.D.A. 9.0.7
Id: 2/5

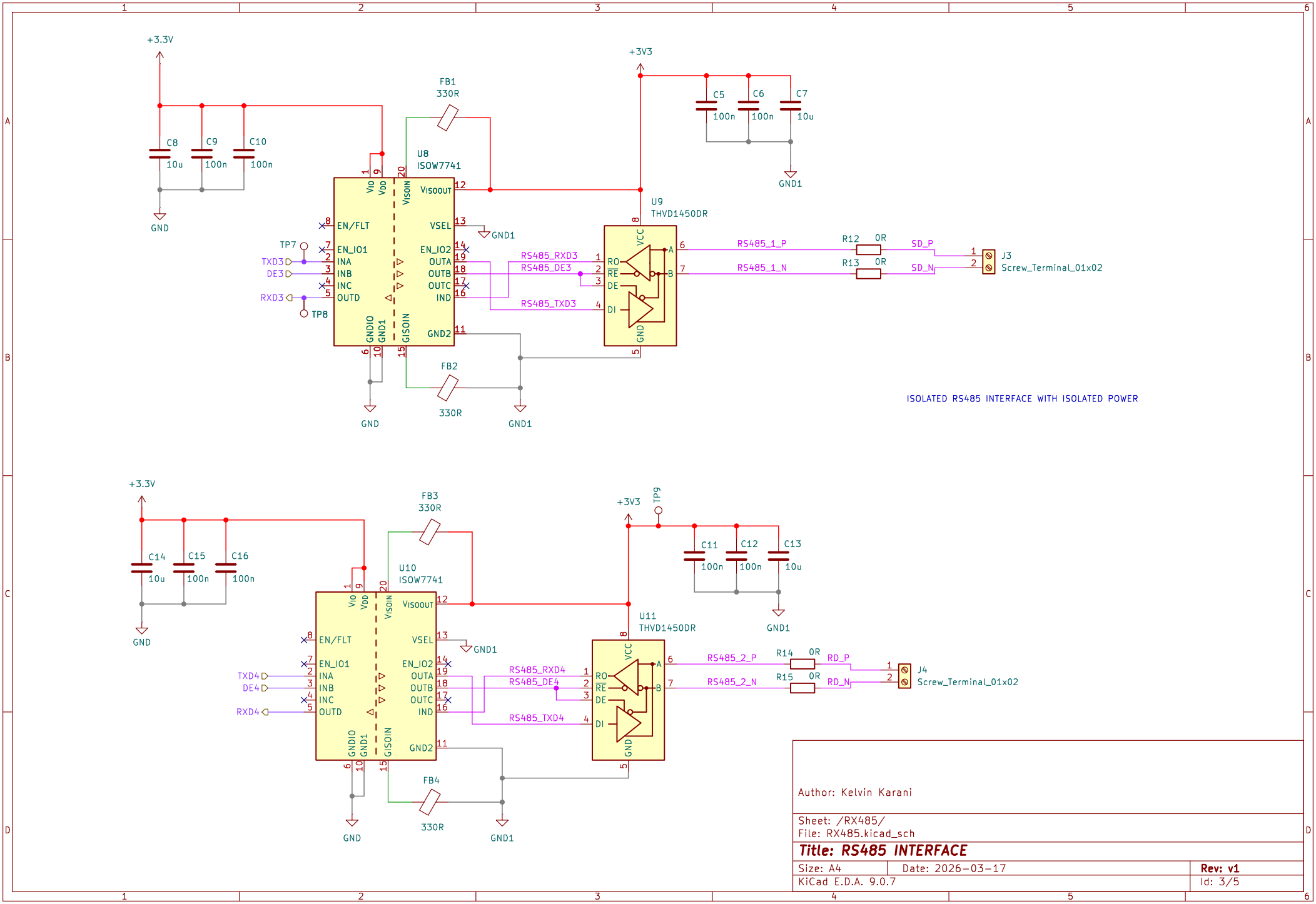

Author: Kelvin Karani

Sheet: /RX485/
File: RX485.kicad_sch

Title: RS485 INTERFACE

Size: A4	Date: 2026-03-17	Rev: v1
KiCad E.D.A. 9.0.7		Id: 3/5

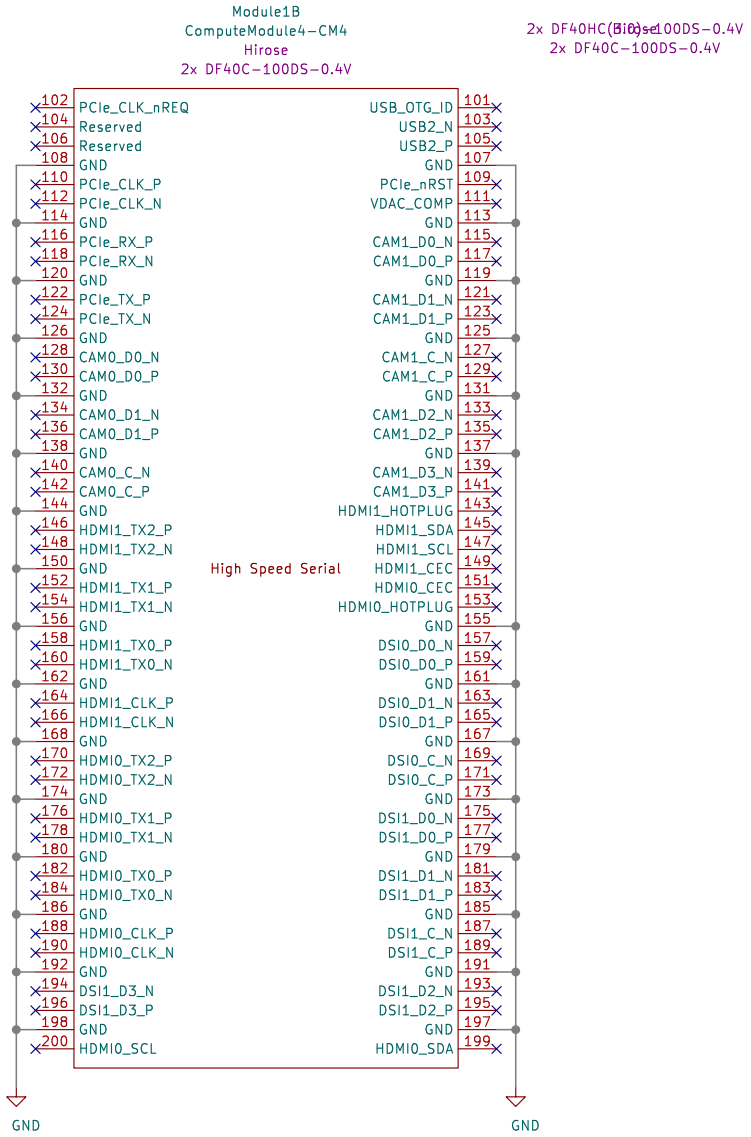

Author: Kelvin Karani

Sheet: /CM4 High Speed/
File: cm4-high-speed.kicad_sch

Title: CM4 HIGHSPEED SIDE

Size: A4	Date: 2026-03-15	**Rev: v1**
KiCad E.D.A. 9.0.7		Id: 4/5