Analog IC Design : Course Project, Spring 2026

(Instructor: Prof. Abhishek Srivastava, CVEST, IIIT Hyderabad)
Due date: 5-May-2026, 6 pm

Instructions:

1. Submit your project report as a single PDF named `Name_RollNo.pdf` on Moodle before the due date.
2. Hand-written/typed (LaTeX/Word) submissions are allowed. Reports must be self-contained and reproducible.
3. Use the provided SCL 180 nm technology models in Cadence Virtuoso for all simulations.
4. Include your name and roll number on the title page and within each plot file (use `Name_RollNo_FigureX` naming).
5. The report must include complete schematics, netlists, annotated waveforms, hand calculations, and a discussion of results.

Design of a Programmable Gain Amplifier Using a Fully Differential OTA with 5T OTA-Based CMFB and DC Offset Cancellation

1 Project Overview

The objective is to design a fully differential operational transconductance amplifier (OTA) and use it as the core building block of a programmable gain amplifier (PGA). The OTA includes an active common-mode feedback (CMFB) implemented using a 5-transistor OTA. A DC offset cancellation (DCOC) loop is included to remove low-frequency offset and prevent saturation at high gains.

1.1 Proposed architecture

The system contains:

- Fully differential OTA (primary amplifying block:- 5T-OTA or folded cascode structures can be used)

- 5T-OTA based continuous-time CMFB
- Programmable feedback network (switchable resistor ladder / MOS switches)
- DC offset cancellation (low-frequency integrator/auto-zero/chopper path)

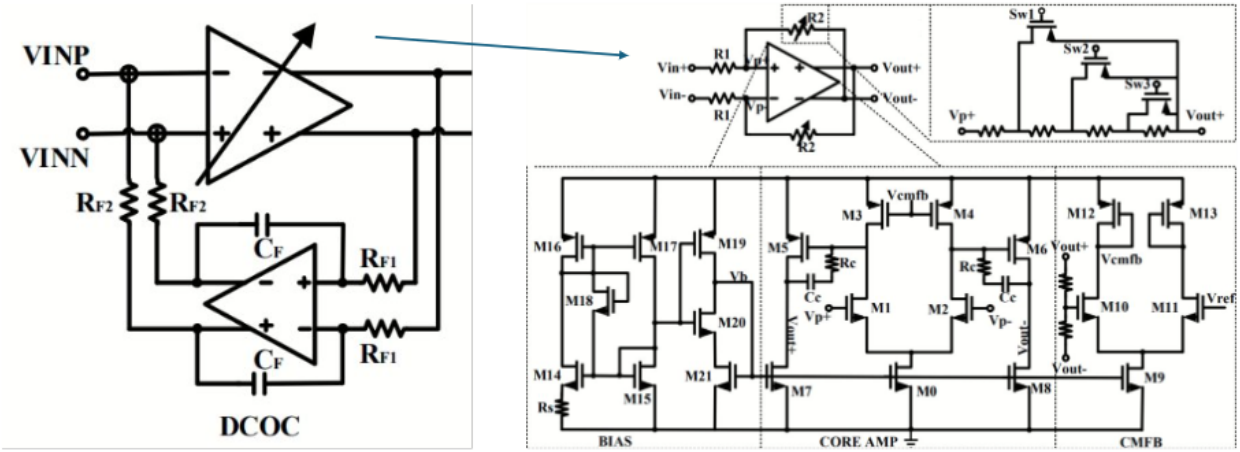

Figure 1: Block diagram of the proposed PGA (5T OTA + CMFB + DCOC) and Its implementation [7].

- Please Refer

  Fig.4-5 [4] and Fig.1 [7] for Block level schematic of PGA and DC offset cancellation scheme

  Fig.2 [7] 5T OTA based PGA implementation

  Fig.9 [5] Folded cascode based PGA implementation

  Fig.7 [6] series-shunt feedback around an opamp implementation of PGA

  Chapter 9 of [2] for fully differential amplifier architectures and common-mode feedback (CMFB)

2 Design specifications

2.1 OTA (primary) specifications

Parameter	Target
Technology	SCL 180 nm CMOS
Supply voltage	1.8 V
Output load capacitance C_L	1 pF
DC open-loop gain	≥ 70 dB
-3dB bandwidth	≥ 7.5 MHz
Phase margin	50°–80°
CMRR	≥ 80 dB
PSRR	≥ 65 dB
Slew rate	$\geq 20\,\mathrm{V}/\mu\mathrm{s}$
Settling time (2%)	≤ 200 ns
Total OTA + CMFB power	≤ 1 mW
Input-referred noise	$\leq 35\,\mathrm{nV}/\sqrt{\mathrm{Hz}}$ @ 1 kHz
Output DC offset after cancellation	≤ 10 mV

2.2 PGA specifications

Parameter	Target
Closed-loop gain range (dB)	10 dB – 50 dB
-3dB Bandwidth for 50 dB gain	≥ 15 MHz
Gain error	$\leq 5\%$
Total power (including DCOC)	< 1.5 mW

3 Hand calculations and deliverables

Estimate transistor sizing and bias currents and present detailed hand calculations. Provide a dedicated subsection in the report showing full derivations and numeric results.

(4a) **Required transconductance:** Calculate required g_m to meet the UGB target using

$$\mathrm{UGB} \approx \frac{g_m}{2\pi C_L}.$$

Show algebra, numerical substitution, and assumptions (e.g., chosen V_{ov}).

(4b) **Bias current for the differential pair:** Using

$$g_m \approx \frac{2I_D}{V_{ov}},$$

compute I_D and total tail current. Show W/L assumptions.

(4c) **Open-loop gain estimate:** Estimate $A_{OL} \approx g_m r_o$ (or augmented forms if cascoding or active load is used). Provide r_o estimates from channel-length modulation assumptions ($r_o \approx 1/(\lambda I_D)$).

(4d) **CMFB loop bias calculations:** Compute required transconductance and bias current for the CMFB OTA such that CMFB loop gain target (see Sec. 5) is met.

(4e) **Offset cancellation filter sizing:** Choose $R_{OC}C_{OC}$ (or integrator constant) to set high-pass cutoff f_{HP} (recommend 1–10 kHz). Show time-constant calculation and justify the tradeoff between offset suppression and disturbance of low-frequency signals.

(4f) **Other:** Sizing for MOS switches in the programmable resistor network, body-effect considerations, layout margin assumptions, and a table of proposed transistor sizes (W/L, L) with reason.

4 Simulations and required plots

Each simulation must include an annotated schematic screenshot and plots.

4.1 DC operating point

- Provide a bias table: node voltages and branch currents (all supply currents)-All voltage biases must be generated using current mirrors.
- Show bias stability: sweep tail bias (or global bias) and plot critical node voltages vs bias.

4.2 AC / small-signal analysis

- Plot differential gain $A_d(f)$ vs frequency (log scale). Report DC gain (dB), -3 dB frequency and UGB.
- Plot common-mode gain $A_{cm}(f)$ vs frequency. Report low-frequency A_{cm}.
- Table: CMRR (dB) at representative frequencies (e.g., 10 kHz, 1 MHz, 10 MHz).

4.3 Stability analysis

- Use `stb` or explicit loop-break. Provide the loop-break point screenshot, loop-gain (magnitude and phase) plots.
- Report differential phase margin and gain margin.

- Break the CMFB loop separately and report CMFB loop-gain, unity gain frequency and CMFB phase margin.

4.4 Transient / large-signal analysis

- Show output waveform for sinusoidal inputs at different amplitudes and frequencies. Annotate distortion/clipping limits.
- Large step response: report input step, output response, and calculated slew-rate (V/μs).
- Settling time measurement to 2% and 1% for an input step.

4.5 Noise analysis

- Plot input-referred noise spectral density $v_{n,in}(f)$ from 1 Hz to 10 MHz (log-log or log-linear).
- Report $v_{n,in}$ at 1 kHz (nV/$\sqrt{\text{Hz}}$) and integrated RMS noise over 1 Hz–10 MHz.

4.6 Offset cancellation (DCOC)

- Measure output DC offset with zero differential input before enabling DCOC.
- Enable DCOC; plot output DC vs time and show convergence. Report final DC offset (V).
- Compute input-referred offset V_{OS} before and after cancellation.

4.7 Programmable gain verification

- Table: Measured closed-loop gain (dB and V/V) vs control code.
- Plot: Bandwidth vs gain setting. For each code report the -3 dB frequency.
- Report gain error (list DC gain error).

4.8 PSRR and PVT

- PSRR: inject small ripple at VDD, measure output vs ripple frequency, report PSRR at low freq and at UGB.
- PVT: repeat DC/AC/noise/offset results for corners TT, FF, SS; supply $\pm$10%; temperatures -40°C to 125°C. Tabulate worst-case values.

5 CMFB details and targets

Break CMFB loop (insert probe at CMFB error/correction node) and run small-signal analysis to obtain loop gain and phase.

Targets:

- CMFB loop gain $\geq 40\,\text{dB}$ (low frequency).
- CMFB unity-gain frequency $\approx$ 5–10 MHz (recommendation: 5–10$\times$ slower than differential loop).
- CMFB phase margin $\geq 60^\circ$.

6 Report

1. Title, name, roll no., and formatting compliance.
2. Full schematic and netlist (annotated).
3. Hand calculations (3a–3f) with numeric results.
4. DC operating point table (4.1).
5. AC small-signal plots (differential and common-mode) (4.2).
6. Stability analysis and loop-break screenshots (4.3).
7. Transient waveforms, slew-rate, settling (4.4).
8. Noise plots and integrated noise (4.5).
9. Offset cancellation demonstration (4.6).
10. Programmable gain table and bandwidth vs code (4.7).
11. PSRR and PVT tables (4.8).
12. Discussion, conclusion, and comparison against targets.

7 Report submission guidelines

- Submit a single PDF containing title page, schematics, calculations, plots and discussion.
- Include a folder (zipped) with raw simulation files (Cadence schematics/netlists and plot-data) named `Name_RollNo_Sim.zip`.

- Plots must be legible with axes labeled (units) and your name/roll in corner.
- Reports lacking required plots or hand calculations will be penalized.

References

[1] P. E. Allen and D. R. Holberg, *CMOS Analog Circuit Design*, Oxford University Press.

[2] B. Razavi, *Design of Analog CMOS Integrated Circuits*, McGraw-Hill.

[3] P. R. Gray, P. J. Hurst, S. H. Lewis, and R. G. Meyer, *Analysis and Design of Analog Integrated Circuits*, Wiley.

[4] M. Cha, D. Oh, I. Choi, and I. Kwon, "A 64-dB spurious free dynamic range CMOS baseband analog chain for IEEE 802.11a/b/g WLAN," in *Proc. IEEE Radio and Wireless Symposium (RWS)*, Phoenix, AZ, USA, 2011, pp. 315–318.

[5] L.-S. Wang, P.-C. Ku, P.-T. Ko, C.-J. Chung, and L.-H. Lu, "A 40.4-dB range, 0.73-dB step, and 0.07-dB error programmable gain amplifier using gain error shifting technique," *IEEE Trans. Circuits Syst. II*, vol. 66, no. 7, pp. 1109–1113, Jul. 2019.

[6] S. D'Amico, A. Spagnolo, A. Donno, V. Chironi, P. Wambacq, and A. Baschirotto, "A low-power analog baseband section for 60-GHz receivers in 90-nm CMOS," *IEEE Trans. Microw. Theory Techn.*, vol. 62, no. 8, pp. 1724–1735, Aug. 2014.

[7] W. Wu, L. Zhang, L. Zhang, and Y. Wang, "A temperature-robust analog baseband chain for automotive radar," in *Proc. Int. Conf. Electron Devices Solid-State Circuits (EDSSC)*, Hsinchu, Taiwan, 2017, pp. 1–2.