USB TO UART

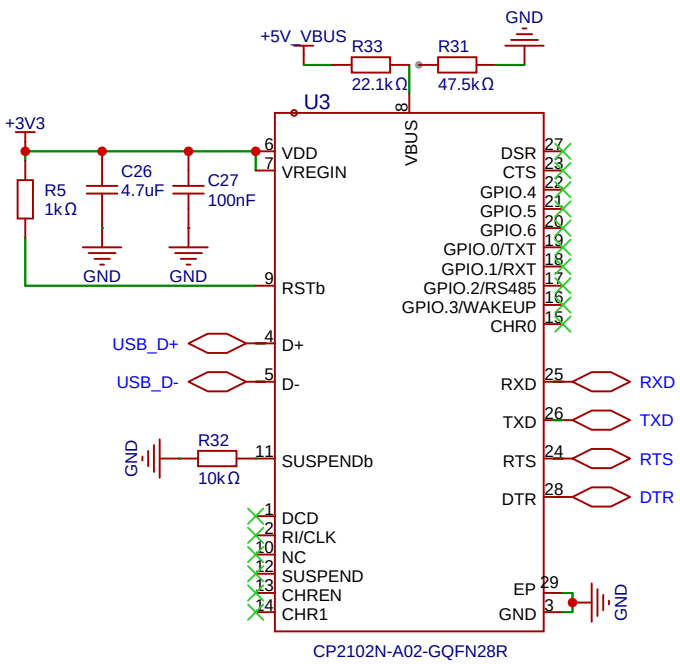

USB TYPE-C CONNECTOR

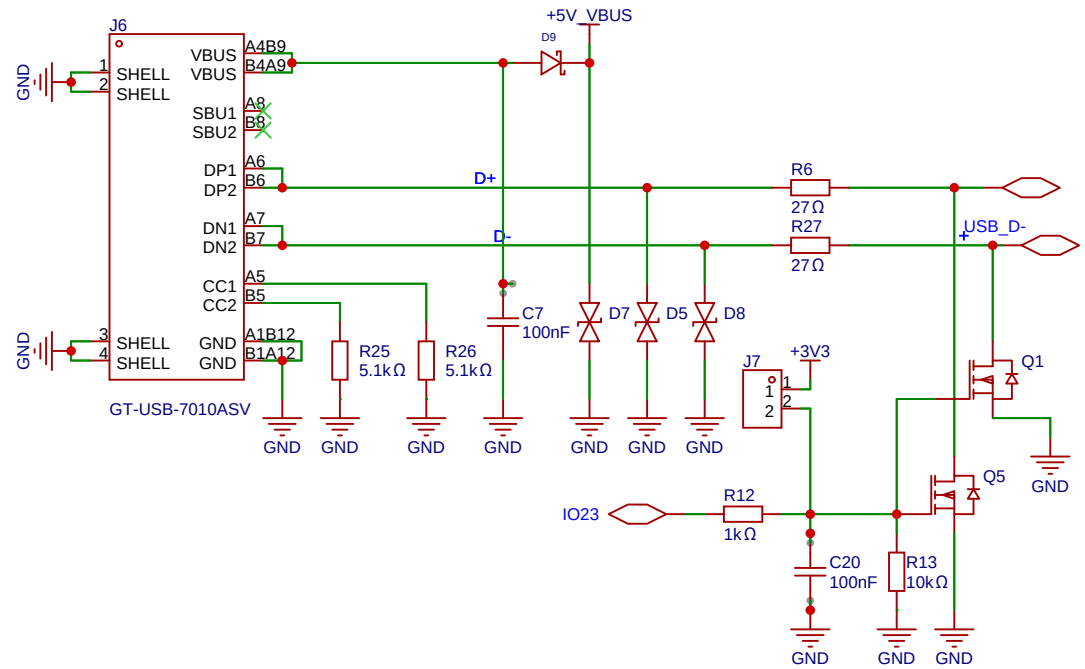

SERIAL SIGNAL HANDLING

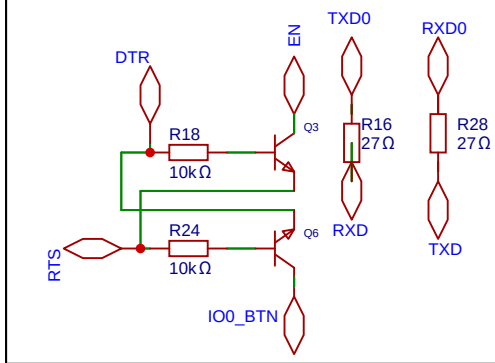

USER LED

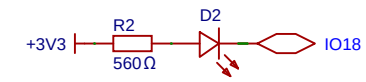

RESET BUTTON

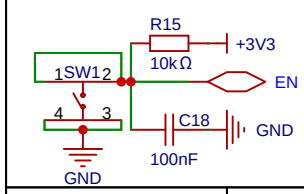

POWER INPUT SELECTION

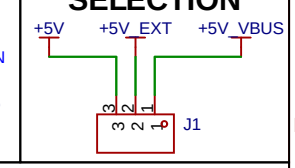

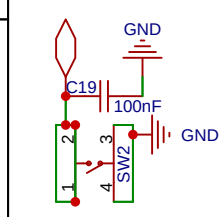

+5V TO +3V3

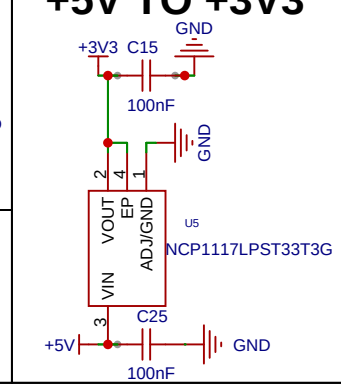

POWER LED

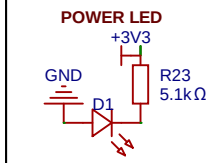

ESP32 Module Connected to DHT22 sensor

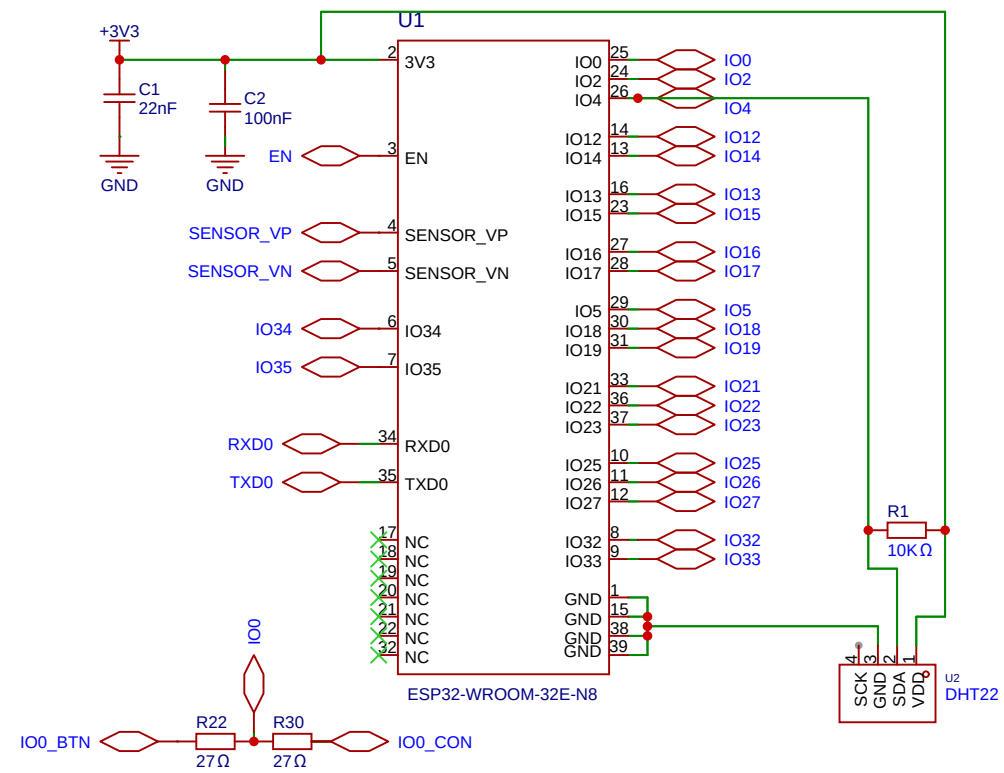

CONNECTORS

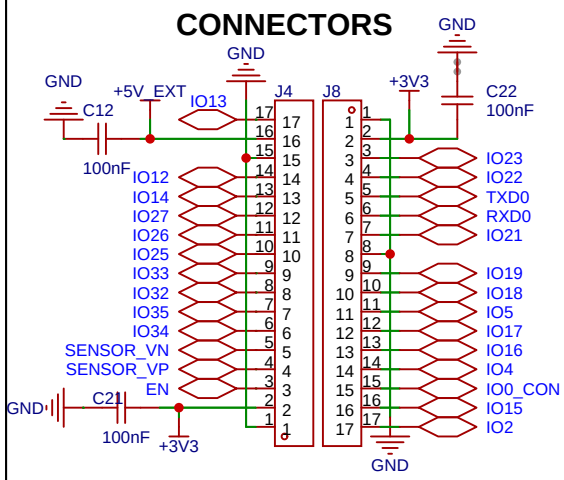

Reference	Quantity	Description / Purpose
ESP32-WROOM-32 E	1	Main microcontroller module used to process data and control the system
3.3V Power Supply (VCC)	1	Provides power to the ESP32 and sensor
GND	1	Common ground connection for the circuit
DHT22	1	Measures temperature and humidity values
Resistor 10 kΩ (R1)	1	Pull-up resistor for stable DHT22 data communication
Capacitor 22 nF (C1)	1	Helps filter and stabilize power supply noise
Capacitor 100 nF (C2)	1	Decoupling capacitor for voltage stability near ESP32

Schematic	ESP32	Create at	2026-05-10
		Update at	2026-05-12
Board	ESP32	Page	ESP32
Drawn		LAB-166980	
Reviewed			
		Version	Size	Page 1 Total 1
EasyEDA		V1.0	A4	EasyEDA.com