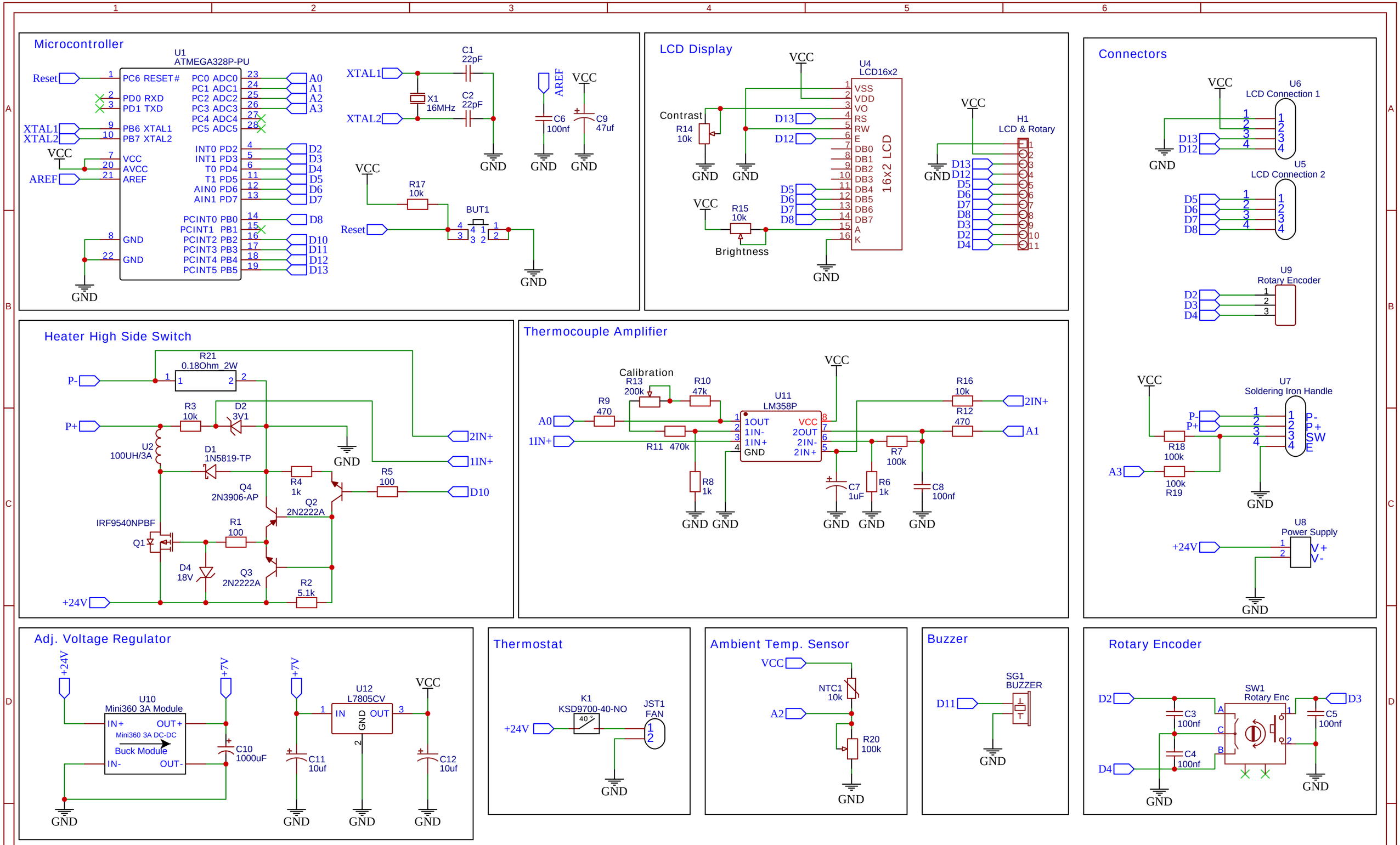

The LM358P is not rail to rail Operational Amplifier is better to be replaced with AD822 or MCP602 which can provide more stable and accurate temperature measurements.

TITLE: ATmega328 Soldering Station / T12 Tips	REV: 1.0
嘉立创EDA	Company: HM Projects
	Sheet: 1/1
	Date: 2022-12-23 Drawn By: Valentin S.