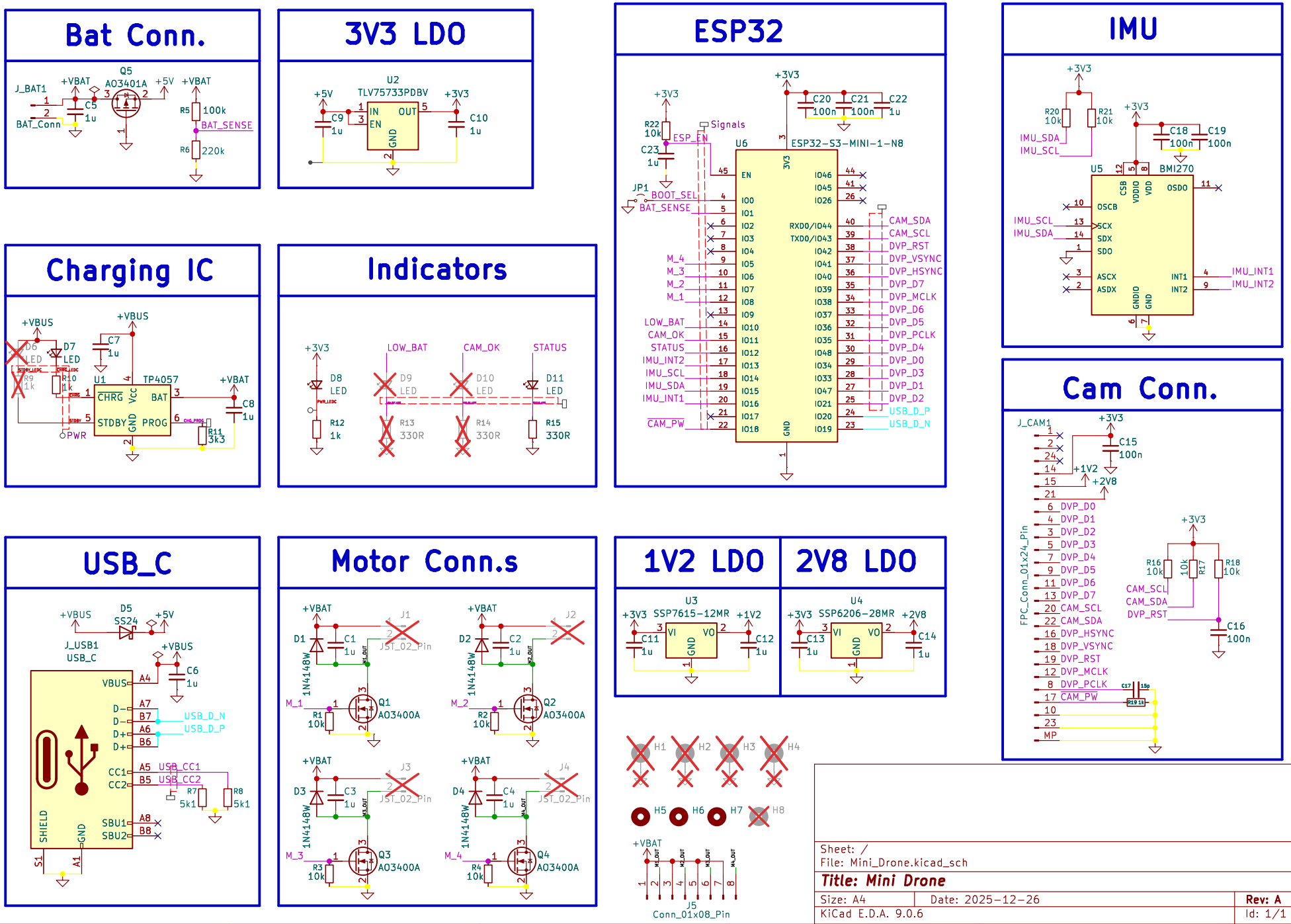
Bat Conn.
J_BAT1
BAT_Conn
+VBAT
Q5
AO3401A
+5V
C5
1u
R5
100k
BAT_SENSE
R6
220k
3V3 LDO
U2
TLV75733PDBV
+5V
C9
1u
IN
EN
OUT
GND
+3V3
C10
1u
ESP32
U6
ESP32-S3-MINI-1-N8
+3V3
C20
100n
C21
100n
C22
1u
R22
10k
ESP_EN
C23
1u
Signals
JP1
BOOT_SEL
BAT_SENSE
EN
IO0
IO1
IO2
IO3
IO4
IO5
IO6
IO7
IO8
IO9
IO10
IO11
IO12
IO13
IO14
IO15
IO16
IO17
IO18
IO46
IO45
IO26
RXD0/IO44
TXD0/IO43
IO42
IO41
IO40
IO39
IO38
IO37
IO36
IO35
IO48
IO34
IO33
IO47
IO21
IO20
IO19
GND
M_4
M_3
M_2
M_1
LOW_BAT
CAM_OK
STATUS
IMU_INT2
IMU_SCL
IMU_SDA
IMU_INT1
CAM_PW
CAM_SDA
CAM_SCL
DVP_RST
DVP_VSYNC
DVP_HSYNC
DVP_D7
DVP_MCLK
DVP_D6
DVP_D5
DVP_PCLK
DVP_D4
DVP_D0
DVP_D3
DVP_D1
DVP_D2
USB_D_P
USB_D_N
IMU
+3V3
R20
10k
R21
10k
IMU_SDA
IMU_SCL
C18
100n
C19
100n
U5
BMI270
CSB
VDDIO
VDD
OSDO
OSCB
SCX
SDX
SDO
ASCX
ASDX
INT1
INT2
GNDIO
GND
IMU_INT1
IMU_INT2
Charging IC
+VBUS
D6
LED
D7
LED
C7
1u
R9
1k
R10
1k
U1
TP4057
CHRG
Vcc
BAT
STDBY
GND
PROG
+VBAT
C8
1u
R11
3k3
PWR
Indicators
+3V3
D8
LED
R12
1k
LOW_BAT
D9
LED
R13
330R
CAM_OK
D10
LED
R14
330R
STATUS
D11
LED
R15
330R
Cam Conn.
J_CAM1
FPC_Conn_01x24_Pin
+3V3
C15
100n
+1V2
+2V8
DVP_D0
DVP_D1
DVP_D2
DVP_D3
DVP_D4
DVP_D5
DVP_D6
DVP_D7
CAM_SCL
CAM_SDA
DVP_HSYNC
DVP_VSYNC
DVP_RST
DVP_MCLK
DVP_PCLK
CAM_PW
MP
R16
10k
R17
10k
R18
10k
CAM_SCL
CAM_SDA
DVP_RST
C16
100n
USB_C
+VBUS
D5
SS24
+5V
J_USB1
USB_C
VBUS
A4
C6
1u
D-
D-
D+
D+
A7
B7
A6
B6
USB_D_N
USB_D_P
CC1
CC2
A5
B5
USB_CC1
USB_CC2
R7
5k1
R8
5k1
SHIELD
GND
SBU1
SBU2
A8
B8
S1
A1
Motor Conn.s
+VBAT
D1
1N4148W
C1
1u
J1
JST_02_Pin
M1_OUT
M_1
R1
10k
Q1
AO3400A
+VBAT
D2
1N4148W
C2
1u
J2
M2_OUT
M_2
R2
10k
Q2
AO3400A
+VBAT
D3
1N4148W
C3
1u
J3
JST_02_Pin
M3_OUT
M_3
R3
10k
Q3
AO3400A
+VBAT
D4
1N4148W
C4
1u
J4
JST_02_Pin
M4_OUT
M_4
R4
10k
Q4
AO3400A
1V2 LDO
U3
SSP7615-12MR
+3V3
+1V2
C11
1u
VI
VO
GND
C12
1u
2V8 LDO
U4
SSP6206-28MR
+3V3
+2V8
C13
1u
VI
VO
GND
C14
1u
H1
H2
H3
H4
H5
H6
H7
H8
+VBAT
J5
Conn_01x08_Pin
Sheet: /
File: Mini_Drone.kicad_sch
Title: Mini Drone
Size: A4
Date: 2025-12-26
Rev: A
KiCad E.D.A. 9.0.6
Id: 1/1