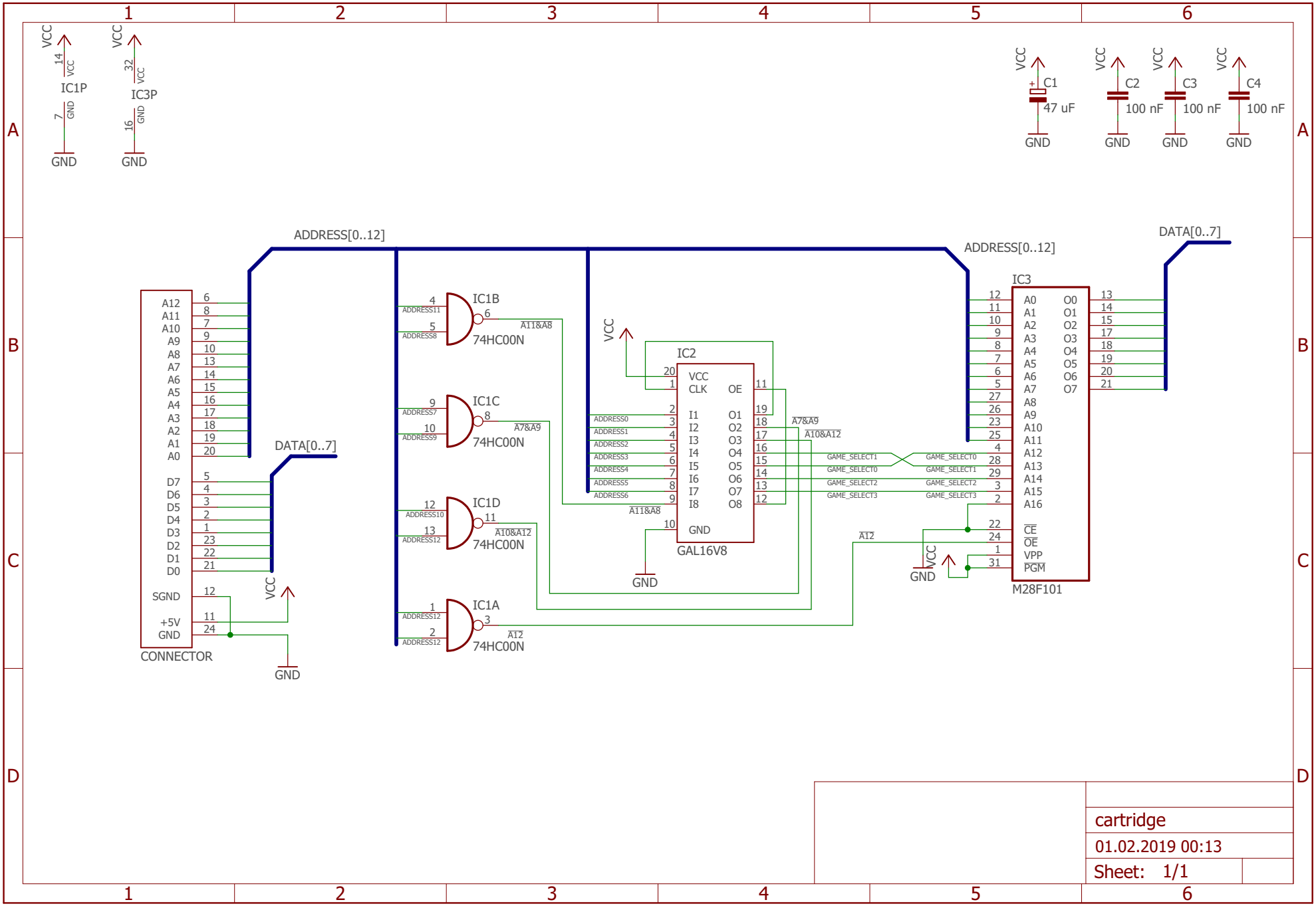
IC1P
IC3P
VCC
GND
C1
47 uF
C2
C3
C4
100 nF
ADDRESS[0..12]
DATA[0..7]
CONNECTOR
IC1B
IC1C
IC1D
IC1A
74HC00N
IC2
GAL16V8
IC3
M28F101
A11&A8
A7&A9
A10&A12
A12
GAME_SELECT0
GAME_SELECT1
GAME_SELECT2
GAME_SELECT3
cartridge
01.02.2019 00:13
Sheet: 1/1