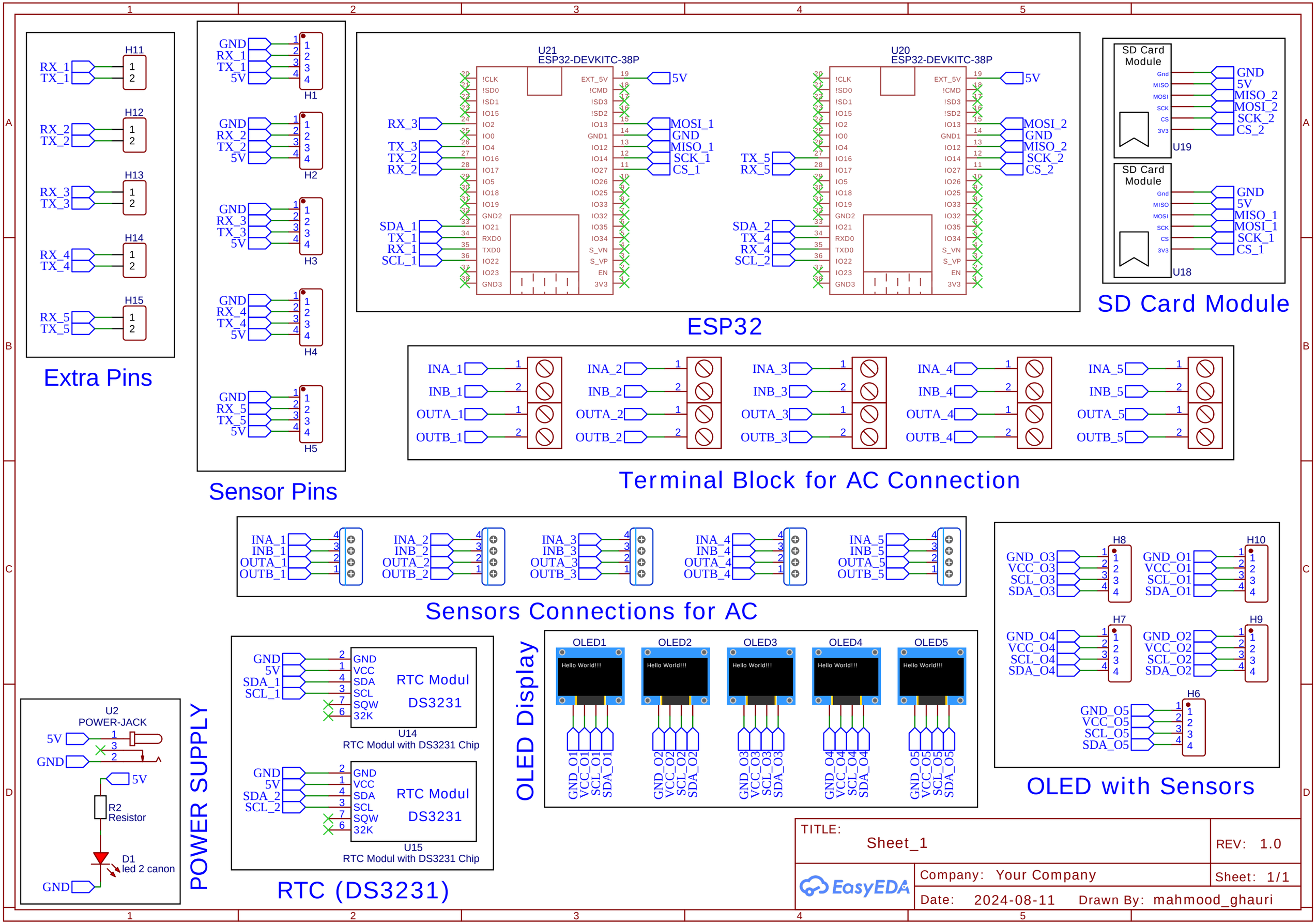
Extra Pins
H11
RX_1
TX_1
H12
RX_2
TX_2
H13
RX_3
TX_3
H14
RX_4
TX_4
H15
RX_5
TX_5
Sensor Pins
GND
RX_1
TX_1
5V
H1
RX_2
TX_2
H2
RX_3
TX_3
H3
RX_4
TX_4
H4
RX_5
TX_5
H5
ESP32
U21
ESP32-DEVKITC-38P
U20
ESP32-DEVKITC-38P
5V
MOSI_1
GND
MISO_1
SCK_1
CS_1
MOSI_2
MISO_2
SCK_2
CS_2
SDA_1
SCL_1
SDA_2
SCL_2
SD Card Module
U19
U18
SD Card Module
MISO_2
MOSI_2
MISO_1
MOSI_1
Terminal Block for AC Connection
INA_1
INB_1
OUTA_1
OUTB_1
INA_2
INB_2
OUTA_2
OUTB_2
INA_3
INB_3
OUTA_3
OUTB_3
INA_4
INB_4
OUTA_4
OUTB_4
INA_5
INB_5
OUTA_5
OUTB_5
Sensors Connections for AC
OLED with Sensors
H8
GND_O3
VCC_O3
SCL_O3
SDA_O3
H10
GND_O1
VCC_O1
SCL_O1
SDA_O1
H7
GND_O4
VCC_O4
SCL_O4
SDA_O4
H9
GND_O2
VCC_O2
SCL_O2
SDA_O2
H6
GND_O5
VCC_O5
SCL_O5
SDA_O5
U2
POWER-JACK
R2
Resistor
D1
led 2 canon
POWER SUPPLY
RTC (DS3231)
RTC Modul
DS3231
U14
RTC Modul with DS3231 Chip
U15
RTC Modul with DS3231 Chip
OLED Display
OLED1
OLED2
OLED3
OLED4
OLED5
Hello World!!!
TITLE:
Sheet_1
REV: 1.0
Company: Your Company
Sheet: 1/1
Date: 2024-08-11
Drawn By: mahmood_ghauri
EasyEDA