Applied Digital Logic Design (ECE101)

Dr. Chaitra S N
Department of ISE
N.M.A.M. Institute of Technology, Nitte

UNIT – II

Simplification of Boolean Expressions :

Simplification of Boolean Functions using Boolean Algebra, Karnaugh Maps, Quine-McCluskey (up to four variables), Realization of Boolean functions using Basic Gates

06 Hrs

Introduction of K-Map (Karnaugh Map)

In many digital circuits and practical problems, we need to find expressions with minimum variables. We can minimize Boolean expressions of 3, 4 variables very easily using K-map without using any Boolean algebra theorems.

K-map can take two forms:

1.Sum of product (SOP)

2.Product of Sum (POS)

Introduction of K-Map (Karnaugh Map)

SOP FORM

1. K-map of 3 variables

A \ BC	B'C' 00	B'C 01	BC 11	BC' 10
A' 0	A'B'C' 0	A'B'C 1	A'BC 3	A'BC' 2
A 1	AB'C' 4	AB'C 5	ABC 7	ABC' 6

SOP(MINTERMS)

8 Blocks = 1

4 Blocks = 1 variable term

2 Blocks = 2 variable term

1 Block = 3 variable term

2. K-map for 4 variables

AB \ CD	C'D' 00	C'D 01	CD 11	CD' 10
A'B' 00	A'B'C'D' 0	A'B'C'D 1	A'B'CD 3	A'B'CD' 2
A'B 01	A'BC'D' 4	A'BC'D 5	A'BCD 7	A'BCD' 6
AB 11	ABC'D' 12	ABC'D 13	ABCD 15	ABCD' 14
AB' 10	AB'C'D' 8	AB'C'D 9	AB'CD 11	AB'CD' 10

SOP(MINTERMS)

16 Blocks = 1
8 Blocks = 1 variable term
4 Blocks = 2 variable term
2 Blocks = 3 variable term
1 Block = 4 variable term

Steps to Solve Expression using K-map

1.Select the K-map according to the number of variables.

2.Identify minterms or maxterms as given in the problem.

3.For SOP put 1's in blocks of K-map respective to the minterms (0's elsewhere).

4.For POS put 0's in blocks of K-map respective to the maxterms (1's elsewhere).

5.Make rectangular groups containing total terms in power of two like 16, 8,4,2, 1 and try to cover as many elements as you can in one group.

6.From the groups made in step 5 find the product terms and sum them up for SOP form.

Rules for K-map Grouping

1.We need to group the cells with a value of 1 and may not include any cell containing zero.

1.Groups may be horizontal, vertical, but not diagonal.

1.Groups must contain 1, 2, 4, 8, or in general 2n cells.

1.The Group should be as large as possible.

1.Groups can overlap with each other.

1.Opposite or corner cells can be grouped.

1.Groups may wrap around the table. The leftmost cell in a row may be grouped with the rightmost cell, and the top cell in a column may be grouped with the bottom cell.

Introduction of K-Map (Karnaugh Map)

K-map uses some rules for the simplification of Boolean expressions by combining together adjacent cells into single term.

Rule 1 – Any cell containing a zero cannot be grouped.

A \ BC	00	01	11	10
0	1	0	1	0
1	0	1	1	1

Rule 2 – Groups must contain 2n cells (n starting from 1).

A \ BC	00	01	11	10
0	1	0	1	0
1	0	1	1	1

Introduction of K-Map (Karnaugh Map)

Rule 3 – Grouping must be horizontal or vertical, but must not be diagonal.

A \ BC	00	01	11	10
0	1	1	1	0
1	0	0	1	1

✗

A \ BC	00	01	11	10
0	1	1	1	0
1	0	0	1	1

√

A \ BC	00	01	11	10
0	1	1	1	0
1	0	0	1	1

√

Introduction of K-Map (Karnaugh Map)

Rule 4 – Groups must be covered as largely as possible.

A \ BC	00	01	11	10
0	1	0	1	0
1	1	1	1	1

×

A \ BC	00	01	11	10
0	1	0	1	0
1	1	1	1	1

√

Rule 5 – If 1 of any cell cannot be grouped with any other cell, it will act as a group itself.

A \ BC	00	01	11	10
0	1	0	1	0
1	0	1	0	1

Rule 6 – Groups may overlap but there should be as few groups as possible.

A \ BC	00	01	11	10
0	0	0	1	1
1	1	1	1	1

Introduction of K-Map (Karnaugh Map)

Rule 7 – The leftmost cell/cells can be grouped with the rightmost cell/cells and the topmost cell/cells can be grouped with the bottommost cell/cells.

A \ BC	00	01	11	10
0	1	0	0	1
1	1	0	0	1

Introduction of K-Map (Karnaugh Map)

Minimize the following Boolean expression using K-map –

F (A, B, C) = A'BC + A'BC' + AB'C'+ AB'C

A \ BC	00	01	11	10
0	0	0	1	1
1	1	1	0	0

A \ BC	00	01	11	10
0	0	0	1	1
1	1	1	0	0

We have got two groups which are termed as A'B and AB'. Hence, F (A, B, C) = A'B + AB' = A $\oplus$ B. It is the minimized form.

In reality, the K-map is really a sphere (or can be visualized as a cylinder in some aspects) which has been flattened into a two-dimensional plane.

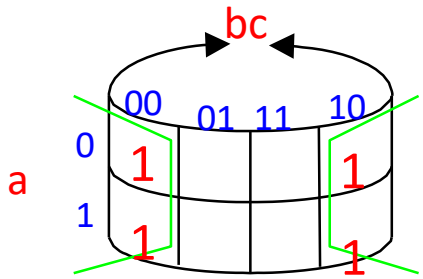

This figure demonstrates that the **(10) column** (right edge) is in reality **adjacent to the (00) column** (left edge) even though they don't look like they are adjacent.

$$f\,(a,b,c) = \bar{C}$$

Note that **between the columns (00) and (10) only the 'b' variable changes** (<u>which is the **K-map** requirement for adjacency</u>.)

Now, due to this, the four 1's in the map can be grouped into a single group of four where the variable **'a' falls out of the expression vertically** and the **variable 'b' falls out horizontally**.

The only variable which is left is the **variable 'c' which is a '0'** in those two columns so the final expression is a $\bar{C}$.

Introduction of K-Map (Karnaugh Map)

F=∑m(1,3,6,7)

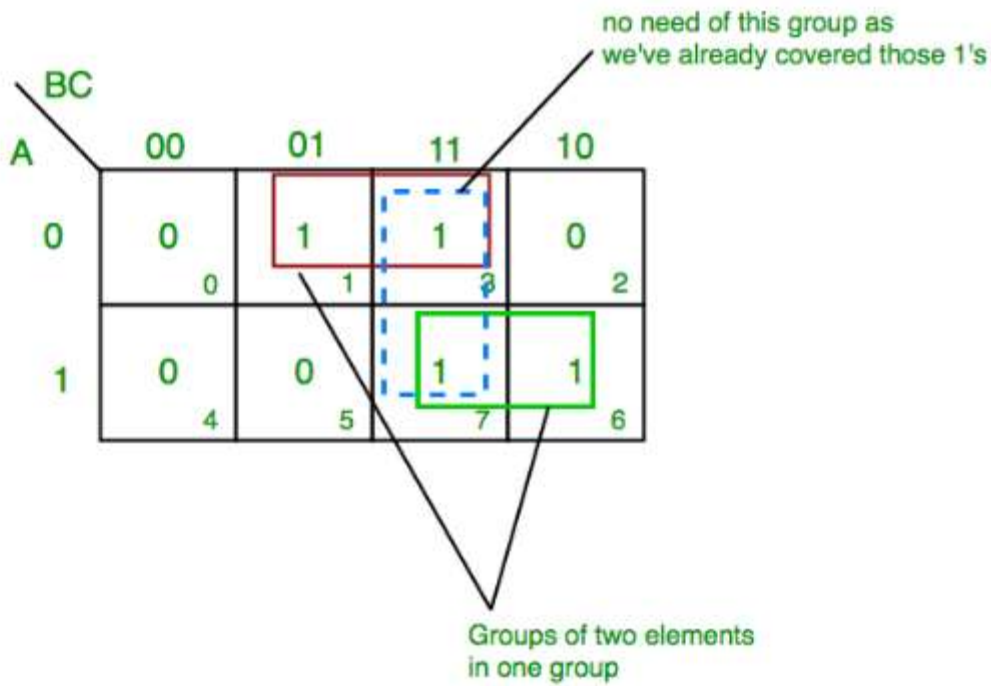

$\bar{A}C$ AB

$$F = \bar{A}C + AB$$

Introduction of K-Map (Karnaugh Map)

F (P, Q, R, S) = ∑(0, 2, 5, 7, 8, 10, 13, 15)

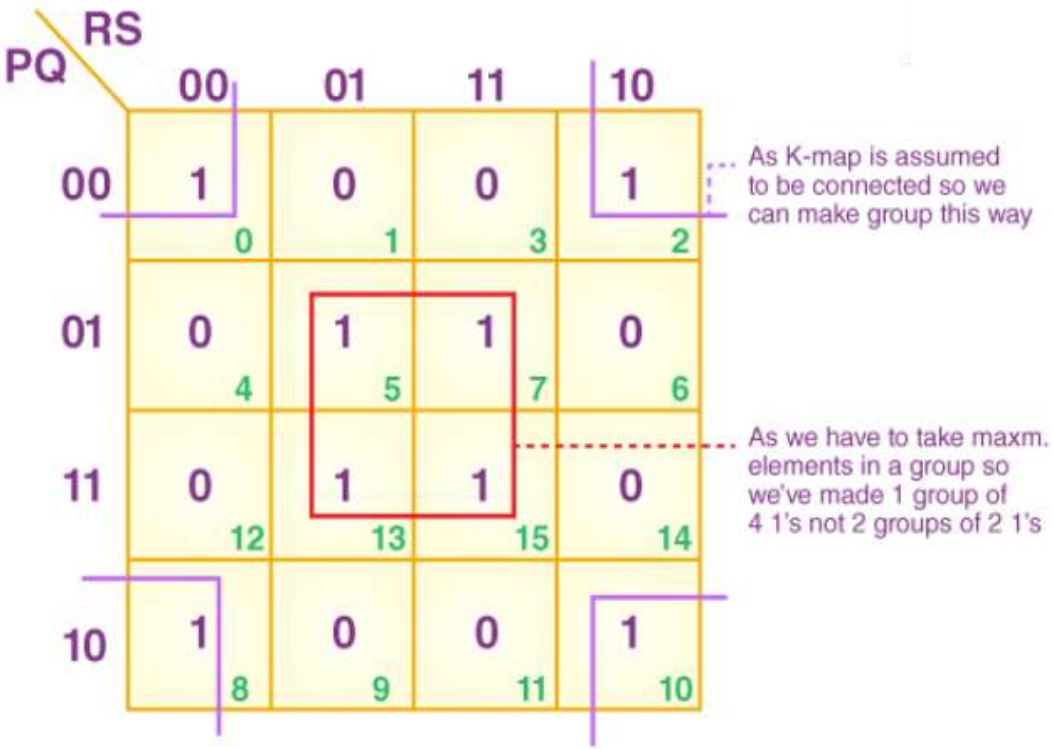

QS

$\bar{Q}\,\bar{S}$

F =QS + $\bar{Q}\,\bar{S}$

Introduction of K-Map (Karnaugh Map)

$$f(A,B,C,D) = \Sigma m(0,1,3,4,5,7,12,13,15)$$

AB \ CD	00	01	11	10
00	1	1	1	0
01	1	1	1	0
11	1	1	1	0
10	0	0	0	0

AB \ CD	00	01	11	10
00	1	1	1	0
01	1	1	1	0
11	1	1	1	0
10	0	0	0	0

$$f(A,B,C,D) = \overline{A}\,\overline{C} + \overline{A}D + B\overline{C} + BD$$

Design a combinational logic circuit to compare two 1-bit numbers (A and B) and to produce three outputs (A>B, A<B, A EQ B)

Truth table for a one-bit comparator

A	B	A EQ B	A > B	A < B
0	0	1	0	0
0	1	0	0	1
1	0	0	1	0
1	1	1	0	0

1-bit comparator

The equations for each output are

$$A \text{ EQ } B = A'B' + AB = (A \oplus B)'$$

$$A > B = AB'$$

$$A < B = A'B$$

Logic for a single-bit comparator

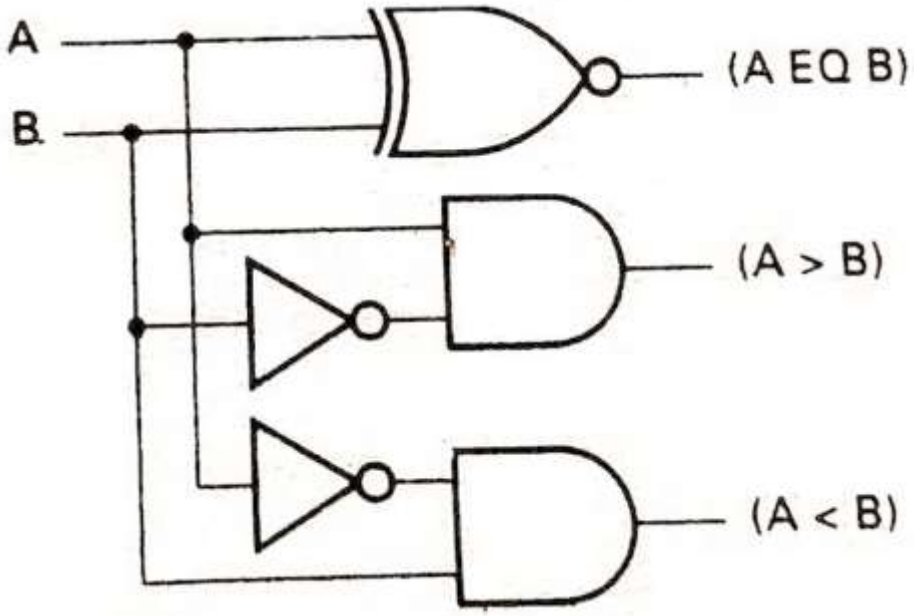

2- bit comparator

Design a combinational circuit to compare two 2-bit numbers and to produce three outputs .

Truth table for a two-bit magnitude comparator

Inputs				Outputs		
A		B				
$a1$	$a0$	$b1$	$b0$	$A = B$	$A > B$	$A < B$
0	0	0	0	1	0	0
0	0	0	1	0	0	1
0	0	1	0	0	0	1
0	0	1	1	0	0	1
0	1	0	0	0	1	0
0	1	0	1	1	0	0
0	1	1	0	0	0	1
0	1	1	1	0	0	1
1	0	0	0	0	1	0
1	0	0	1	0	1	0
1	0	1	0	1	0	0
1	0	1	1	0	0	1
1	1	0	0	0	1	0
1	1	0	1	0	1	0
1	1	1	0	0	1	0
1	1	1	1	1	0	0

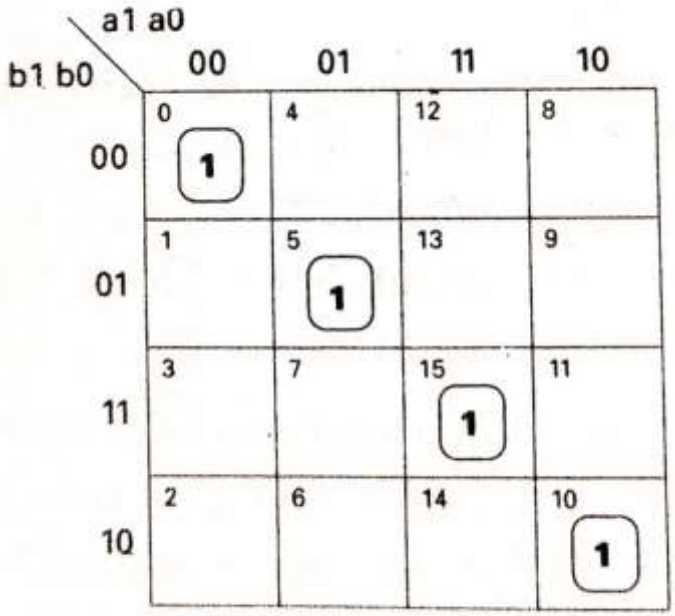
a1 a0
b1 b0
00 01 11 10
0 4 12 8
1 5 13 9
3 7 15 11
2 6 14 10
1
1
1
1

(a) (A EQ B)

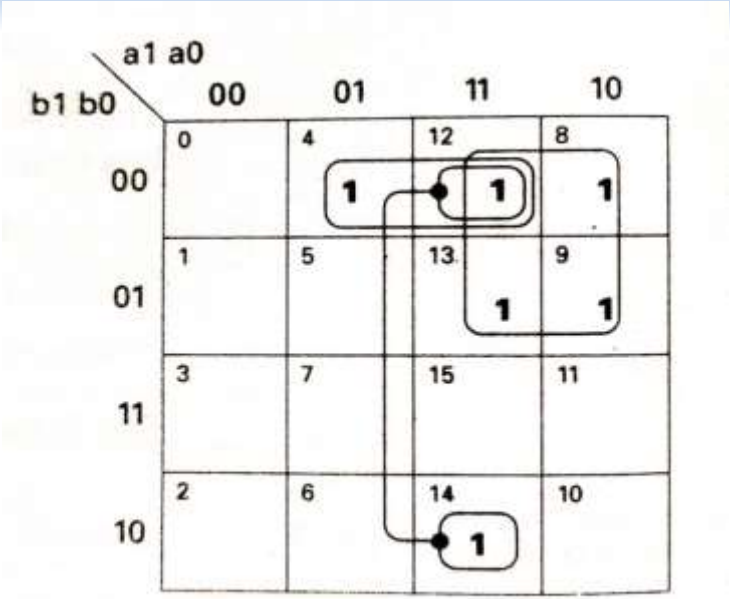
a1 a0
b1 b0
00 01 11 10
0 4 12 8
1 5 13 9
3 7 15 11
2 6 14 10
1
1
1
1
1
1

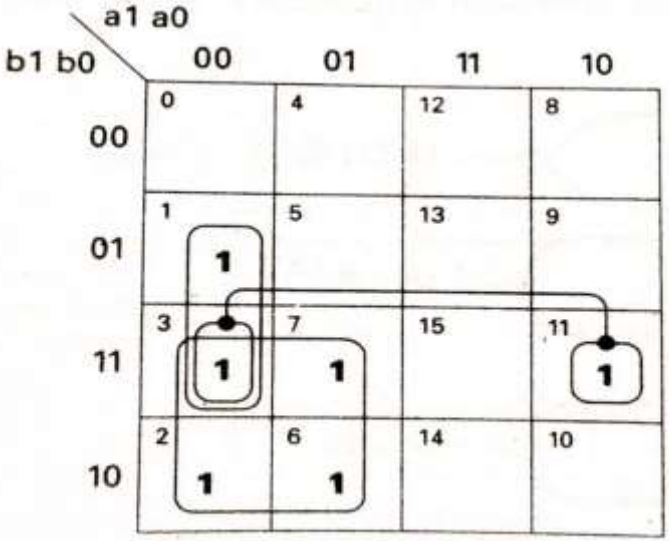
a1 a0
b1 b0
00 01 11 10
0 4 12 8
1 5 13 9
3 7 15 11
2 6 14 10
1
1
1
1
1
1

(c) (A < B)

$$(A \text{ EQ } B) = f(a1, a0, b1, b0) = \sum(0, 5, 10, 15)$$

$$(A > B) = f(a1, a0, b1, b0) = \sum(4, 8, 9, 12, 13, 14)$$

$$(A < B) = f(a1, a0, b1, b0) = \sum(1, 2, 3, 6, 7, 11)$$

$$(A \text{ EQ } B) = a1'a0'b1'b0' + a1'a0b1'b0 + a1a0b1b0 + a1a0'b1b0'$$

$$(A > B) = a1b1' + a0b1'b0' + a1a0b0'$$

$$(A < B) = a1'b1 + a1'a0'b0 + a0'b1b0$$

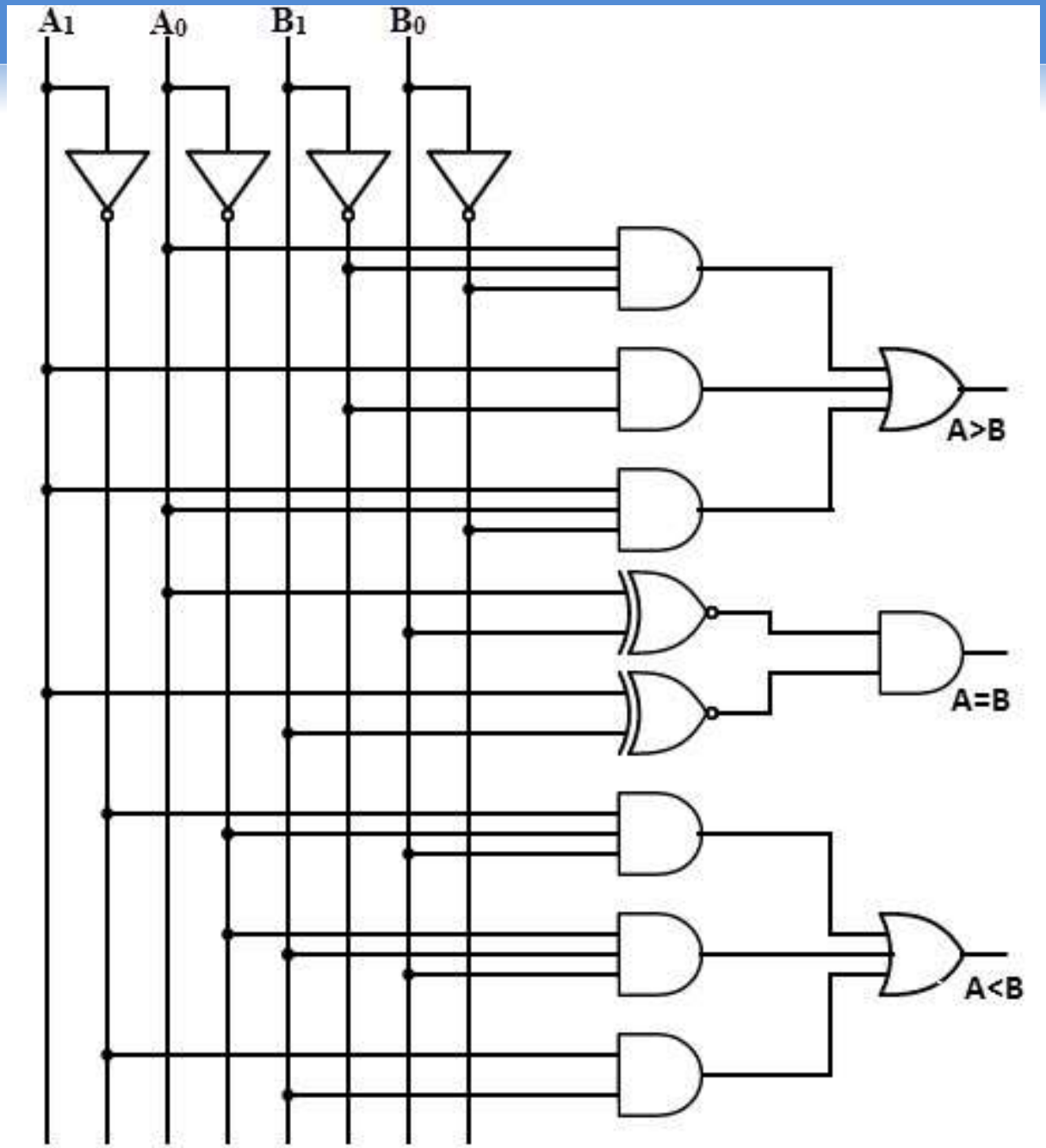
A1
A0
B1
B0
A>B
A=B
A<B

Incompletely Specified Functions

In Boolean algebra, a Boolean function or logic function whose output values are known for a subset of its inputs and has output which is a don't care condition for at least one of its input combinations is called an **incompletely specified function**.

Hence, in an incompletely specified function, the value of the function for don't care combinations can be selected either a 0 or a 1 depending on which one leads to the more minimal solution of the function.

For these combinations, the Karnaugh map (K-Map) entry is marked as X or dc , which indicates that the particular cell can be taken as a 0 or a 1.

Incompletely Specified Functions

$F(A,B,C)=\sum m(1,2,7)+d(0,3,4)$

A \ BC	00	01	11	10
0	X (0)	1 (1)	X (3)	1 (2)
1	X (4)	0 (5)	1 (7)	0 (6)

Karnaugh Map

$F(A,B,C)= \bar{A}+BC$

Incompletely Specified Functions

Design a digital system whose output is defined as logically low if the 4-bit input binary number is a multiple of 3; otherwise, the output will be logically high. The output is defined if and only if the input binary number is greater than 2

Truth Table

Inputs				Decimal Equivalent	Output
A	B	C	D		Y
0	0	0	0	0	X
0	0	0	1	1	X
0	0	1	0	2	X
0	0	1	1	3	0
0	1	0	0	4	1
0	1	0	1	5	1
0	1	1	0	6	0
0	1	1	1	7	1
1	0	0	0	8	1
1	0	0	1	9	0
1	0	1	0	10	1
1	0	1	1	11	1
1	1	0	0	12	0
1	1	0	1	13	1
1	1	1	0	14	1
1	1	1	1	15	0

where X indicates Don't Care Condition

AB \ CD	00	01	11	10
00	X (0)	X (1)	0 (3)	X (2)
01	1 (4)	1 (5)	1 (7)	0 (6)
11	0 (12)	1 (13)	0 (15)	1 (14)
10	1 (8)	0 (9)	1 (11)	1 (10)

Incompletely Specified Functions

AB \ CD	00	01	11	10
00	X (0)	X (1)	0 (3)	X (2)
01	1 (4)	1 (5)	1 (7)	0 (6)
11	0 (12)	1 (13)	0 (15)	1 (14)
10	1 (8)	0 (9)	1 (11)	1 (10)

$$Y = \bar{B}\bar{D} + \bar{A}\bar{C} + \bar{A}BD + B\bar{C}D + A\bar{B}C + AC\bar{D}$$

BCD-to-Excess-3 Code Converter (1/2)

- Truth table:

	BCD				Excess-3			
	A	B	C	D	W	X	Y	Z
0	0	0	0	0	0	0	1	1
1	0	0	0	1	0	1	0	0
2	0	0	1	0	0	1	0	1
3	0	0	1	1	0	1	1	0
4	0	1	0	0	0	1	1	1
5	0	1	0	1	1	0	0	0
6	0	1	1	0	1	0	0	1
7	0	1	1	1	1	0	1	0
8	1	0	0	0	1	0	1	1
9	1	0	0	1	1	1	0	0
10	1	0	1	0	X	X	X	X
11	1	0	1	1	X	X	X	X
12	1	1	0	0	X	X	X	X
13	1	1	0	1	X	X	X	X
14	1	1	1	0	X	X	X	X
15	1	1	1	1	X	X	X	X

- K-maps:

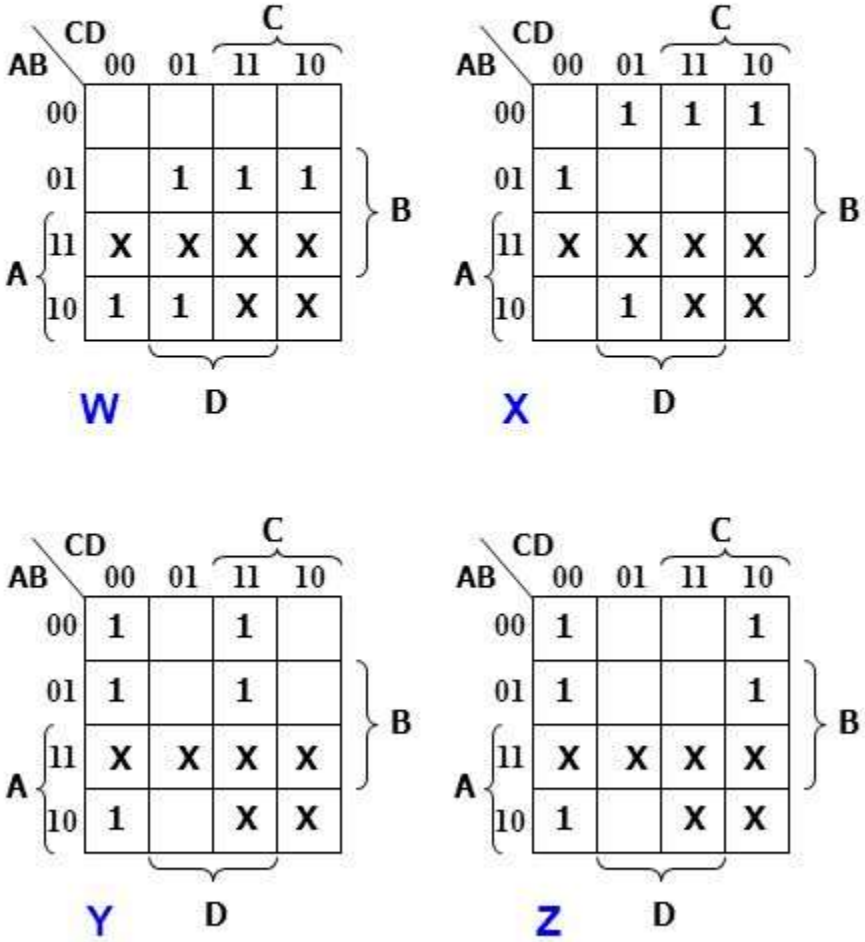

Example 2: BCD to Excess-3 Converter (Optimization)

AB \ CD	00	01	11	10
00	0	0	0	0
01	0	1	1	1
11	X	X	X	X
10	1	1	X	X

W

AB \ CD	00	01	11	10
00	0	1	1	1
01	1	0	0	0
11	X	X	X	X
10	0	1	X	X

X

AB \ CD	00	01	11	10
00	1	0	1	0
01	1	0	1	0
11	X	X	X	X
10	1	0	X	X

Y

AB \ CD	00	01	11	10
00	1	0	0	1
01	1	0	0	1
11	X	X	X	X
10	1	0	X	X

Z

The final set of output equations are

$W=A+BC+BD=A+B(C+D)$

$X=B'C+B'D+BC'D'=B'(C+D)+BC'D'$

$Y=CD+C'D'$

$Z=D'$

Logic Diagram

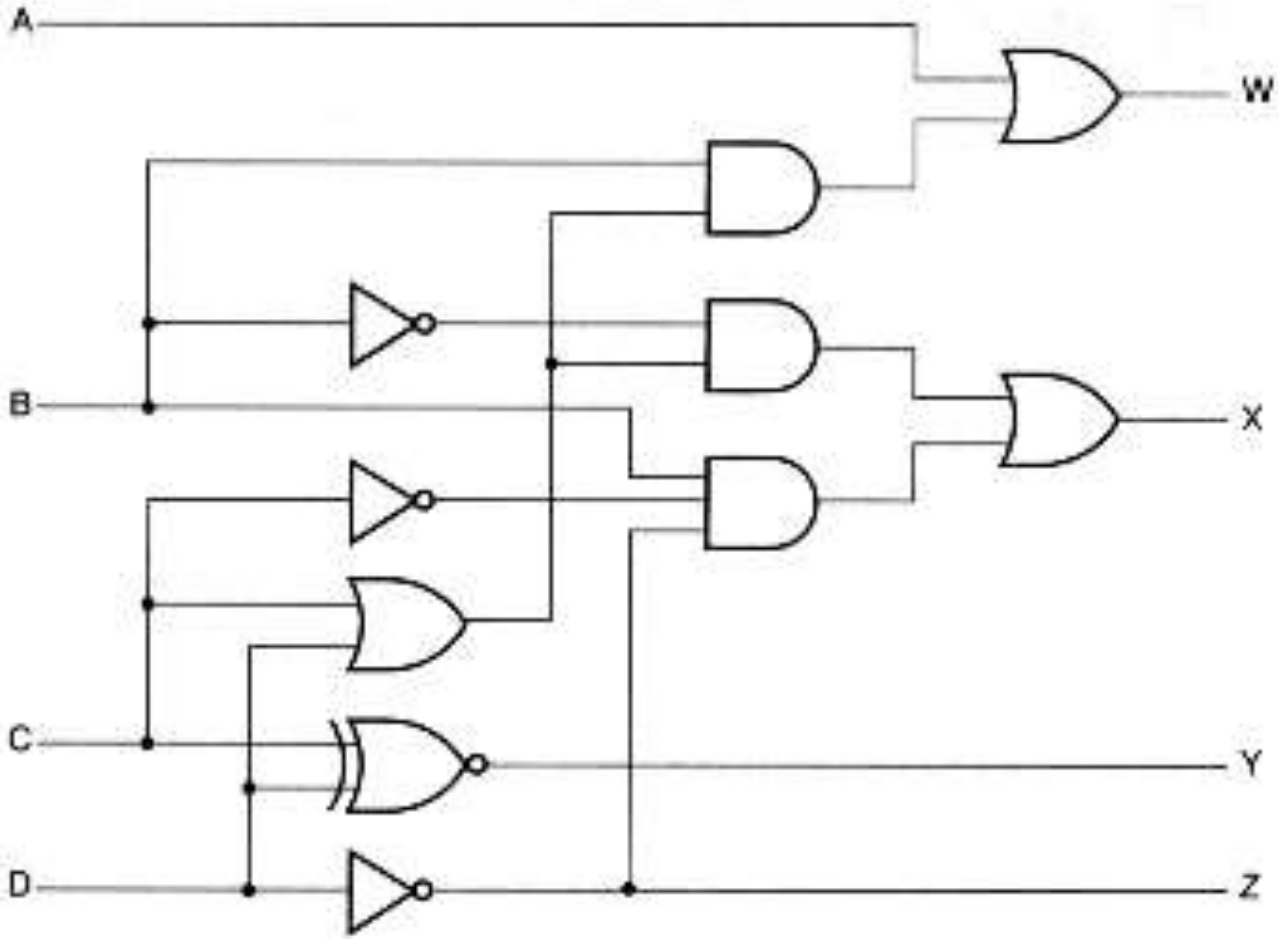

More problems on K-map

Three-Variable K-Maps

$f = \sum(0,4) = \overline{B}\,\overline{C}$

A \ BC	00	01	11	10
0	1	0	0	0
1	1	0	0	0

$f = \sum(4,5) = A\,\overline{B}$

A \ BC	00	01	11	10
0	0	0	0	0
1	1	1	0	0

$f = \sum(0,1,4,5) = \overline{B}$

A \ BC	00	01	11	10
0	1	1	0	0
1	1	1	0	0

$f = \sum(0,1,2,3) = \overline{A}$

A \ BC	00	01	11	10
0	1	1	1	1
1	0	0	0	0

$f = \sum(0,4) = \overline{A}\,C$

A \ BC	00	01	11	10
0	0	1	1	0
1	0	0	0	0

$f = \sum(4,6) = A\,\overline{C}$

A \ BC	00	01	11	10
0	0	0	0	0
1	1	0	0	1

More problems on K-map

$f = \sum(0,2) = \overline{A}\,\overline{C}$

A \ BC	00	01	11	10
0	1	0	0	1
1	0	0	0	0

$f = \sum(0,2,4,6) = \overline{C}$

A \ BC	00	01	11	10
0	1	0	0	1
1	1	0	0	1

More problems on K-map

AB \ CD	00	01	11	10
00	1	0	0	0
01	0	0	0	0
11	0	0	0	0
10	1	0	0	0

$f = \sum(0,8) = \overline{B} \bullet \overline{C} \bullet \overline{D}$

AB \ CD	00	01	11	10
00	0	0	0	0
01	0	1	0	0
11	0	1	0	0
10	0	0	0	0

$f = \sum(5,13) = B \bullet \overline{C} \bullet D$

AB \ CD	00	01	11	10
00	0	0	0	0
01	0	0	0	0
11	0	1	1	0
10	0	0	0	0

$f = \sum(13,15) = A \bullet B \bullet D$

AB \ CD	00	01	11	10
00	0	0	0	0
01	1	0	0	1
11	0	0	0	0
10	0	0	0	0

$f = \sum(4,6) = \overline{A} \bullet B \bullet \overline{D}$

AB \ CD	00	01	11	10
00	0	0	1	1
01	0	0	1	1
11	0	0	0	0
10	0	0	0	0

$f = \sum(2,3,6,7) = \overline{A} \bullet C$

AB \ CD	00	01	11	10
00	0	0	0	0
01	1	0	0	1
11	1	0	0	1
10	0	0	0	0

$f = \sum(4,6,12,14) = B \bullet \overline{D}$

More problems on K-map

AB \ CD	00	01	11	10
00	0	0	1	1
01	0	0	0	0
11	0	0	0	0
10	0	0	1	1

$f = \sum(2,3,10,11) = \overline{B} \bullet C$

AB \ CD	00	01	11	10
00	1	0	0	1
01	0	0	0	0
11	0	0	0	0
10	1	0	0	1

$f = \sum(0,2,8,10) = \overline{B} \bullet \overline{D}$

AB \ CD	00	01	11	10
00	0	0	0	0
01	1	1	1	1
11	0	0	0	0
10	0	0	0	0

$f = \sum(4,5,6,7) = \overline{A} \bullet B$

AB \ CD	00	01	11	10
00	0	0	1	0
01	0	0	1	0
11	0	0	1	0
10	0	0	1	0

$f = \sum(3,7,11,15) = C \bullet D$

AB \ CD	00	01	11	10
00	1	0	1	0
01	0	1	0	1
11	1	0	1	0
10	0	1	0	1

$f = \sum(0,3,5,6,9,10,12,15)$

$f = A \otimes B \otimes C \otimes D$

AB \ CD	00	01	11	10
00	0	1	0	1
01	1	0	1	0
11	0	1	0	1
10	1	0	1	0

$f = \sum(1,2,4,7,8,11,13,14)$

$f = A \oplus B \oplus C \oplus D$

More problems on K-map

AB \ CD	00	01	11	10
00	0	1	1	0
01	0	1	1	0
11	0	1	1	0
10	0	1	1	0

$f = \sum(1,3,5,7,9,11,13,15)$

$f = D$

AB \ CD	00	01	11	10
00	1	0	0	1
01	1	0	0	1
11	1	0	0	1
10	1	0	0	1

$f = \sum(0,2,4,6,8,10,12,14)$

$f = \overline{D}$

AB \ CD	00	01	11	10
00	0	0	0	0
01	1	1	1	1
11	1	1	1	1
10	0	0	0	0

$f = \sum(4,5,6,7,12,13,14,15)$

$f = B$

AB \ CD	00	01	11	10
00	1	1	1	1
01	0	0	0	0
11	0	0	0	0
10	1	1	1	1

$f = \sum(0,1,2,3,8,9,10,11)$

$f = \overline{B}$

Determining the Minimum SOP Expression from the Map

AB \ CD	00	01	11	10
00			1	1
01	1	1	1	1
11	1	1	1	1
10		1		

$\overline{A}C$

B

$A\overline{C}D$

$$B + \overline{A}C + A\overline{C}D$$

Example: Design a 3-input (A,B,C) digital circuit that will give at its output (X) a logic 1 only if the binary number formed at the input has more ones than zeros.

	Inputs			Output
	A	B	C	X
0	0	0	0	0
1	0	0	1	0
2	0	1	0	0
3	0	1	1	1
4	1	0	0	0
5	1	0	1	1
6	1	1	0	1
7	1	1	1	1

$$X = \sum(3,5,6,7)$$

A \ BC	00	01	11	10
0	0	0	1	0
1	0	1	1	1

$$X = AC + AB + BC$$

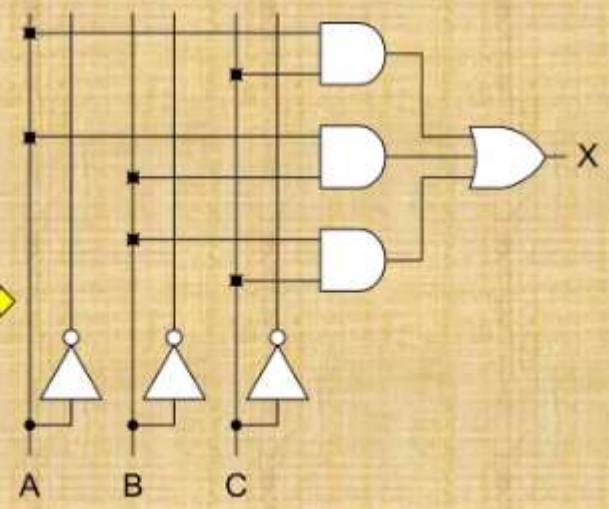

Example: Design a 4-input (A,B,C,D) digital circuit that will give at its output (X) a logic 1 only if the binary number formed at the input is between 2 and 9 (including).

	Inputs				Output
	A	B	C	D	X
0	0	0	0	0	0
1	0	0	0	1	0
2	0	0	1	0	1
3	0	0	1	1	1
4	0	1	0	0	1
5	0	1	0	1	1
6	0	1	1	0	1
7	0	1	1	1	1
8	1	0	0	0	1
9	1	0	0	1	1
10	1	0	1	0	0
11	1	0	1	1	0
12	1	1	0	0	0
13	1	1	0	1	0
14	1	1	1	0	0
15	1	1	1	1	0

$$X = \sum(2,3,4,5,6,7,8,9)$$

AB \ CD	00	01	11	10
00	0	0	1	1
01	1	1	1	1
11	0	0	0	0
10	1	1	0	0

$$X = \bar{A}C + \bar{A}B + A\bar{B}\bar{C}$$

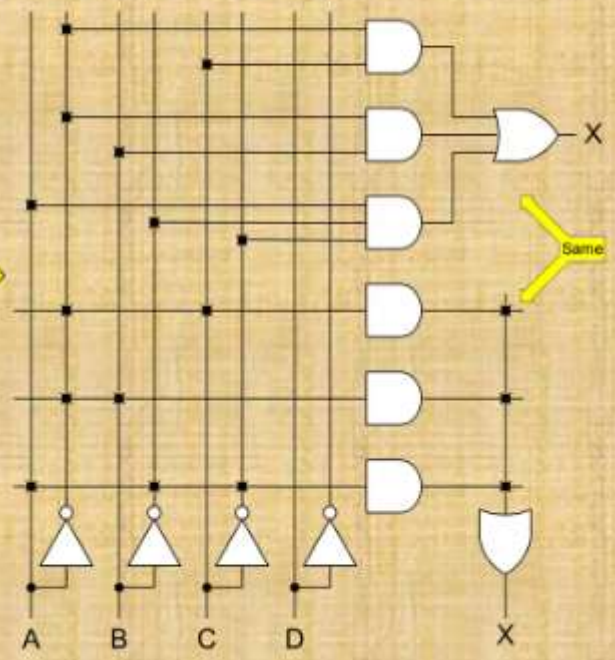

Quine-McCluskey Method

Find the implicants of F(A, B, C, D) = Σm(0, 2, 3, 6, 7, 8, 10, 12, 13) using QM method

Step 1: List all the minterms in their binary form. For each minterm, write the corresponding 4-bit binary representation.

Minterm	Binary Representation
m_0	0 0 0 0
m_2	0 0 1 0
m_3	0 0 1 1
m_6	0 1 1 0
m_7	0 1 1 1
m_8	1 0 0 0
m_{10}	1 0 1 0
m_{12}	1 1 0 0
m_{13}	1 1 0 1

Quine-McCluskey Method

Step 2: Arrange these binary minterms based on the number of '1's they contain. All minterms with the same count of '1's should be grouped.

Minterm	Binary Representation	
m_0	0 0 0 0	✓
m_2	0 0 1 0	✓
m_8	1 0 0 0	✓
m_3	0 0 1 1	✓
m_6	0 1 1 0	✓
m_{10}	1 0 1 0	✓
m_{12}	1 1 0 0	✓
m_7	0 1 1 1	✓
m_{13}	1 1 0 1	✓

Step 3:
Compare each binary number with every term in the adjacent next higher category and if they differ only by one position, put a check mark and copy the term into the next column with '–' in the position that they differed.

Minterms	Binary Representation	
0, 2	0 0 - 0	✓
0, 8	- 0 0 0	✓
2, 3	0 0 1 -	✓
2, 6	0 - 1 0	✓
2, 10	- 0 1 0	✓
8, 10	1 0 - 0	✓
8, 12	1 - 0 0	
3, 7	0 - 1 1	✓
6, 7	0 1 1 -	✓
12, 13	1 1 0 -	

Step 4:

Apply the same process described in step 3 for the resultant column and continue these cycles until a single pass through the cycle yields no further elimination of literals.

Minterms	Binary Representation
0, 2, 8, 10	- 0 - 0
2, 3, 6, 7	0 - 1 -

The implicants of the function

$\bar{B}\bar{D}$, $\bar{A}$C, A $\bar{C}\bar{D}$ and AB$\bar{C}$

Quine-McCluskey Method

Determine the minterms for f(a,b,c,d)=∑m(0,1,2,5,6,7,8,9,10,14) using QM method

Step 1

group 0	0	0000
group 1	1	0001
	2	0010
	8	1000
group 2	5	0101
	6	0110
	9	1001
	10	1010
group 3	7	0111
	14	1110

Step 2

group 0	0 0000	✓
group 1	1 0001	✓
	2 0010	✓
	8 1000	✓
group 2	5 0101	✓
	6 0110	✓
	9 1001	✓
	10 1010	✓
group 3	7 0111	✓
	14 1110	✓

Step 3

0, 1	000–	✓
0, 2	00–0	✓
0, 8	–000	✓
1, 5	0–01	
1, 9	–001	✓
2, 6	0–10	✓
2, 10	–010	✓
8, 9	100–	✓
8, 10	10–0	✓
5, 7	01–1	
6, 7	011–	
6, 14	–110	✓
10, 14	1–10	✓

Step 4

0, 1, 8, 9	–00–
0, 2, 8, 10	–0–0
~~0, 8, 1, 9~~	~~–00–~~
~~0, 8, 2, 10~~	~~–0–0~~
2, 6, 10, 14	-- 10
~~2, 10, 6, 14~~	~~-- 10~~

Implicants of the function are

$c\bar{d}$, $\bar{b}\bar{d}$,$\bar{b}\bar{c}$, $\bar{a}\bar{c}$d, $\bar{a}bd$, $\bar{a}bc$

THANK YOU