NITTE (Deemed to be University) | NMAM INSTITUTE OF TECHNOLOGY

Applied Digital Logic Design (EC1002-2)

Dr. CHAITRA S N
Department of ISE
N.M.A.M. Institute of Technology, Nitte

Syllabus

UNIT – IV

Sequential Logic Circuits: Basic Bistable Element, SR Flip-Flop, D Flip Flop, JK Flip Flop, T Flip Flop, Master Slave JK Flip Flop, Characteristic Equations, Conversion of Flip Flops.

06Hrs

Combinational v/s Sequential

Output only depends on the present input	Output depends on present input and past output
Memory element is absent	Memory element is present
No clock signal is applied	Clock signal is required

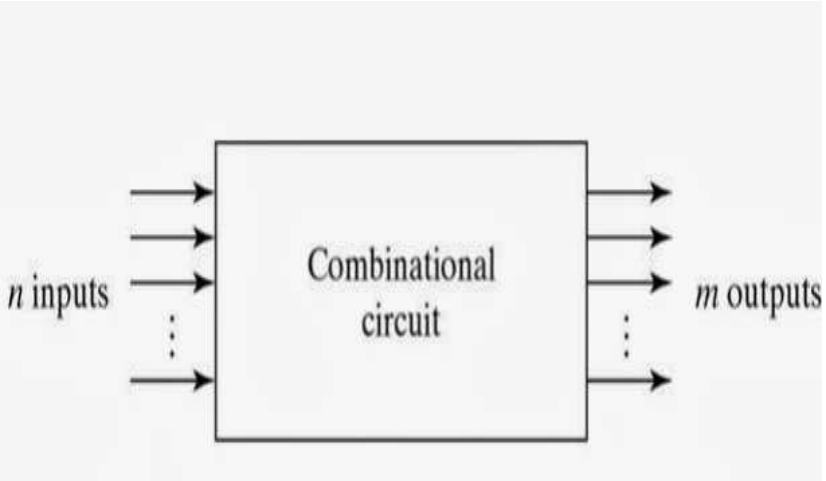

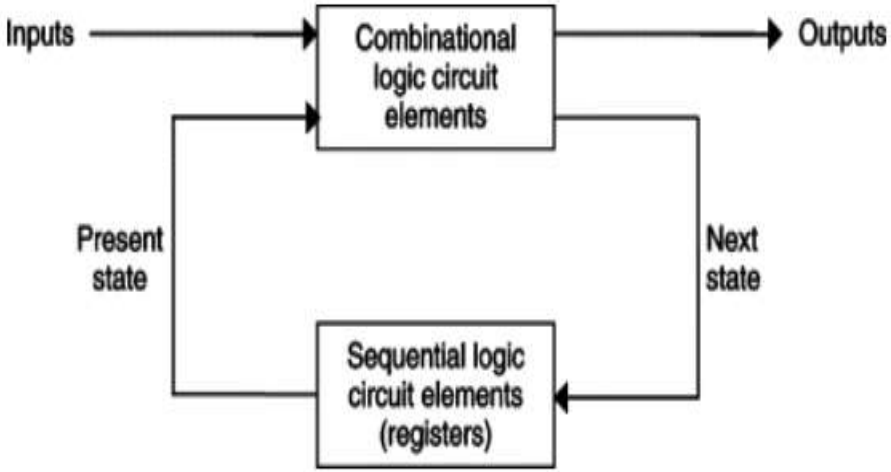

Introduction

- The outputs at any instant are dependent not only upon the inputs present at that instant but also upon the past history (or sequence) of inputs
  - Sequential circuits are said to have memory
  - All sequential circuits require the existence of feedback

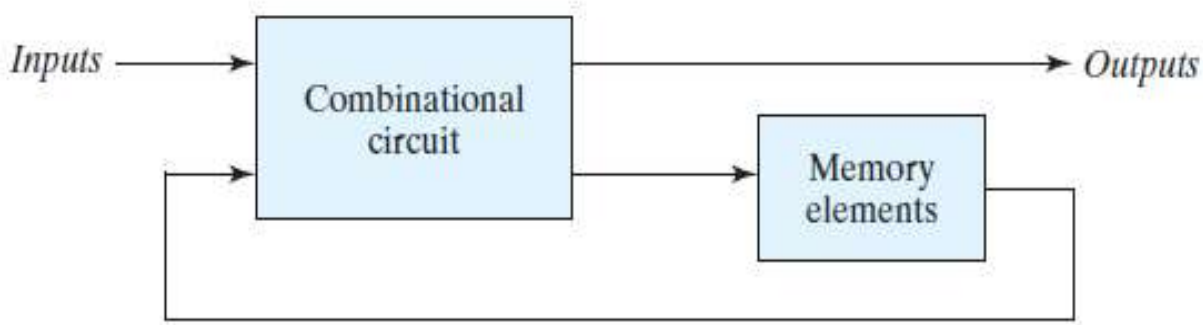

Sequential Circuit Types

- A Synchronous Sequential Circuit is one in which its behaviour is determined by the values of signals at only discrete instants of time
- Generally have a master-clock that effectively samples the input data to determine network behaviour
- An Asynchronous Sequential Circuit is one in which the network is immediately affected by input signal changes.

Basic Bi-stable Element

- Simplest sequential circuit or storage element
- It is one bit memory cell
- Constructed with two inverters connected sequentially in a loop
- It has no inputs and two outputs labeled Q and Q’.
- Since the circuit has no inputs, we cannot change the values of Q and Q’.
- However, Q will take on whatever value it happens to be when the circuit is first powered up.

Basic Bistable element

- 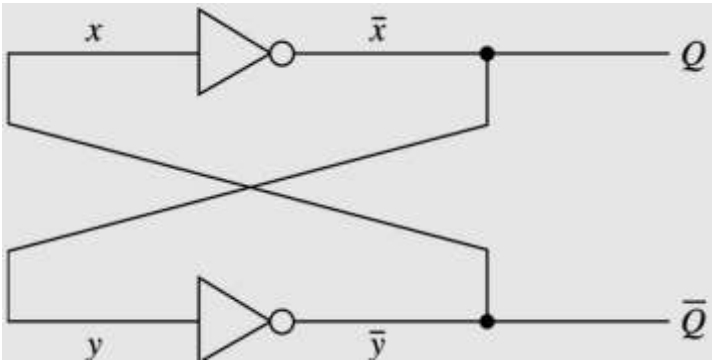

Basic Bistable element

- It is used to store binary symbols.
- Stored symbol is referred to as *content* or *state* of the element
- When the device is storing ‘1’ it is said to be ‘set’ or in ‘1-state’. When storing ‘0’ it is said to be ‘reset’ or in ‘0-state’

Latches

- Latch is an electronic logic circuit with **two stable states**.
- Latch has a **feedback** path to **retain the information**. Hence a latch can be a **memory device**.
- Latch can store one bit of information as long as the device is **powered on**.
- When enable is asserted, latch immediately changes the stored information when the input is changed i.e. they are level triggered devices. It continuously samples the inputs when the enable signal is on.

Flip-Flop

- The Flip-flop remains in a given state as long as the **power is applied** and until **input signal** applied causes its output to change.
- Inputs to Flip-flop can be of two types
  - Synchronous or gated inputs: Signal change produces an change in output only when some control signal occurs
  - Asynchronous or direct inputs: Signal change produces an immediate change in output

Difference between Latches and Flip Flops

sno	Flip Flops	Latch
1]	It is a Edge triggered device.	It is a Level triggered device.
2]	It requires clock to function.	It doesn't require clock to function.
3]	It is made up of Latches and logic gates.	It is made up of only logic gate blocks.
4]	It checks input continously but changes the output only when triggered by clock.	It checks input continously and changes the output immediately w.r.t. input.
5]	Circuit Diagram: 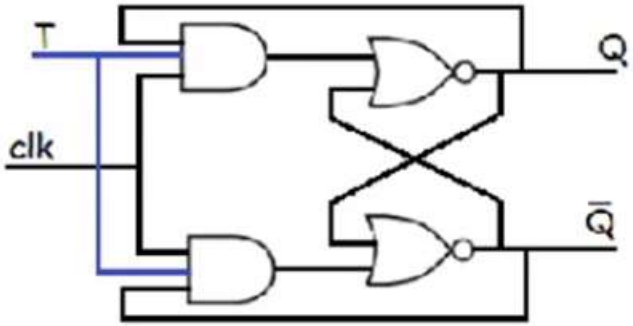	Circuit Diagram: 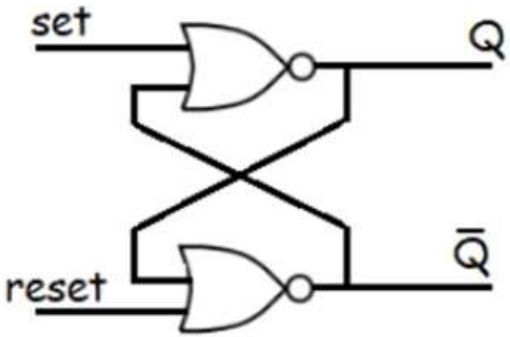

SR Latch

SR: Set-Reset Latch – a circuit with:

- 2 cross-coupled NOR gates
- 2 input S for SET and R for RESET
- 2 output Q, Q’

Q	Q’	STATE
1	0	Set
0	1	Reset

SR Latch
HOLD/LATCH Mode

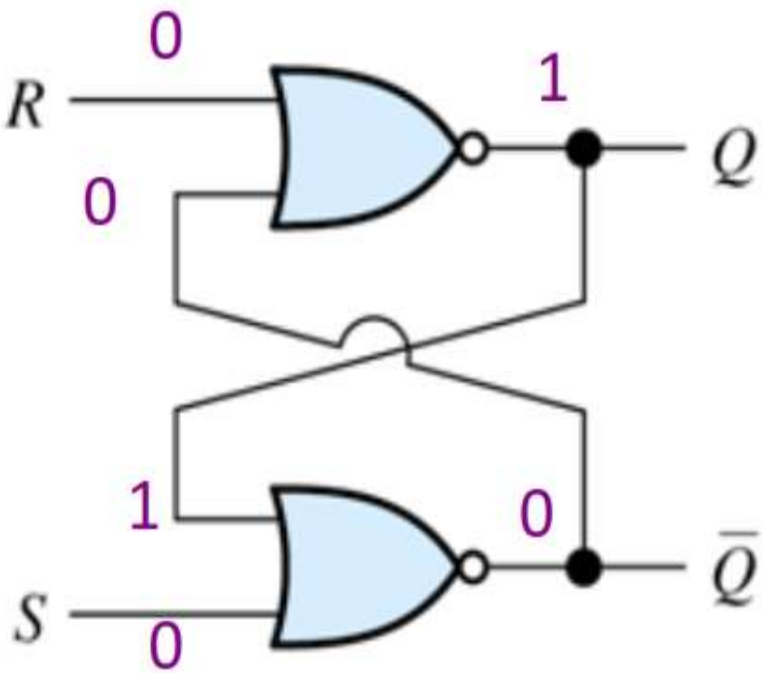

- **S = 0, R = 0**; This is the normal resting state of the circuit and it has no effect on the output states. Q and Q' will remain in **whatever state** they were in **prior** to the occurrence of this input condition. It works in HOLD (no change) mode operation.

SR-FLIP-FLOP			
R	S	Q	$\bar{Q}$
0	0	Last state	
0	1		
1	0		
1	1		

SR Latch
SET Mode

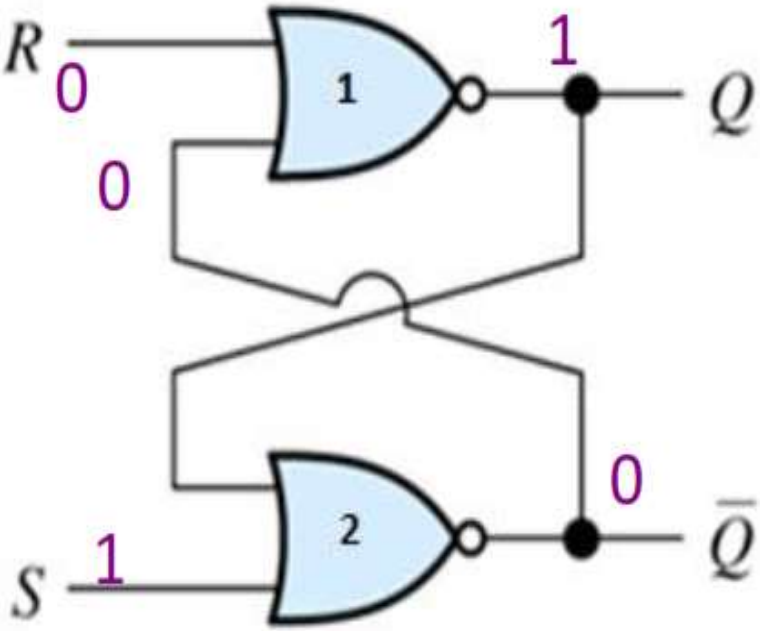

- Consider the input **S = 1**. Any time the input of a NOR gate is 1 the output is 0. So, the output of the second NOR gate is 0, i.e. Q' = 0.
- Q' = 0 is fed back into the input of the first NOR gate. So, with **R = 0**, the output of the first NOR gate is 1, i.e. Q=1.

SR-FLIP-FLOP			
R	S	Q	$\bar{Q}$
0	0	Last state	
0	1	1	0
1	0		
1	1		

SR Latch
RESET Mode

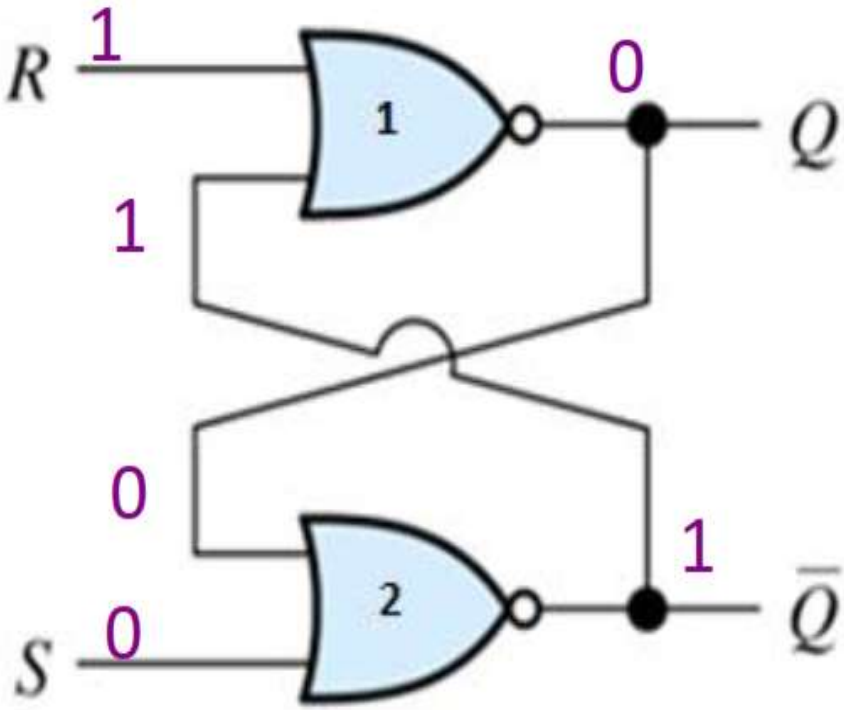

- Consider the input **R = 1**. Any time the input of a NOR gate is 1 the output is 0. So, the output of the first NOR gate is 0, i.e. Q = 0.
- Q = 0 is fed back into the input of the second NOR gate. So, with **S = 0**, the output of the second NOR gate is 1, i.e. Q'=1.

SR-FLIP-FLOP			
R	S	Q	$\bar{Q}$
0	0	Last state	
0	1	1	0
1	0	0	1
1	1		

SR Latch
INVALID Mode

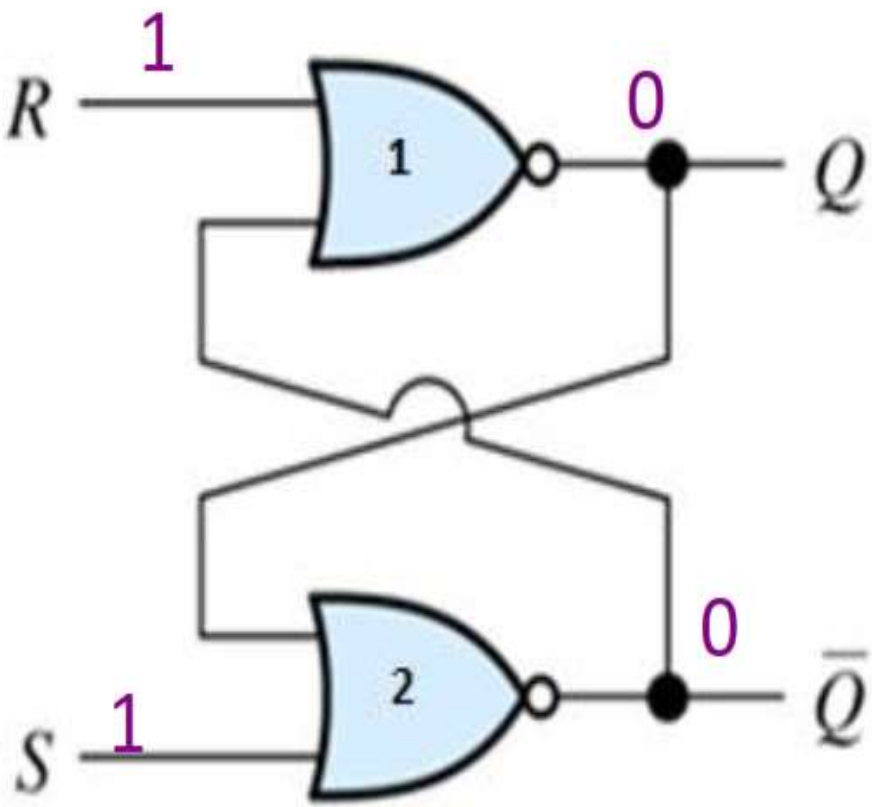

- **S = 1**, **R = 1**; This condition tries to set and reset the NOR gate latch at the same time, it produces **Q = Q' = 0**. This is an unexpected condition and is not used.
- The two outputs should be the inverse of each other.

SR-FLIP-FLOP			
R	S	Q	$\bar{Q}$
0	0	Last state	
0	1	1	0
1	0	0	1
1	1	Illegal	

R-S Latch [summary]

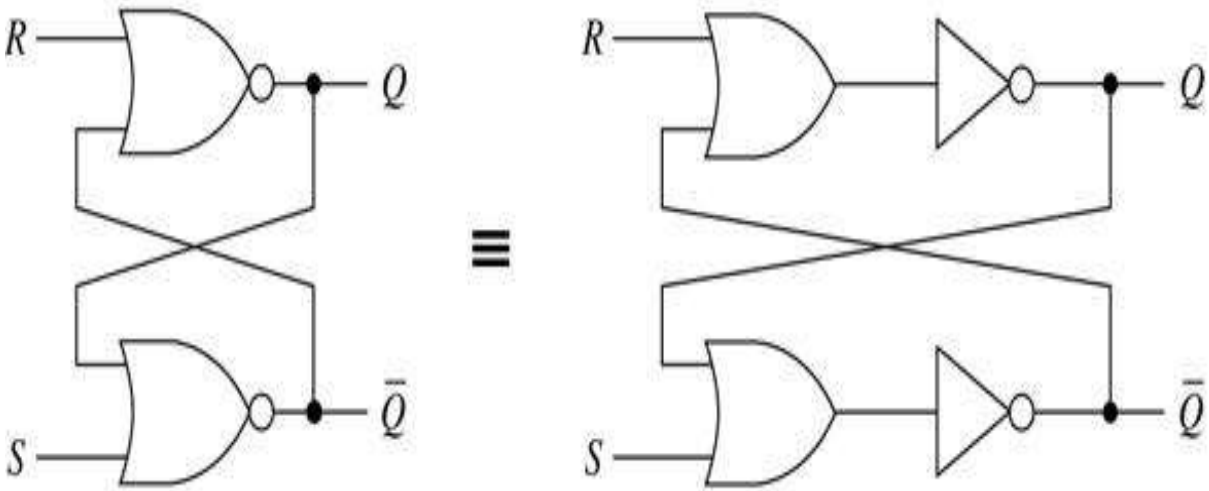

(a)

Inputs		Outputs	
S	R	Q^+	$\bar{Q}^+$
0	0	Q	$\bar{Q}$
0	1	0	1
1	0	1	0
1	1	0^*	0^*

*Unpredictable behavior will result if inputs return to 0 simultaneously

(b)

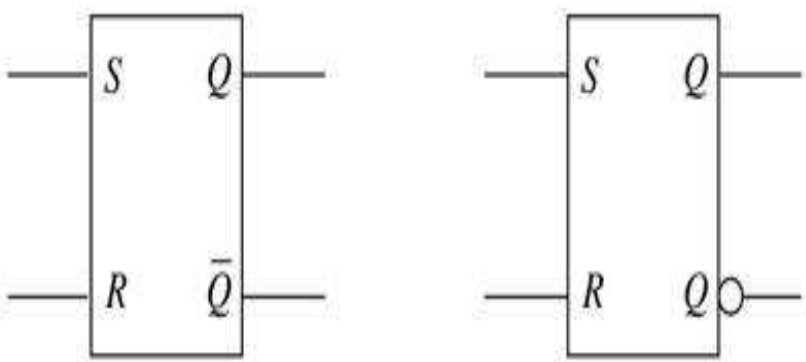

(c)

Timing Diagram of SR latch

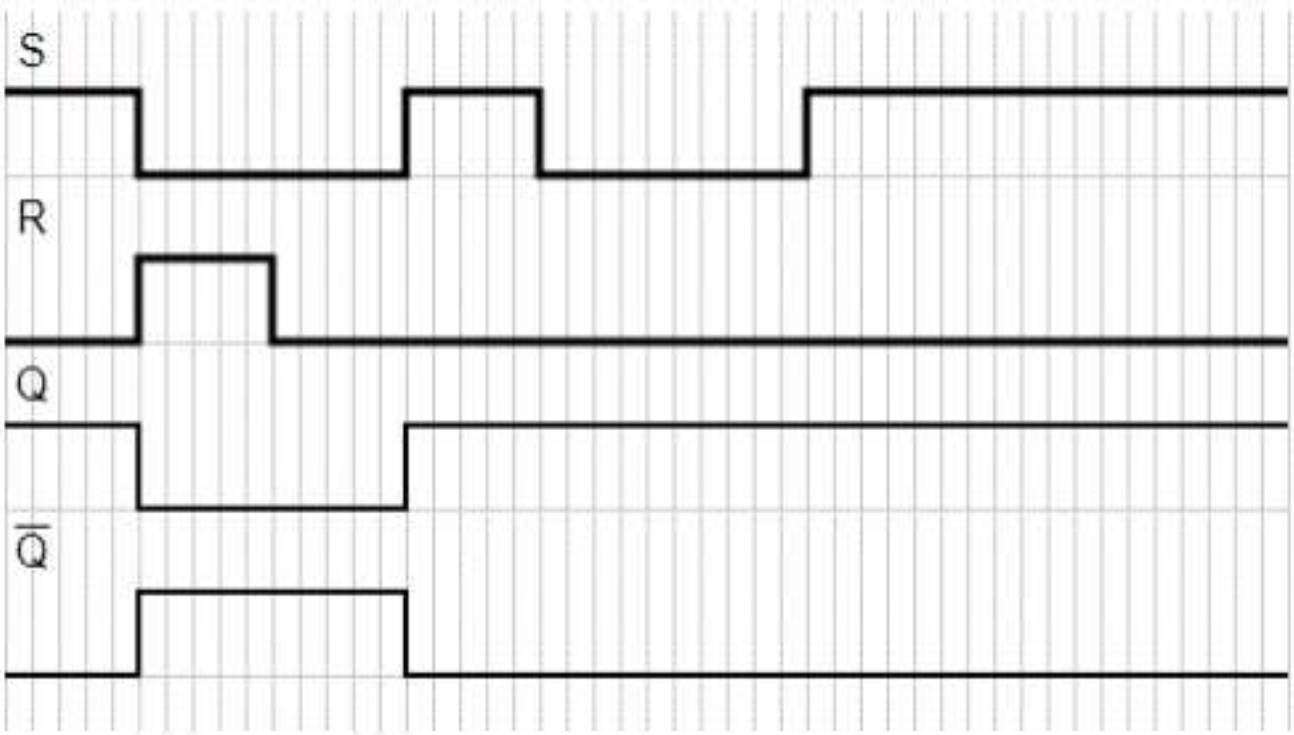

Quick Revision
NAND gate & Truth Table:

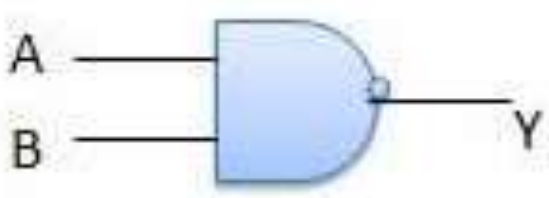

Inputs		Output
A	B	$\overline{AB}$
0	0	1
0	1	1
1	0	1
1	1	0

S'R' Latch
INVALID Mode

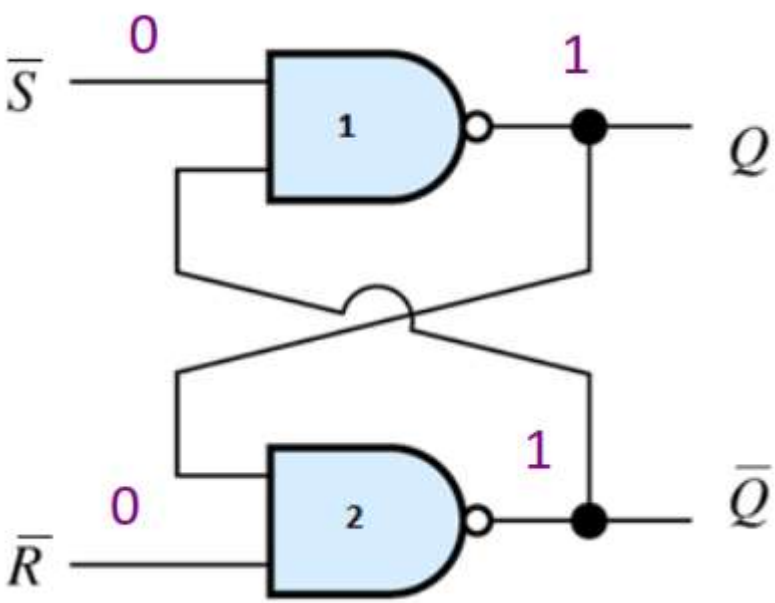

- The analysis of a SR Flip Flop NAND:
- **S = 0**, **R = 0**; This condition tries to set and reset the NAND gate latch at the same time.
- It produces Q = Q' =1

S'R' Latch
INVALID Mode

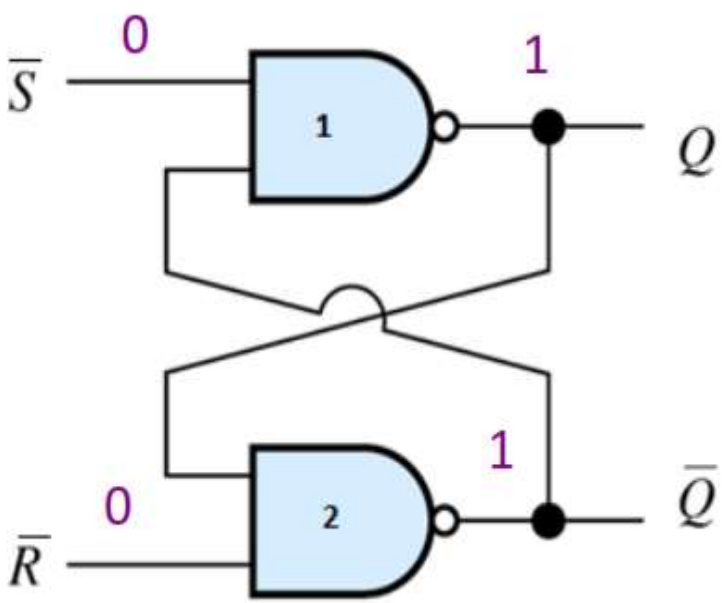

- This is an unexpected condition, since the two outputs should be inverses of each other.
- If the inputs are returned to 1 simultaneously, the output states are unpredictable.
- This input condition should not be used and when circuits are constructed, the designer should make sure that this condition.

  S=R=0 never arises. It is called INVALID/ PROHIBITED

S'R' Latch
INVALID Mode

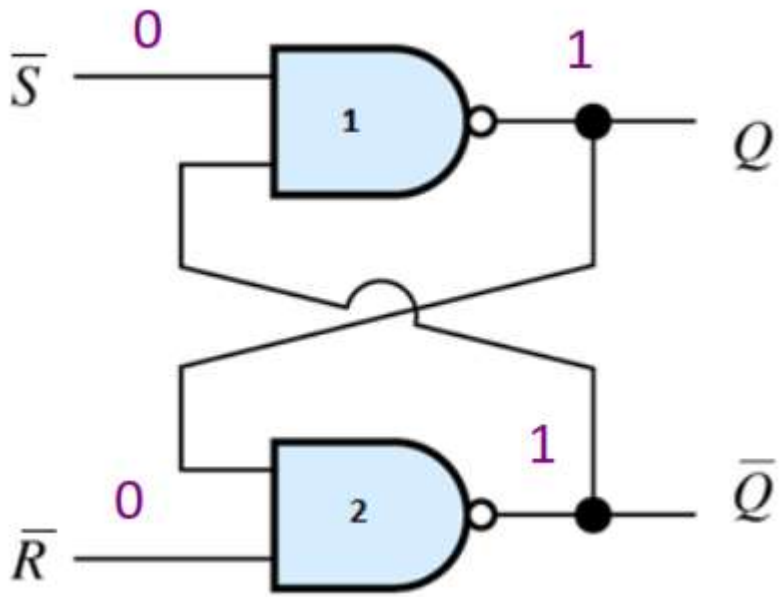

Truth Table

Set	Reset	Output
1	1	No change*
0	1	Q=1
1	0	Q=0
0	0	Invalid state

* can be used for data storage

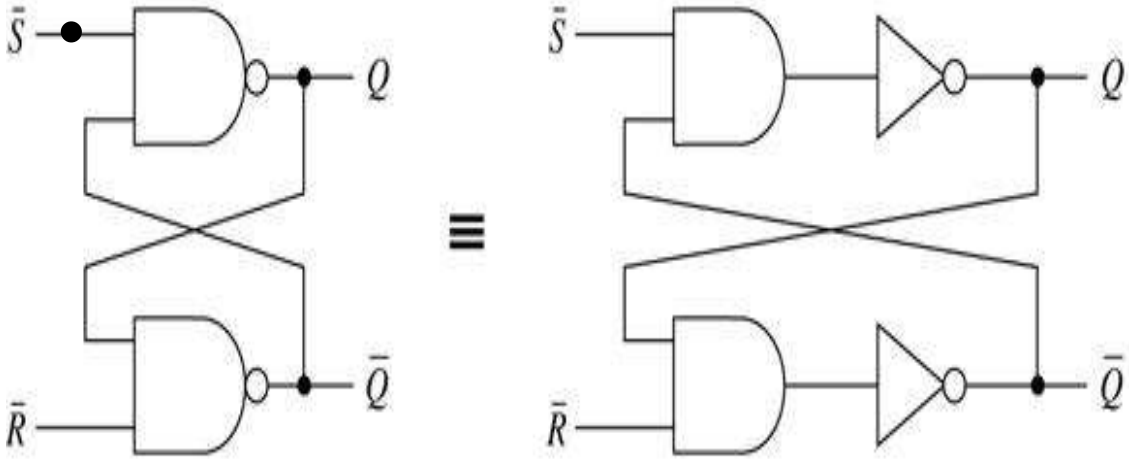

(a)

Inputs		Outputs	
$\bar{S}$	$\bar{R}$	Q^+	$\bar{Q}^+$
0	0	1*	1*
0	1	1	0
1	0	0	1
1	1	Q	$\bar{Q}$

*Unpredictable behavior will result if inputs return to 1 simultaneously

(b)

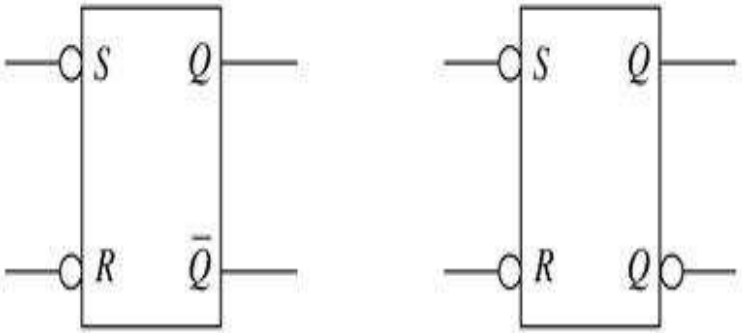

(c)

Timing diagram for S'R' LATCH

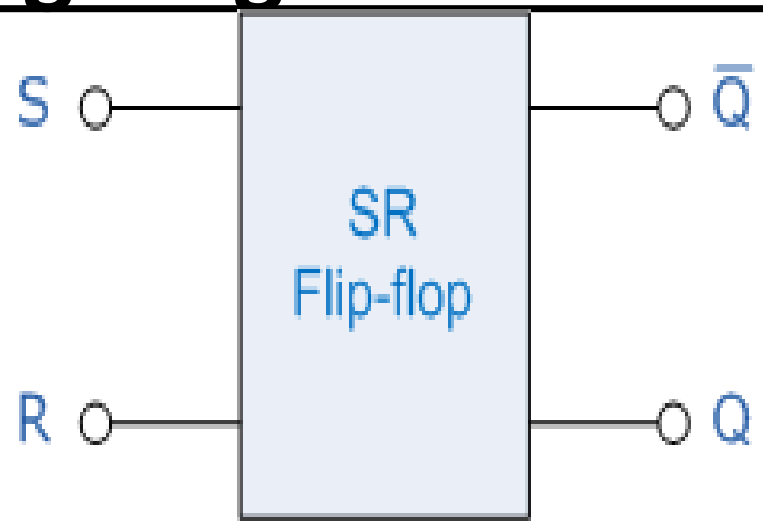

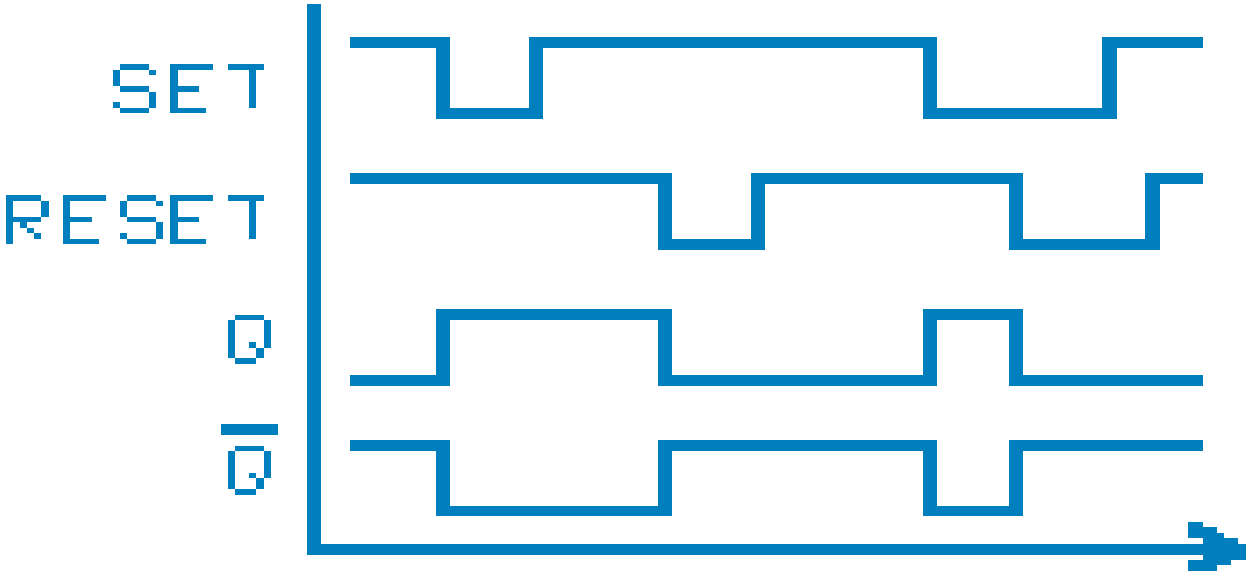

FUNCTION OF SEQUENTIAL LOGIC

- Example:

  For a given waveform, sketch the output waveform of an active-LOW SR latch.

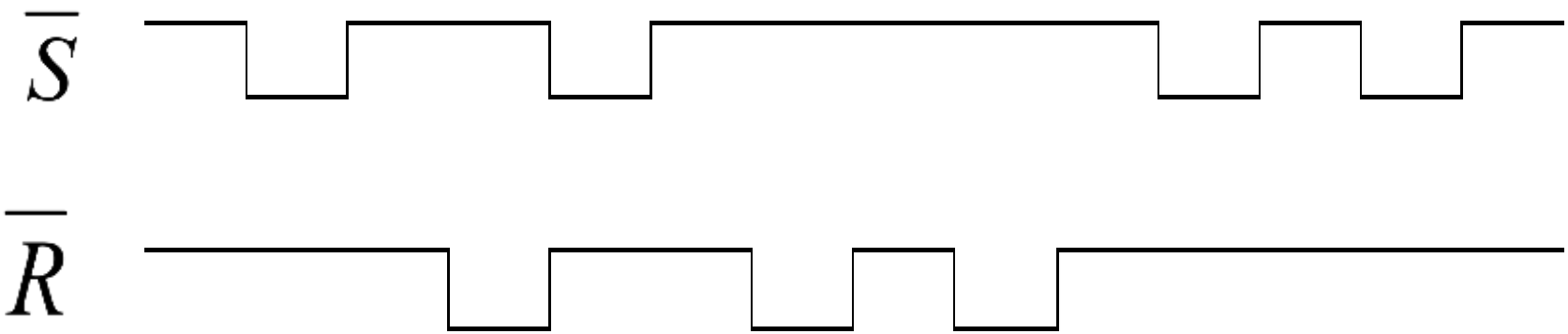

FUNCTION OF SEQUENTIAL LOGIC

- Solution:

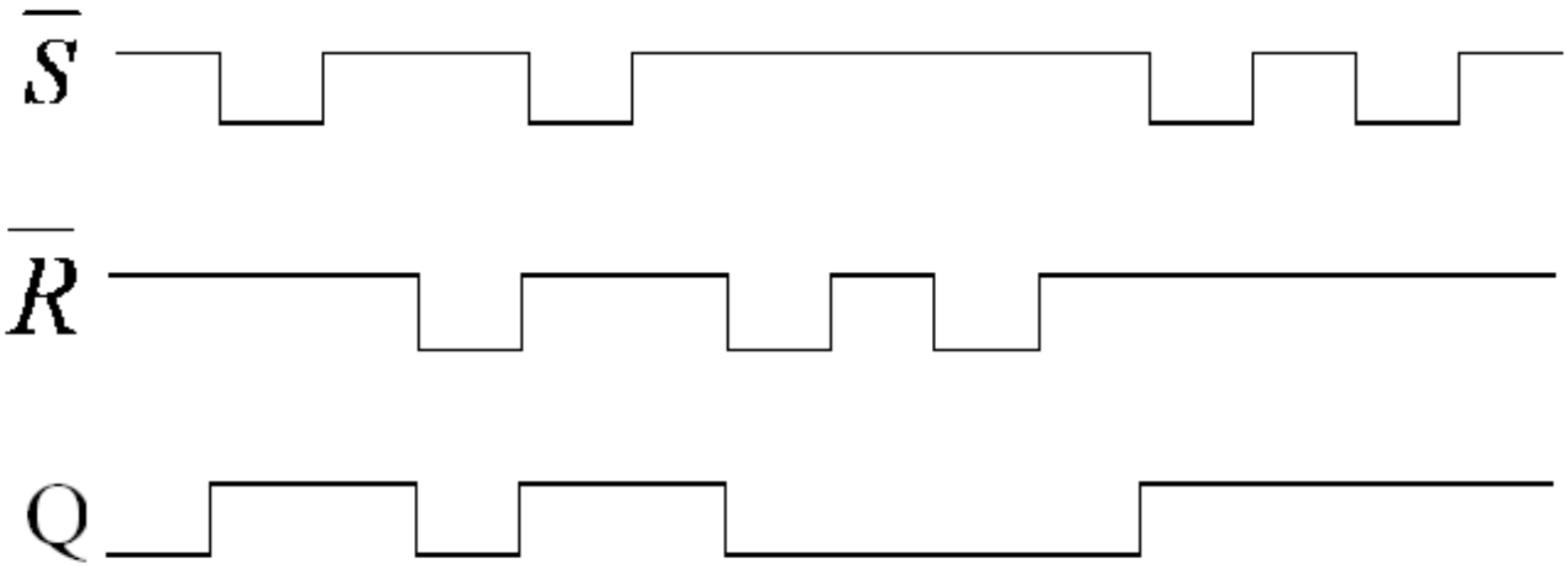

SR Latch

- SR with active HIGH input

S	R	Q	Q'	
0	0	NC	NC	No change. Latch remained in present state.
1	0	1	0	Latch SET.
0	1	0	1	Latch RESET.
1	1	0	0	Invalid condition.

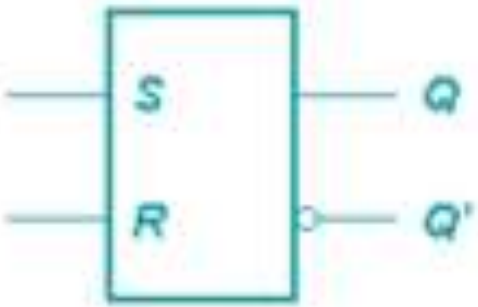

- S'R' with active LOW input

S'	R'	Q	Q'	
1	1	NC	NC	No change. Latch remained in present state.
0	1	1	0	Latch SET.
1	0	0	1	Latch RESET.
0	0	1	1	Invalid condition.

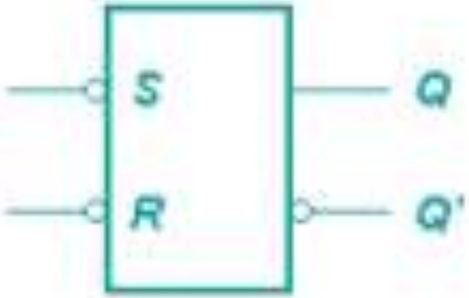

Gated SR Latch

- Constructed by adding two Controller NAND gates to the $\bar{S}\bar{R}$ *latch*

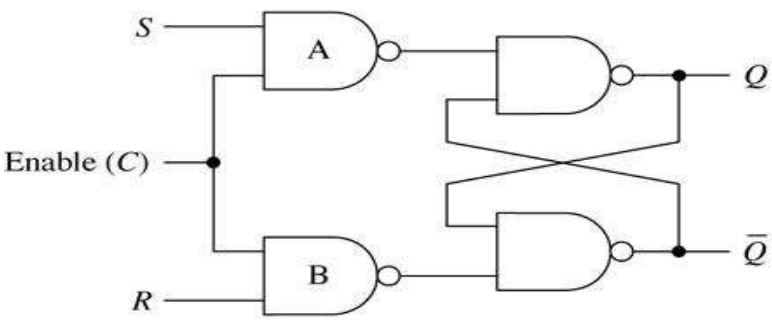

(a)

Inputs			Outputs	
S	R	C	Q^+	$\bar{Q}^+$
0	0	1	Q	$\bar{Q}$
0	1	1	0	1
1	0	1	1	0
1	1	1	1*	1*
X	X	0	Q	$\bar{Q}$

*Unpredictable behavior will result if S and R return to 0 simultaneously or C returns to 0 while S and R are 1

(b)

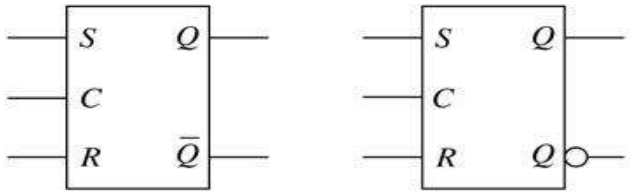

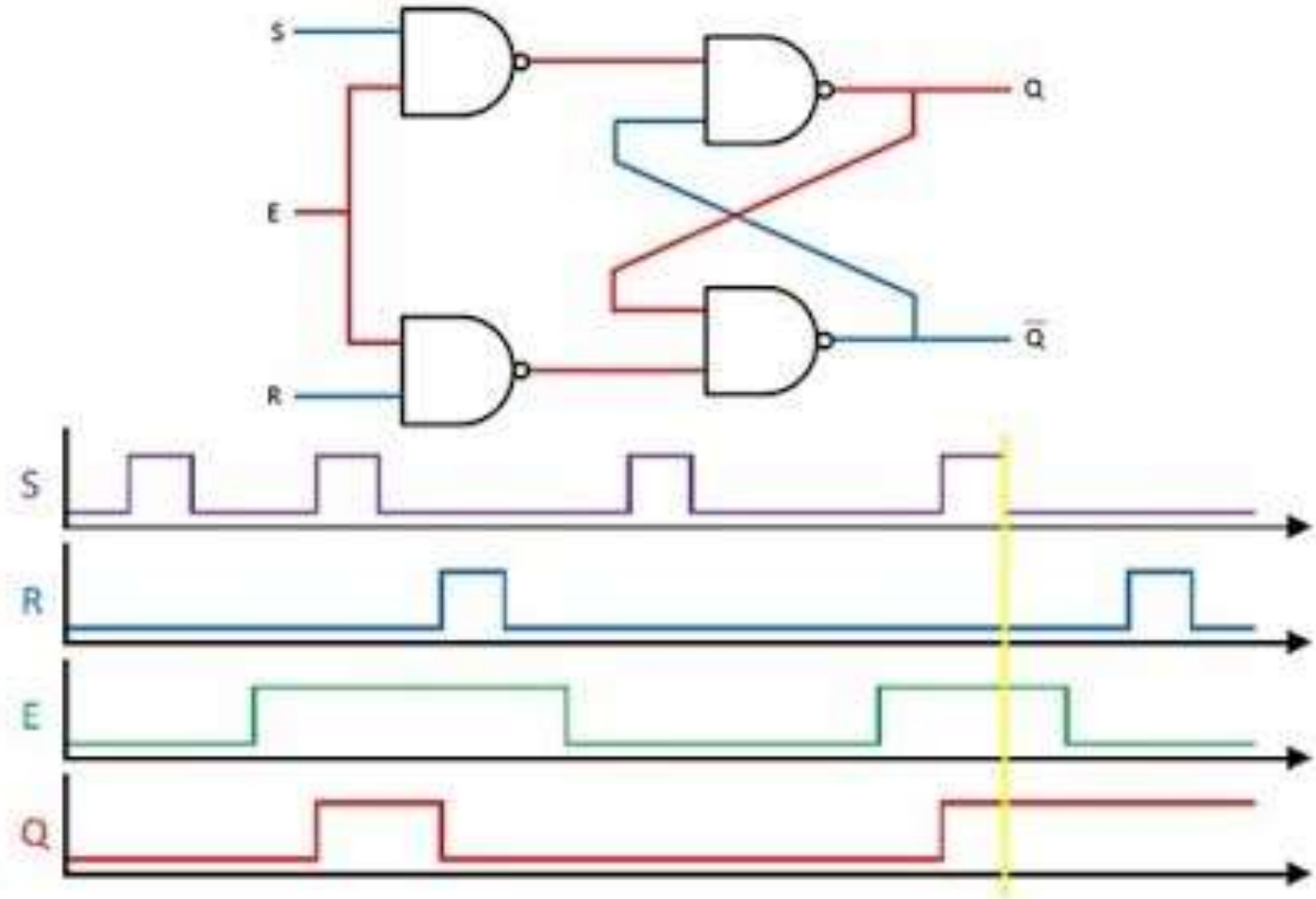
S
E
R
Q
$\overline{Q}$
S
R
E
Q

SR flip-flop

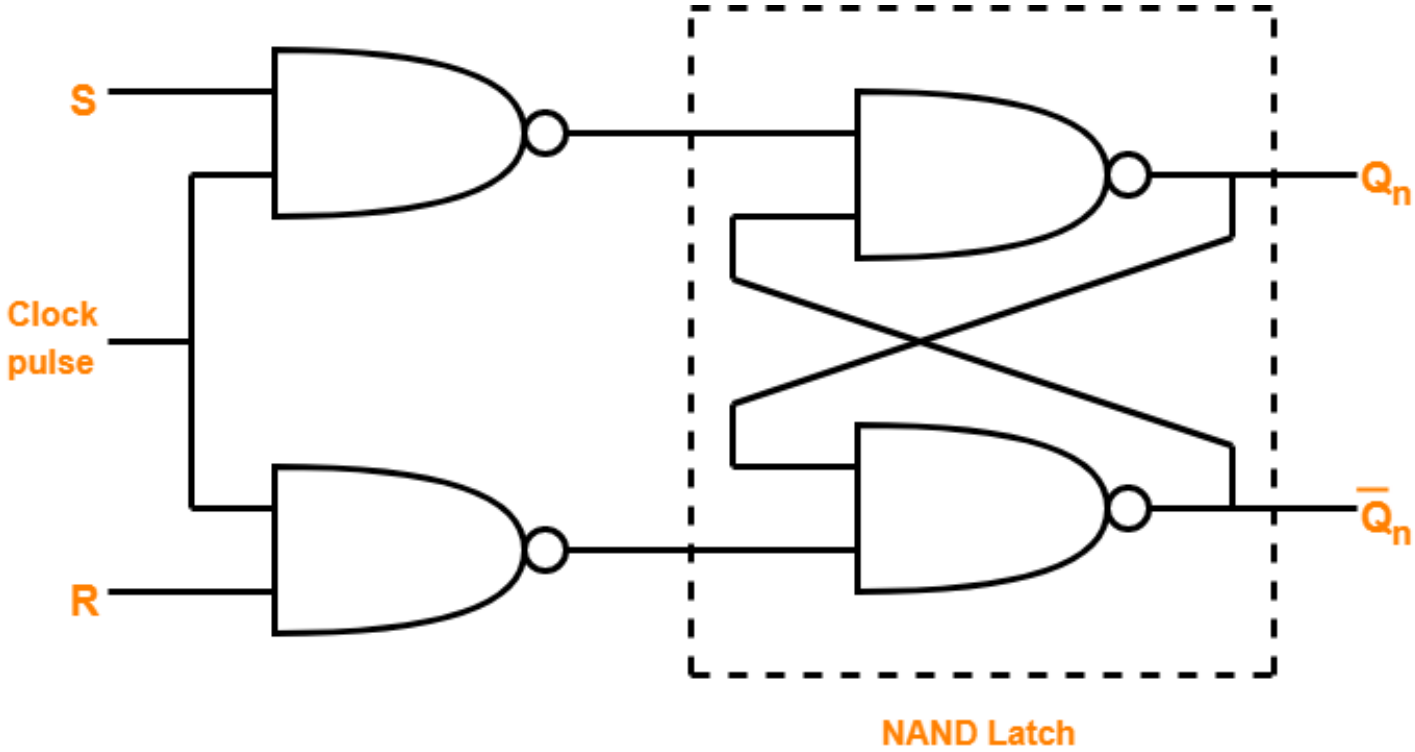

SR Flip Flop Using NAND Latch

Symbol of SR flip-flop

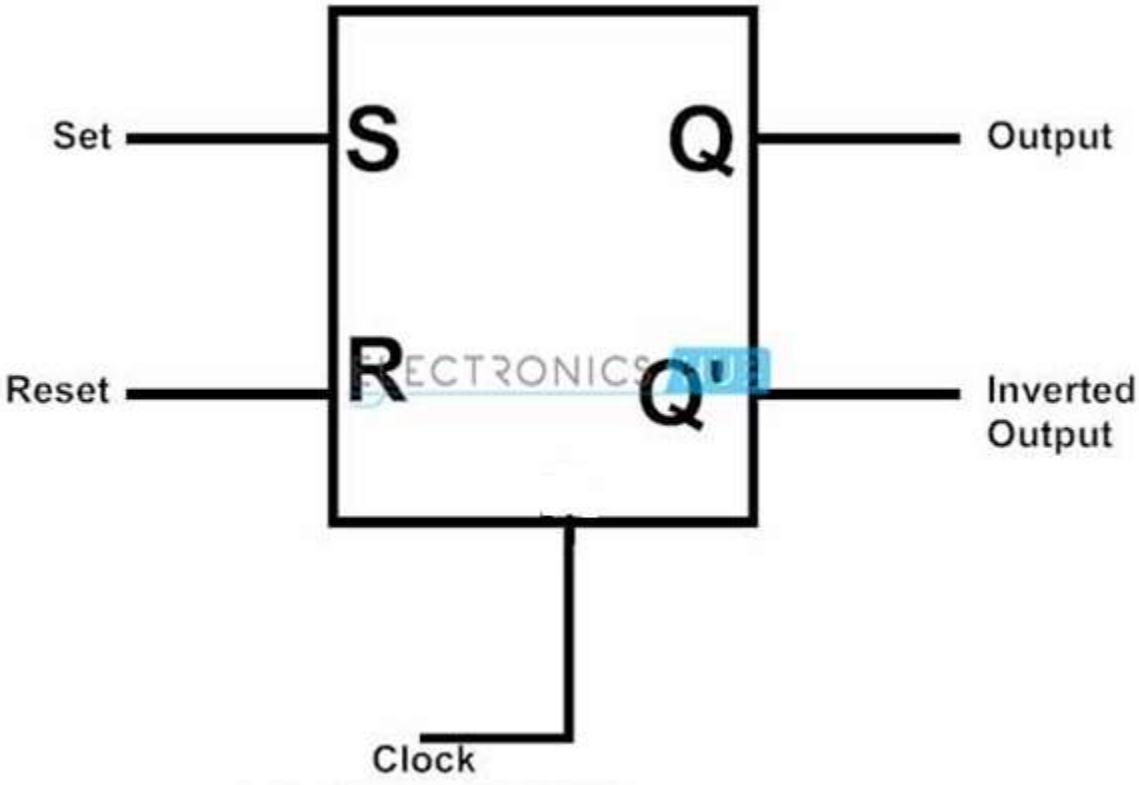

Gated D Latch

•

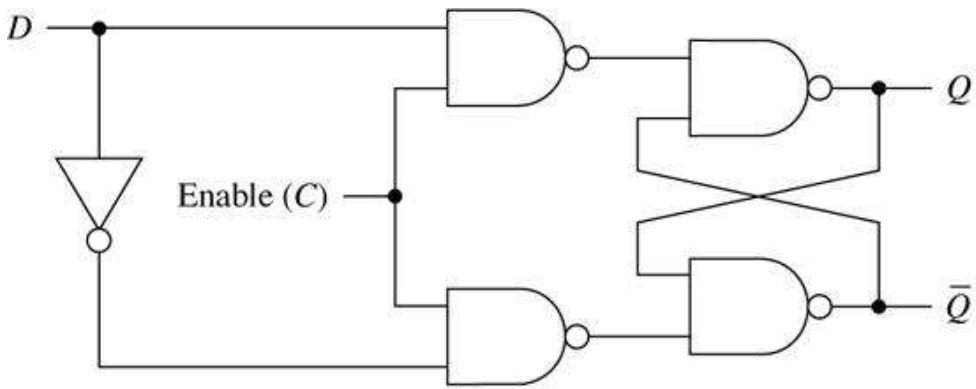

(a)

Inputs		Outputs	
D	C	Q^+	$\overline{Q}^+$
0	1	0	1
1	1	1	0
X	0	Q	$\overline{Q}$

(b)

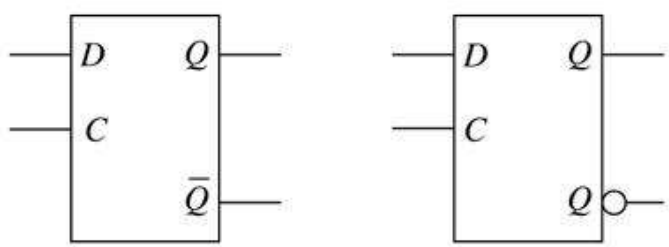

(c)

Timing Diagram

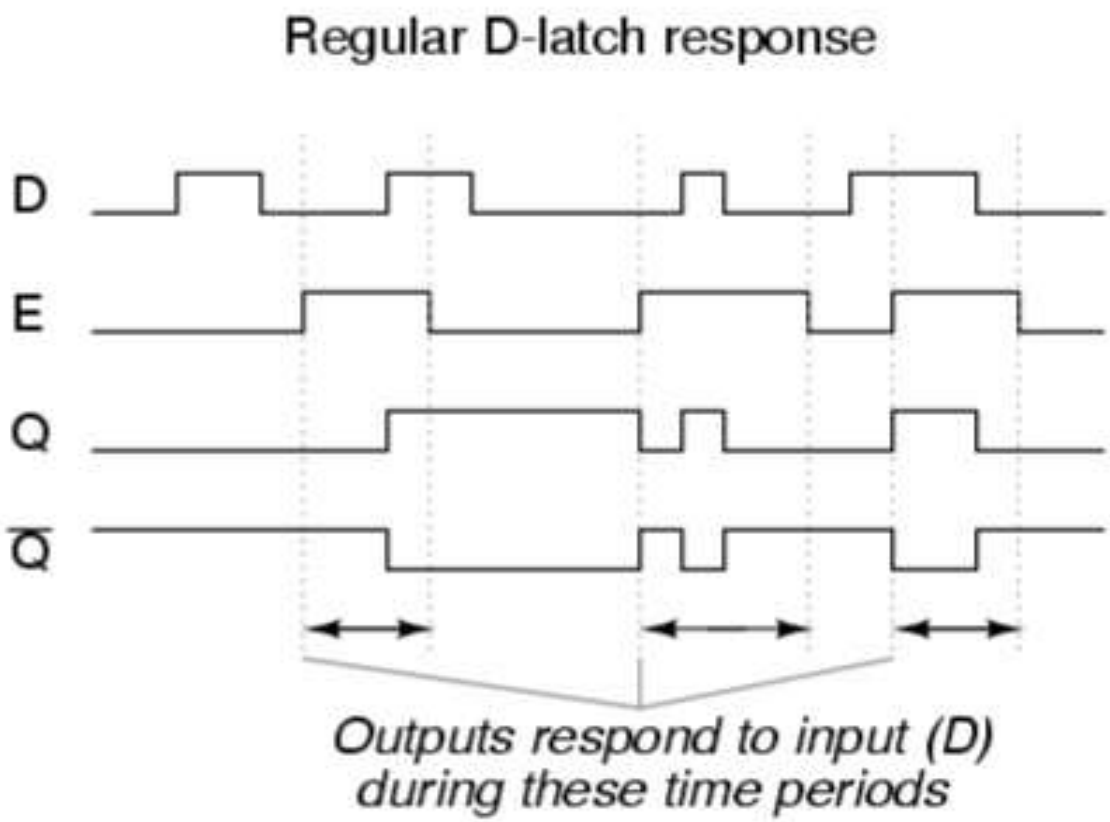

D flip-flop

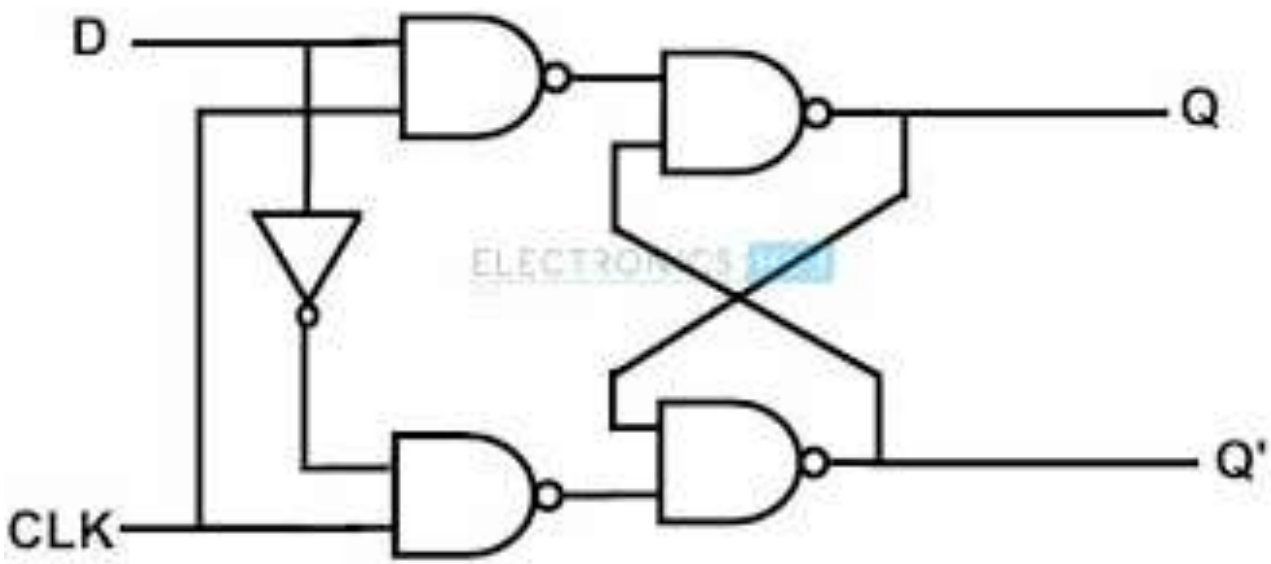

Symbol of D flip-flop

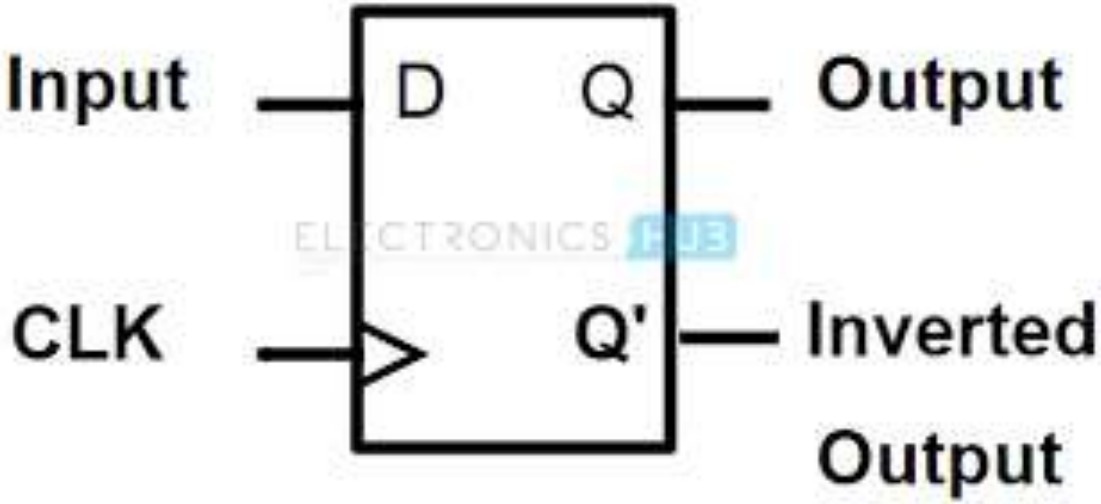

$\bar{Q}$

Clocked JK Flip Flop

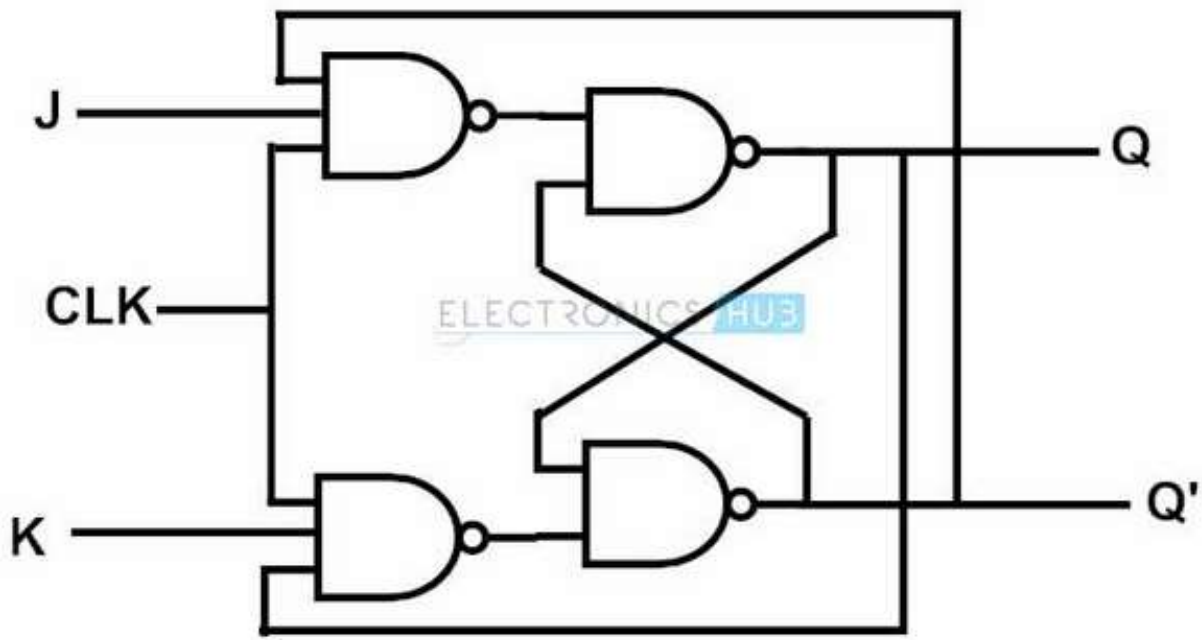

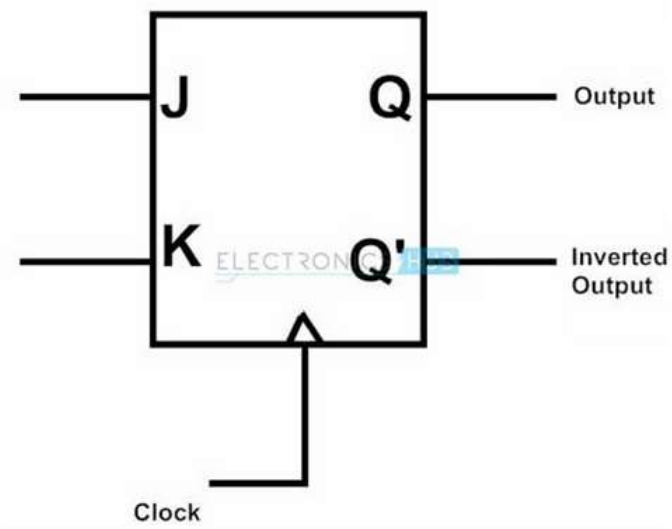

Function Table

Clk	J	K	Q^+	$\bar{Q}^+$
0	X	X	Q	$\bar{Q}$
1	0	0	Q	$\bar{Q}$
1	0	1	0	1
1	1	0	1	0
1	1	1	$\bar{Q}$	Q

Timing diagram of JK FF

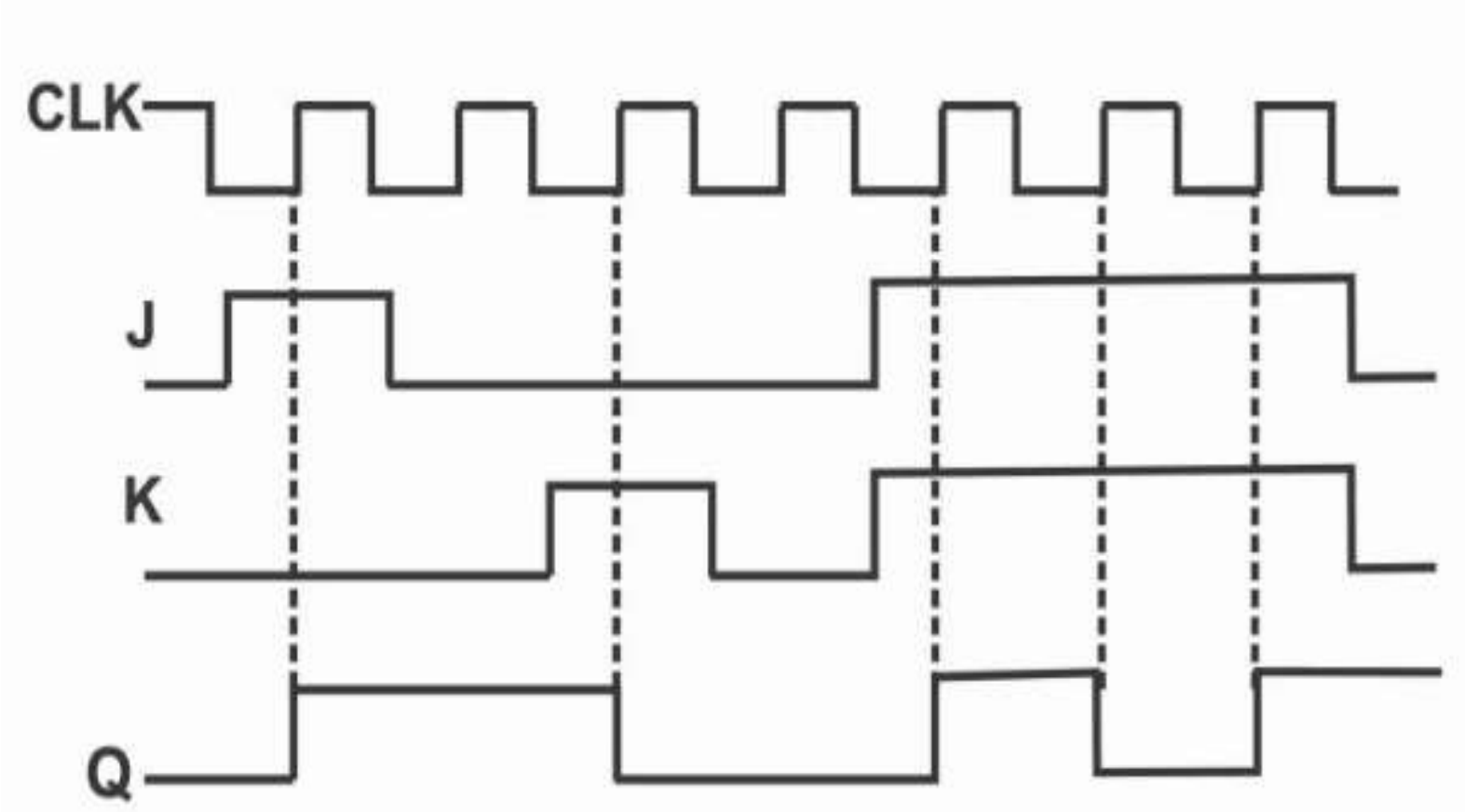

Clocked T-Flip Flop

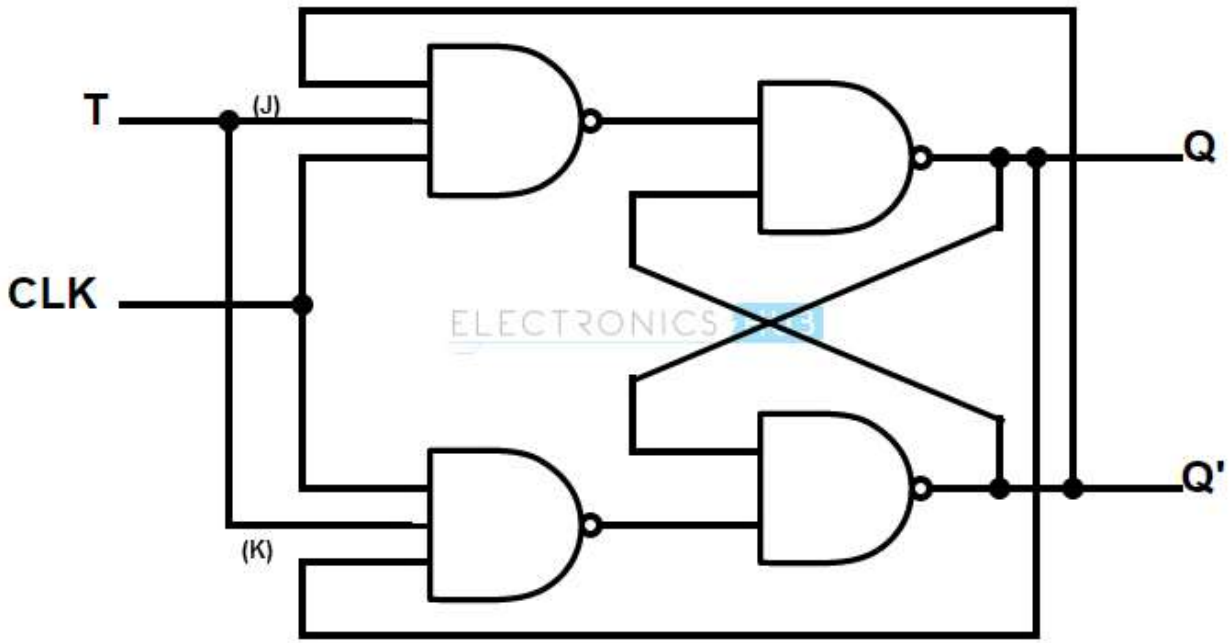

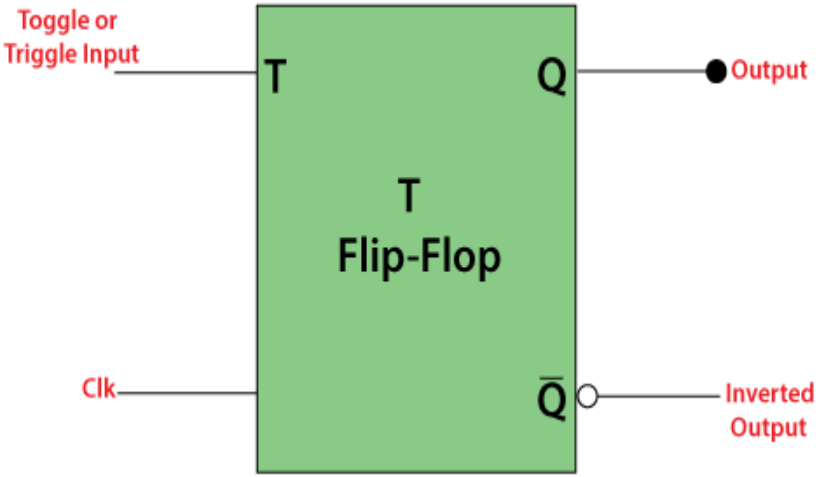

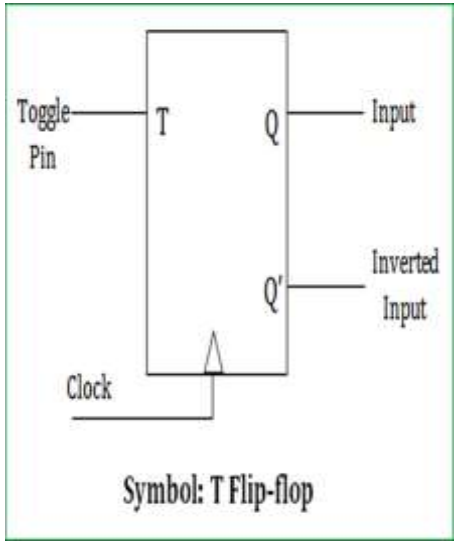

Truth Table

Clk	T	Q^+	$\bar{Q}^+$
0	X	Q	$\bar{Q}$
1	0	Q	$\bar{Q}$
1	1	$\bar{Q}$	Q

Timing diagram of T FF

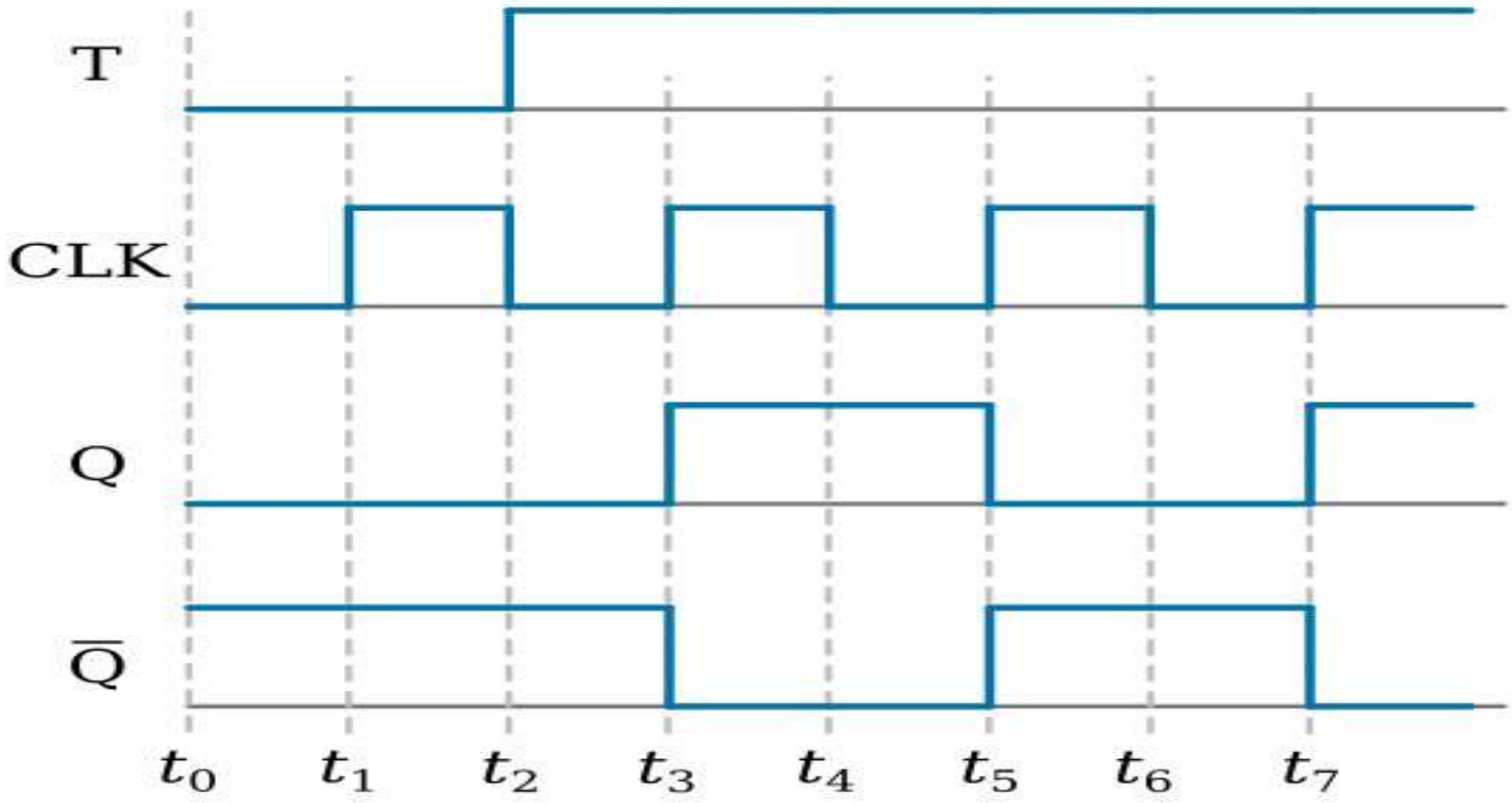

Timing diagram

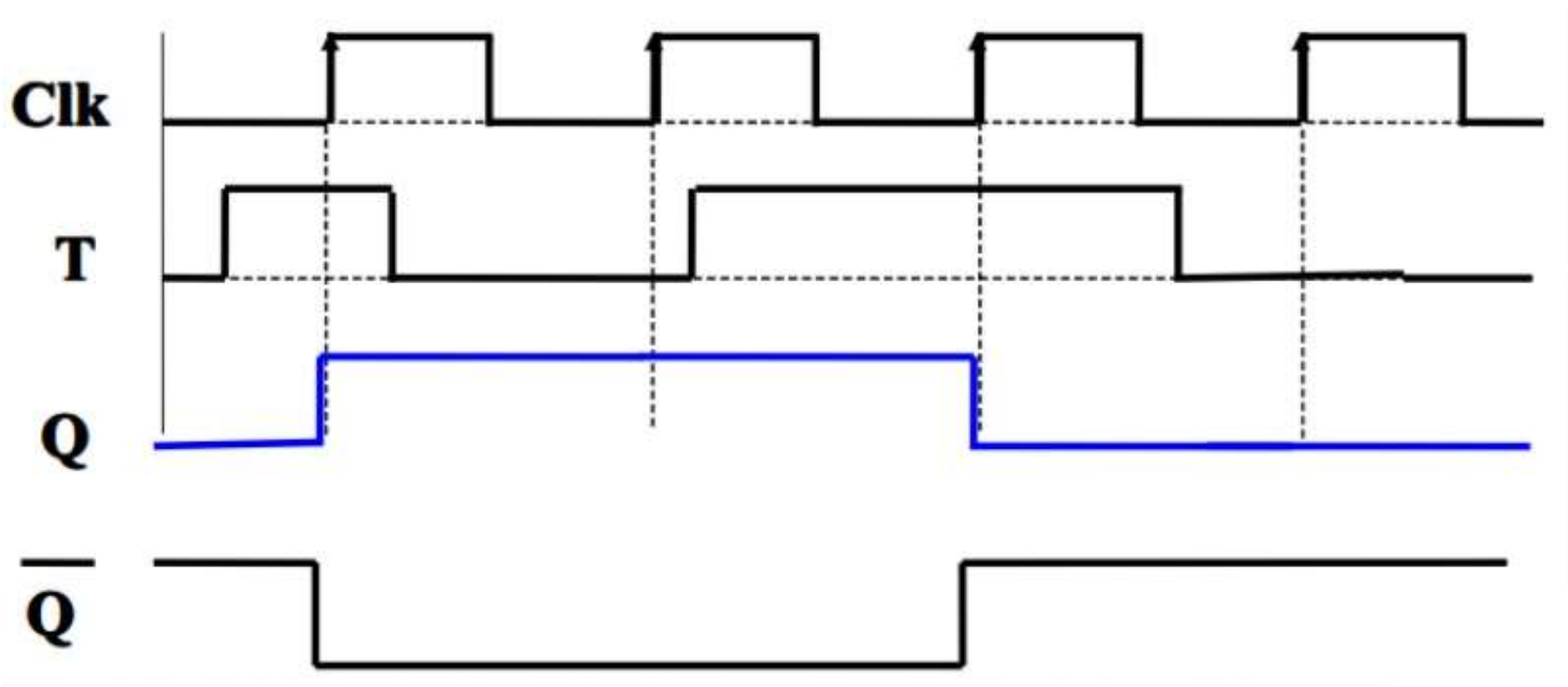

Master-Slave Flip-Flops

- Also known as pulse-triggered flip-flops
- Necessary in case where it is necessary to sense current state while allowing new state information to be entered.
- It consists of two cascaded sections.
- First section is the master and the second is the slave
- Information is entered into the master on one edge or level of a control signal and is transferred to the slave on the next edge or level of control signal

Master slave SR Flip-flop

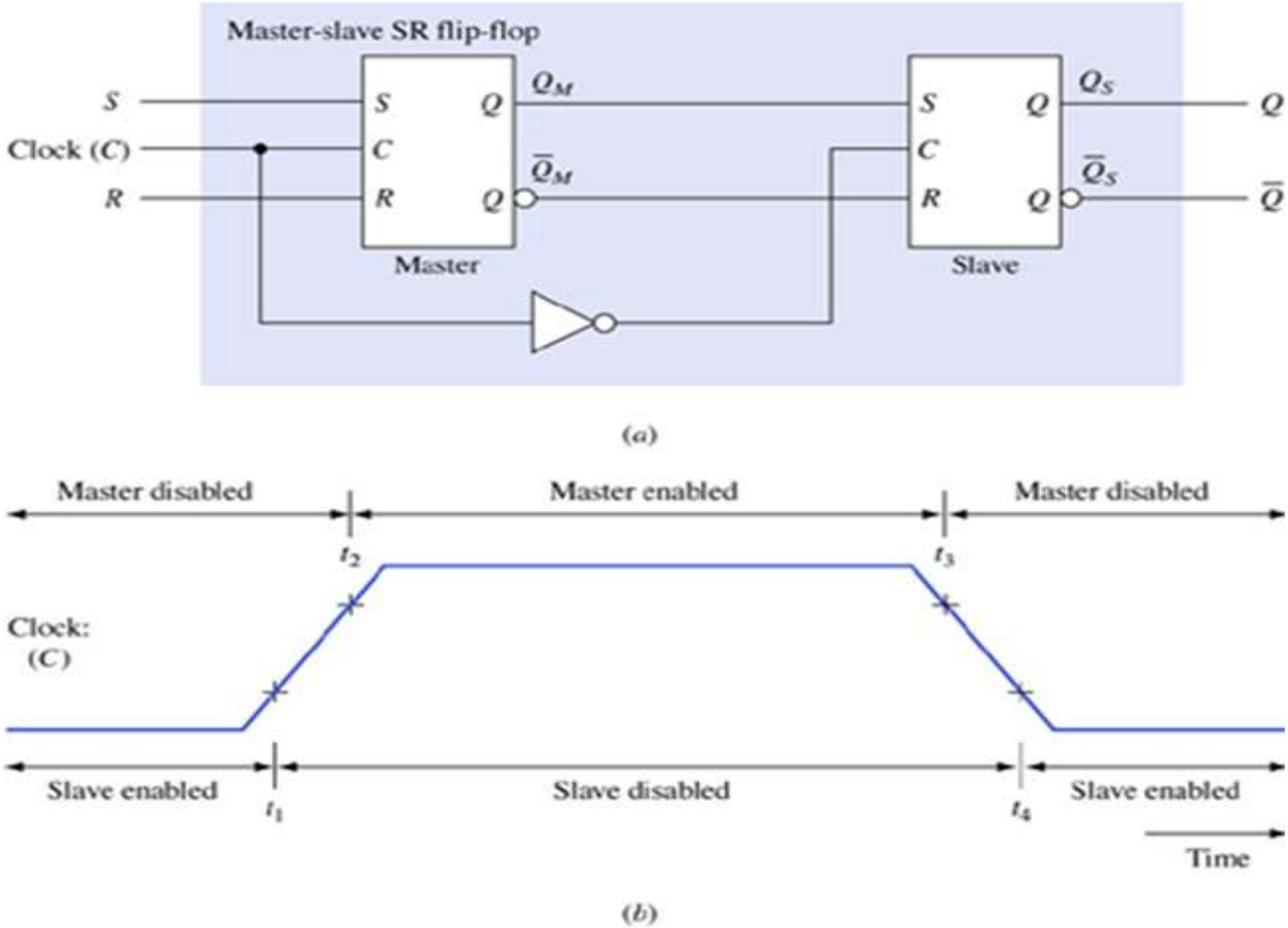

Master slave SR Flip-flop

- Constructed from two gated SR latches and an inverter.
- Timing behaviour is referenced to the control line

Inputs			Outputs	
S	R	C	Q^+	$\overline{Q}^+$
0	0	⎍	Q	$\overline{Q}$
0	1	⎍	0	1
1	0	⎍	1	0
1	1	⎍	Undefined	Undefined
X	X	0	Q	$\overline{Q}$

(c)

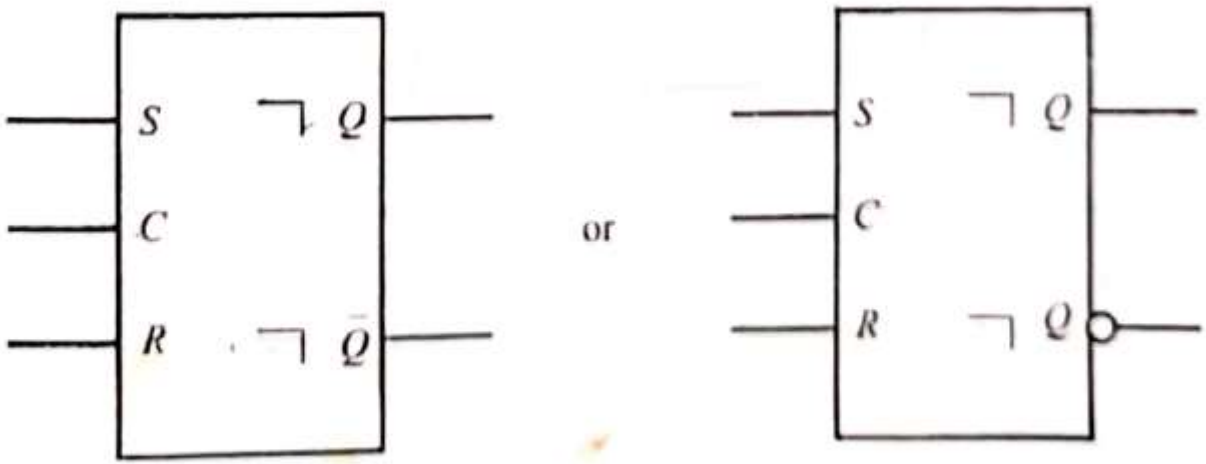

Logic symbols of master-slave *SR* flip-flop

Timing Diagram for MS SR Flip-Flop

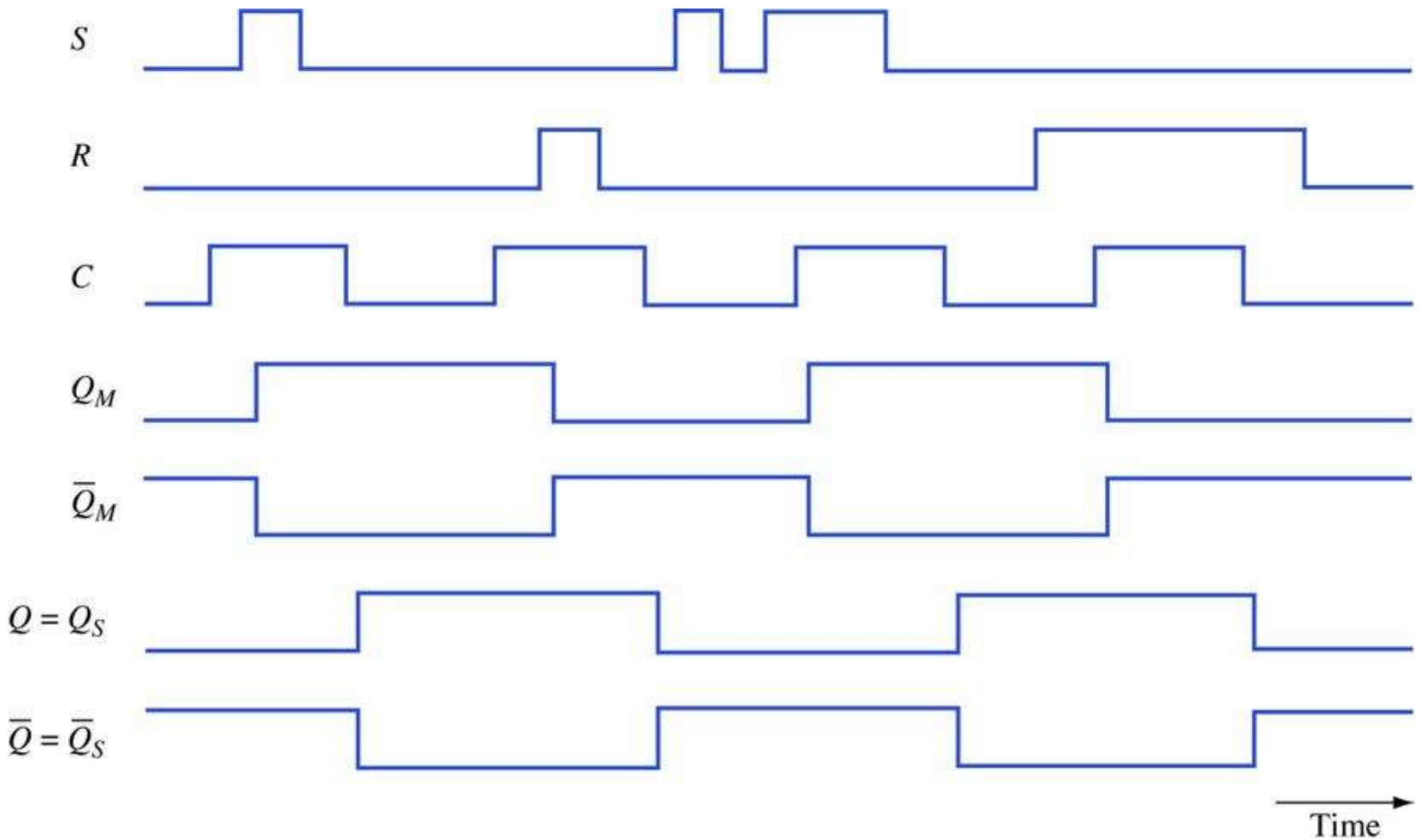

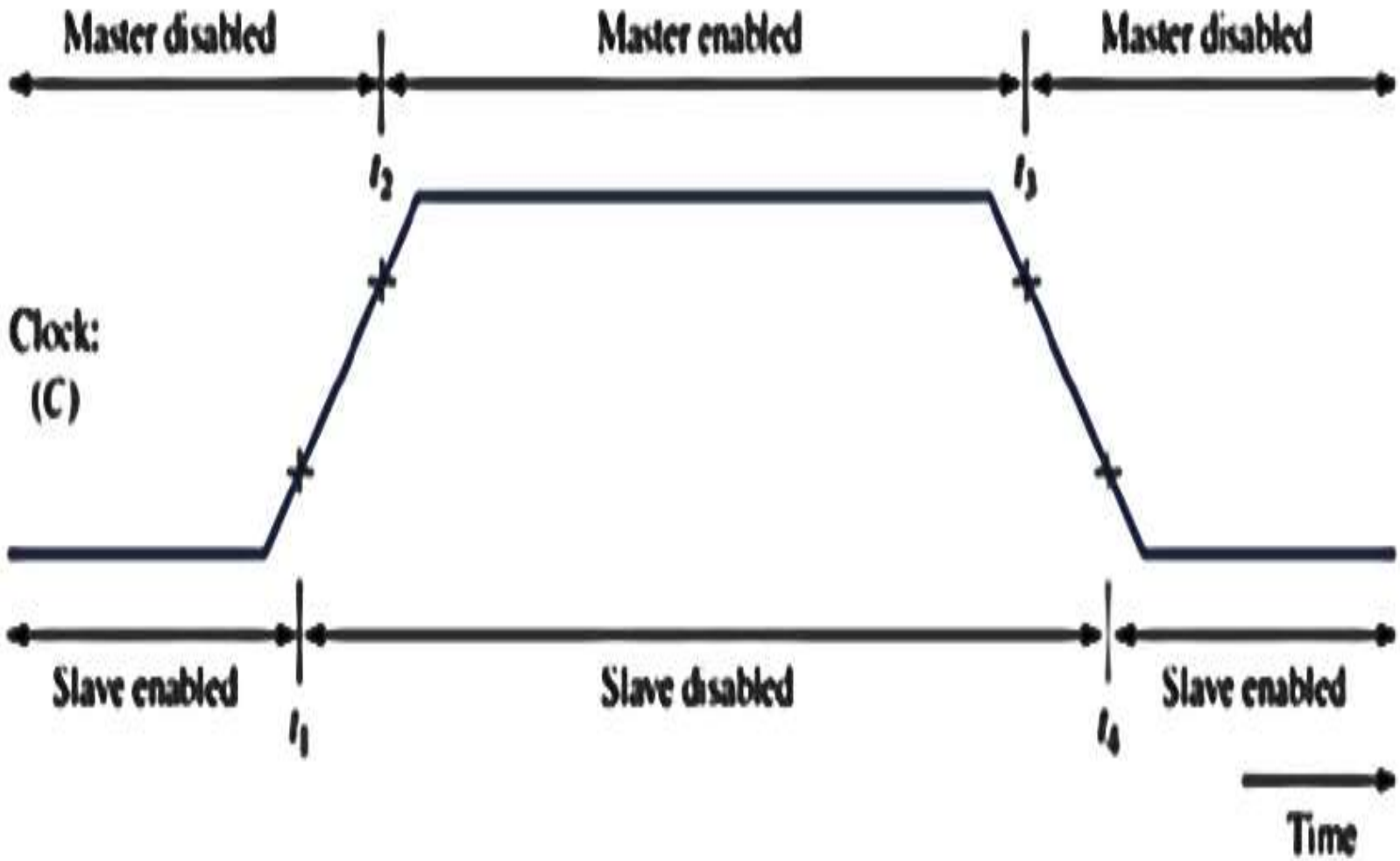
Master disabled
Master enabled
Master disabled
t_2
t_3
Clock:
(C)
Slave enabled
Slave disabled
Slave enabled
t_1
t_4
Time

Master-Slave JK Flip-Flop

- In this J corresponds to S and K corresponds to R inputs.
- J=K=1 causes the flip-flop to toggle from the current state.
  - If present state is 1 then next state is 0
  - If present state is 0 then next state is 1
- In this 2 AND gates are used to sense and steer the state of the slave [in addition to SR MS flip-flop]

Master-Slave JK Flip-Flop

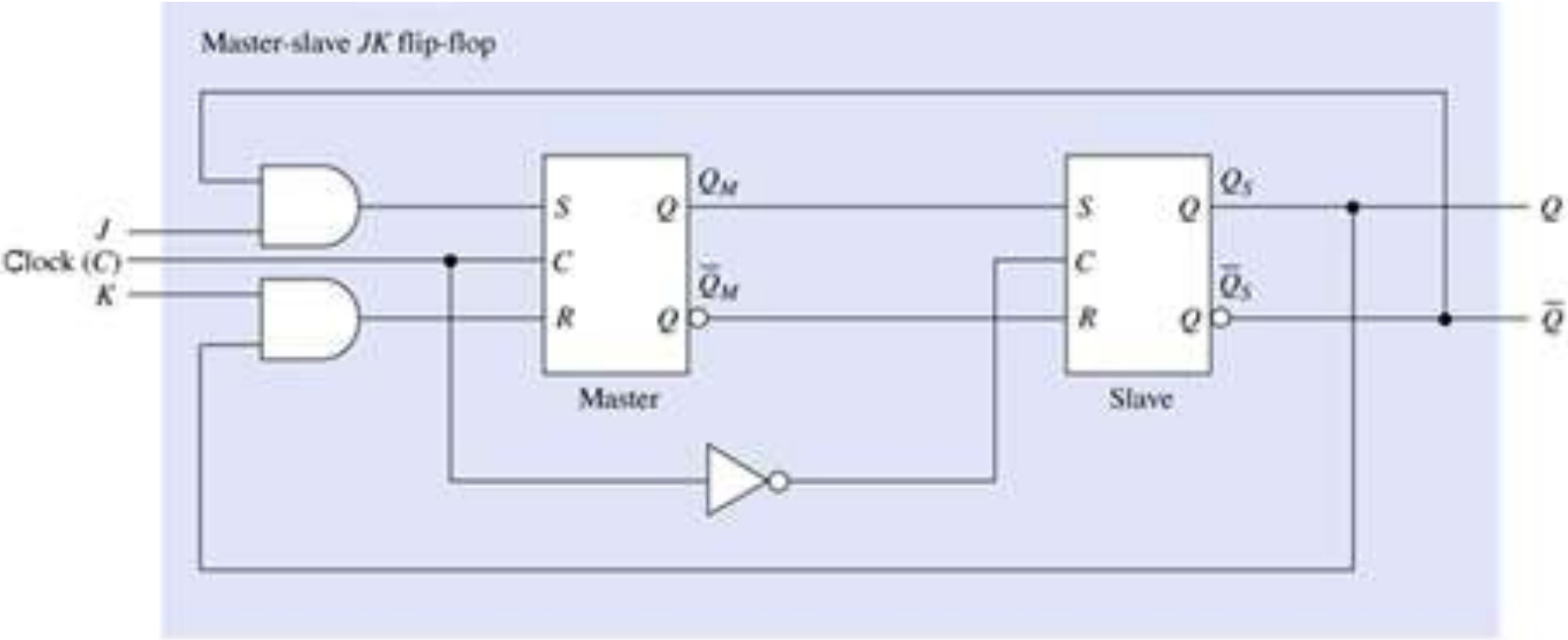

(a)

Master Slave Flip Flop using NAND gates

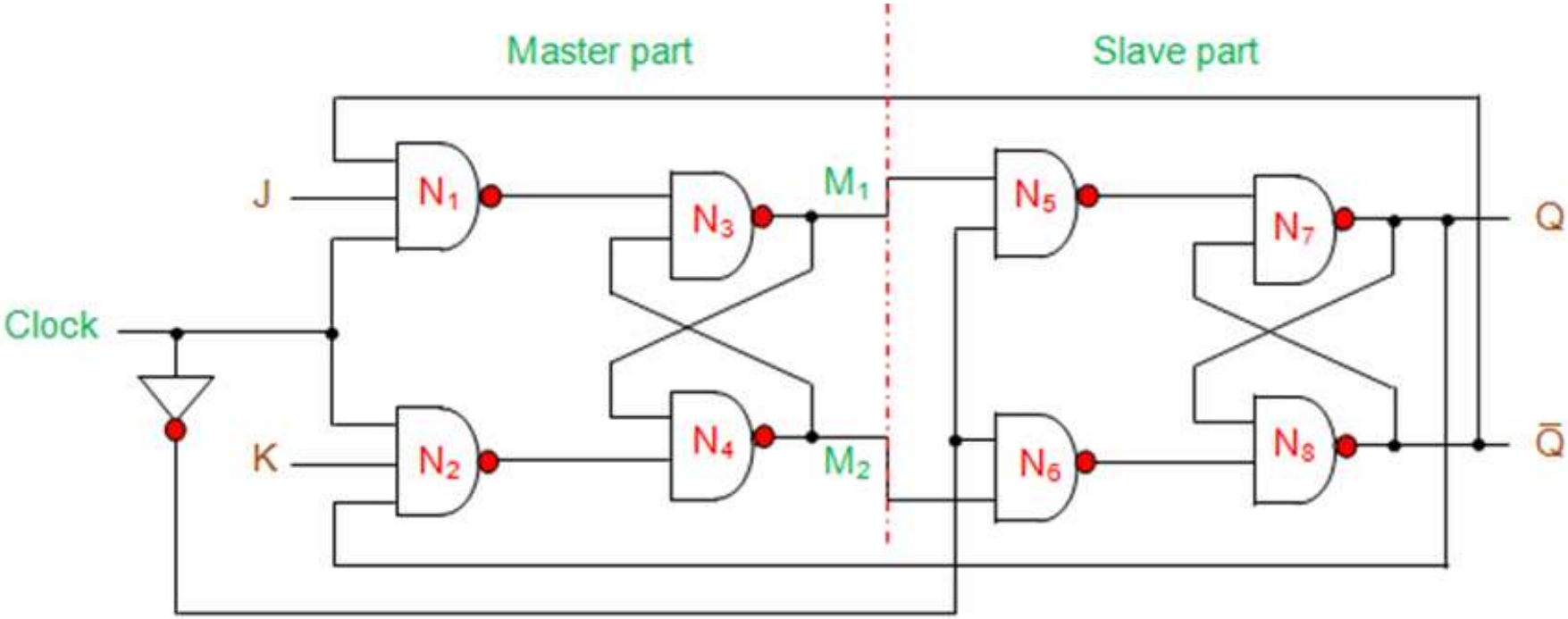

Truth Table for Master-Slave J-K Flip Flop

J	K	CLK	Q	Q'	
0	0	⎍	Q_0	Q_0'	Hold
0	1	⎍	0	1	Reset
1	0	⎍	1	0	Set
1	1	⎍	Q_0'	Q_0	Toggle (opposite state)

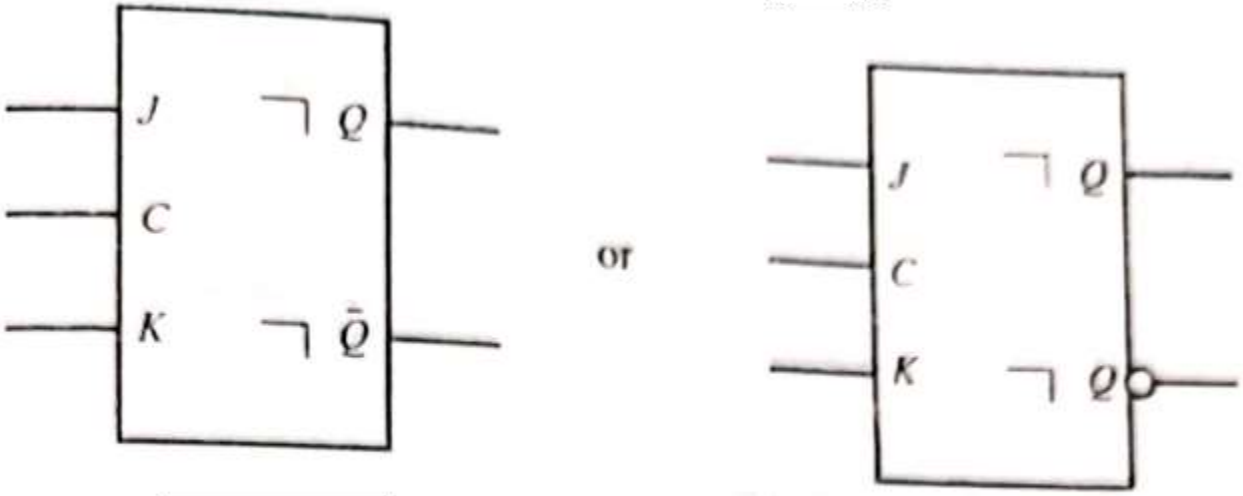

Symbols of master-slave *JK* flip-flop

Timing Diagram for JK MS Flip-Flop

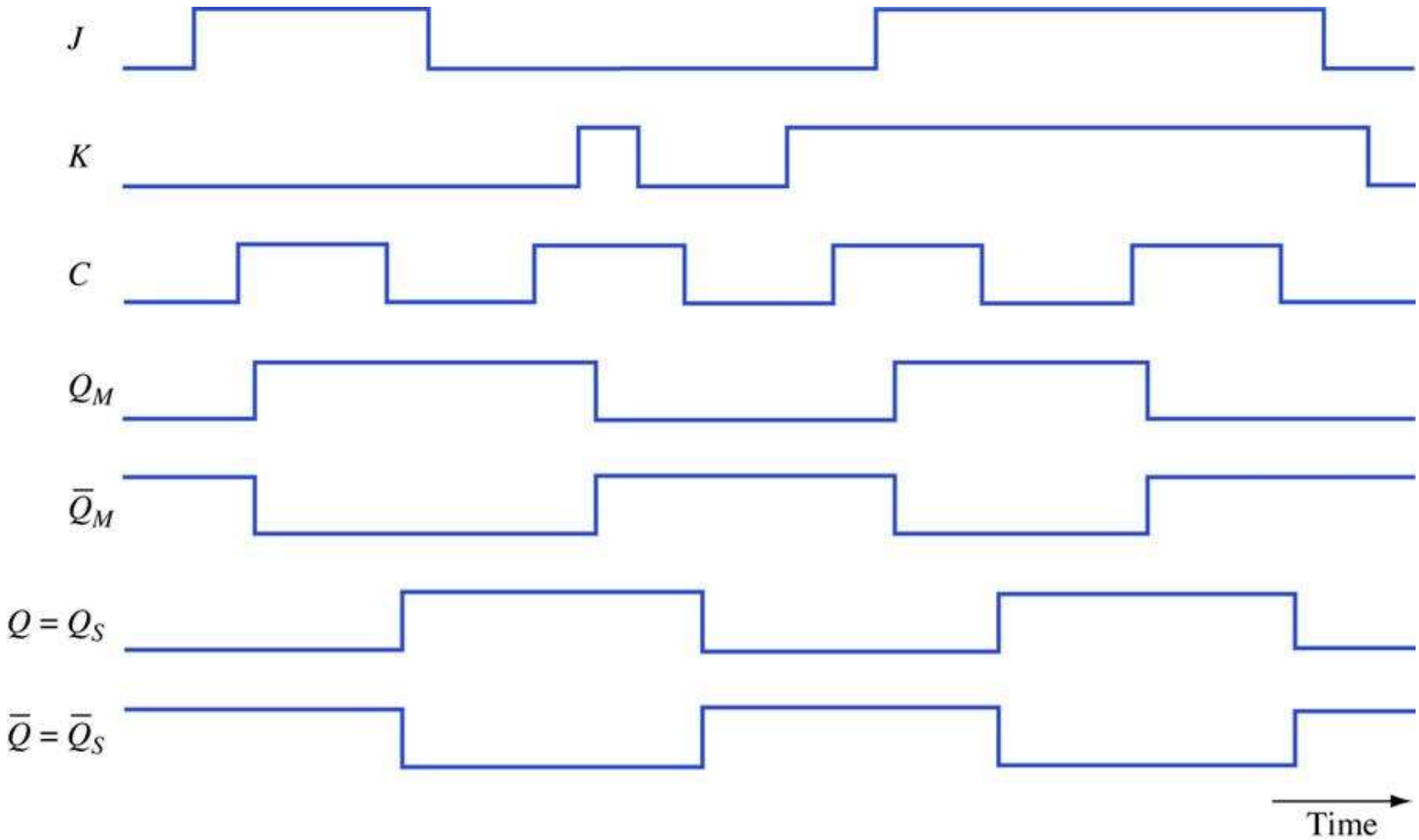

Triggering

- Triggering means making the circuit active [allow it to receive inputs]
- Triggering makes a circuit synchronous
- Triggering is given in the form of clock or gate signal
- Depending on the type of triggering used circuit becomes active at specific states of clock pulse
  - Level Triggering: Circuit becomes active when gating or clock pulse is at a particular level
  - Edge Triggering: Circuit becomes active at the negative edge or positive edge of the clock signal

Edge Triggered Flip-Flops

- Uses just one of the edges of the control to affect the reading of information on input lines.
- Designed to use either the positive or negative edge of the clock.
- Once triggering edge occurs the flip-flop remains unresponsive to information input changes until the next triggering edge.

Positive Edge Triggered D Flip-Flop

- Setting or Resetting of the flip-flop is established by the rising, or positive, edge of the control signal.

Inputs		Outputs	
D	C	Q^+	$\overline{Q}^+$
0	↑	0	1
1	↑	1	0
X	0	Q	$\overline{Q}$
X	1	Q	$\overline{Q}$

(*b*)

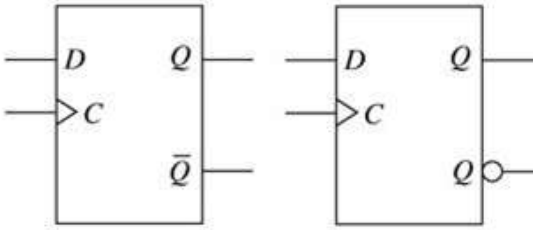

(*c*)

Negative Edge Triggered D Flip-Flop

- Falling edge is used to sample the D input .
- Achieved by using an inverter at the control input of the flip-flop.

Inputs		Outputs	
D	Clk	Q^+	$\overline{Q}^+$
0	↓	0	1
1	↓	1	0
X	0	Q	$\overline{Q}$
X	1	Q	$\overline{Q}$

(a)

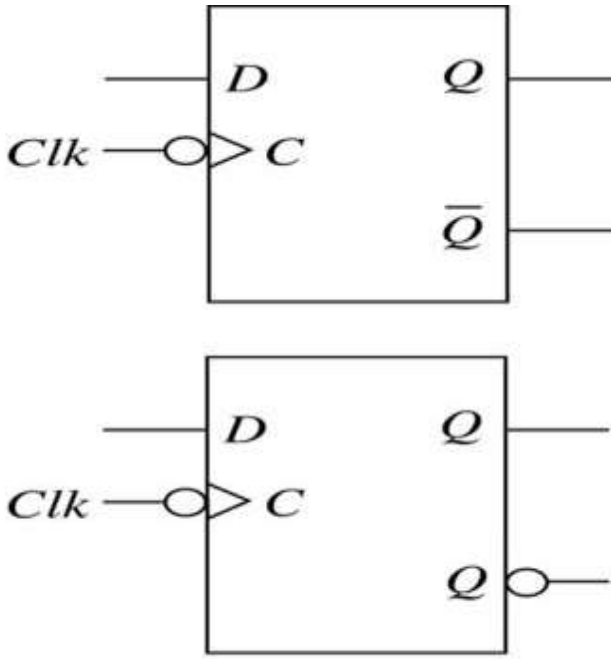

(b)

Characteristic Equations

- Algebraic description of the next state table of a flip-flop.
- Obtained by constructing the K-Map for Q+ in terms of present state and information input variables.

Characteristic Equation of SR flip-flop

Function Table

S	R	Q^+
0	0	Q
0	1	0
1	0	1
1	1	-

Next State Table

S	R	Q	Q^+
0	0	0	0
0	0	1	1
0	1	0	0
0	1	1	0
1	0	0	1
1	0	1	1
1	1	0	-
1	1	1	-

S \ RQ	00	01	11	10
0	0	1	0	0
1	1	1	-	-

K-map

Characteristic Equation $Q^+ = S + \bar{R}Q$

Characteristic Equation of JK flip-flop

Function Table

J	K	Q^+
0	0	Q
0	1	0
1	0	1
1	1	

Next State Table

J	K	Q	Q^+
0	0	0	0
0	0	1	1
0	1	0	0
0	1	1	0
1	0	0	1
1	0	1	1
1	1	0	1
1	1	1	0

J \ KQ	00	01	11	10
0	0	1	0	0
1	1	1	0	1

K-map

Characteristic Equation $Q^+ = J\bar{Q} + \bar{K}Q$

Characteristic Equation of D flip-flop

Function Table

D	Q^+
0	0
1	1

Next State Table

D	Q	Q^+
0	0	0
0	1	0
1	0	1
1	1	1

D \ Q	0	1
0	0	0
1	1	1

K-map

Characteristic Equation $Q^+ = D$

Characteristic Equation of T flip-flop

Function Table

T	Q^+
0	Q
1	

Next State Table

T	Q	Q^+
0	0	0
0	1	1
1	0	1
1	1	0

T \ Q	0	1
0	0	1
1	1	0

K-map

Characteristic Equation $Q^+ = T\bar{Q} + \bar{T}Q$

Flip-flop Conversions

- Identify the available and the required flip flop
- Write the Next state table for the required flip-flop
- Write excitation table for the available flip-flop
- Write the expression for the available flip flop in terms of required flip flop
- Draw the logic circuit

JK Flip-flop to D Flip-flop

Required -D : write next table

Next State Table

D	Q	Q^+
0	0	0
0	1	0
1	0	1
1	1	1

Available –JK: write excitation table

Next State Table

J	K	Q	Q^+
0	0	0	0
0	0	1	1
0	1	0	0
0	1	1	0
1	0	0	1
1	0	1	1
1	1	0	1
1	1	1	0

Excitation Table

Q	Q^+	J	K
0	0	0	X
0	1	1	X
1	0	X	1
1	1	X	0

JK Flip-flop to D Flip-flop

Conversion Table

D	Q	Q^+	J	K
0	0	0	0	X
0	1	0	X	1
1	0	1	1	X
1	1	1	X	0

K –map for J

D \ Q	0	1
0	0	X
1	1	X

$J = D$

K –map for K

D \ Q	0	1
0	X	1
1	X	0

$K = \overline{D}$

JK Flip-flop to D Flip-flop

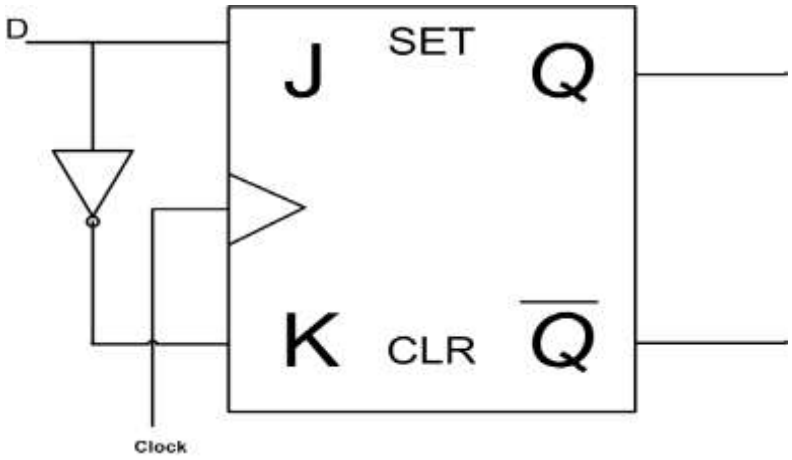

JK Flip-flop to T Flip-flop

Required -T : write next table

T	Q	Q^+
0	0	0
0	1	1
1	0	1
1	1	0

Available –JK: write excitation table

Next State Table

J	K	Q	Q^+
0	0	0	0
0	0	1	1
0	1	0	0
0	1	1	0
1	0	0	1
1	0	1	1
1	1	0	1
1	1	1	0

Excitation Table

Q	Q^+	J	K
0	0	0	X
0	1	1	X
1	0	X	1
1	1	X	0

JK Flip-flop to T Flip-flop

Conversion Table

T	Q	Q^+	J	K
0	0	0	0	X
0	1	1	X	0
1	0	1	1	X
1	1	0	X	1

K –map for J

T \ Q	0	1
0	0	X
1	1	X

$J = T$

K –map for K

T \ Q	0	1
0	X	0
1	X	1

$K = T$
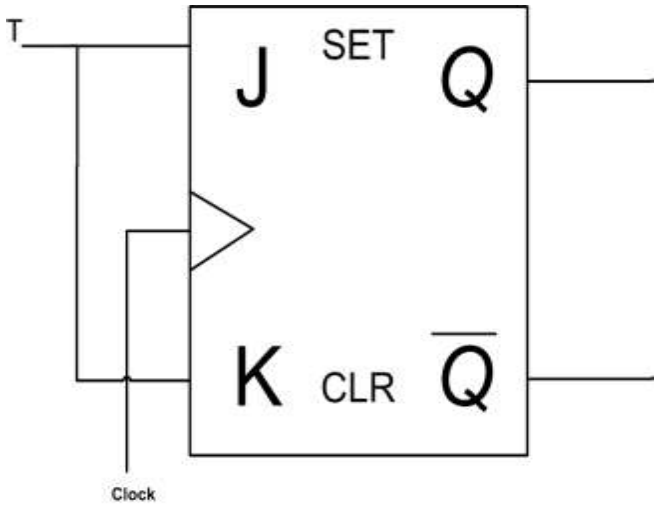
JK Flip-flop to T Flip-flop