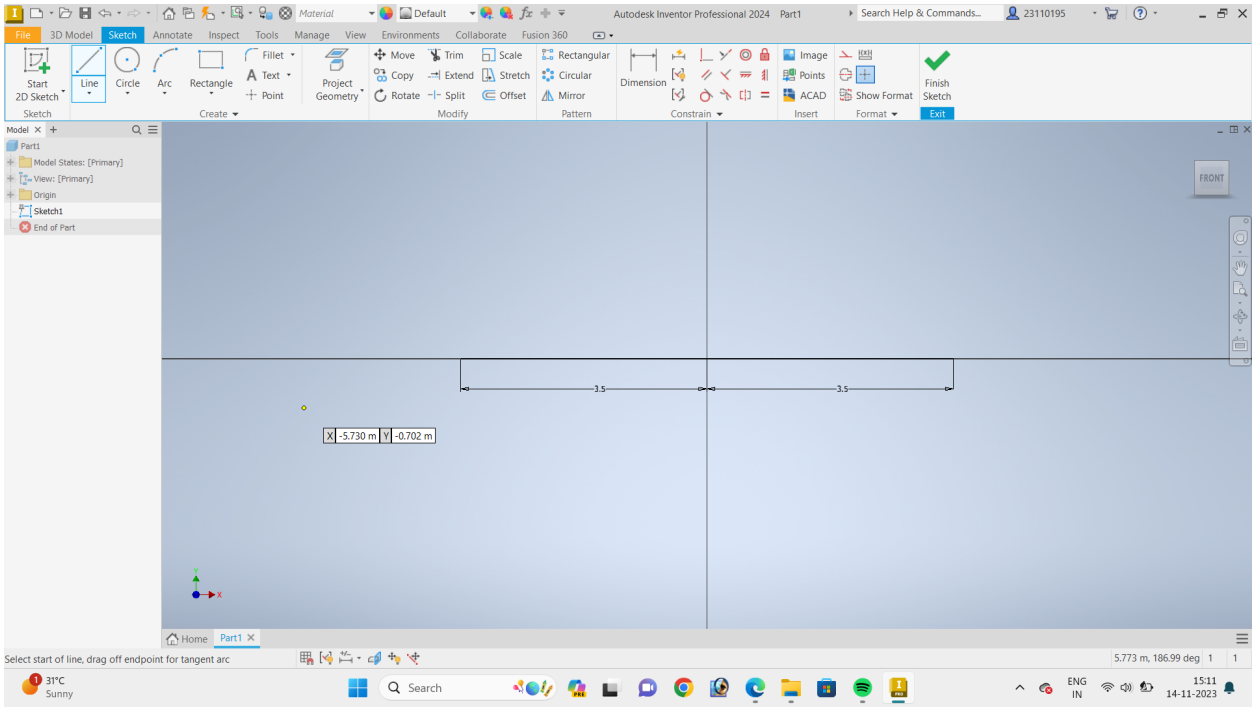
Autodesk Inventor Professional 2024
Part1
File
3D Model
Sketch
Annotate
Inspect
Tools
Manage
View
Environments
Collaborate
Fusion 360
Start 2D Sketch
Line
Circle
Arc
Rectangle
Fillet
Text
Point
Project Geometry
Move
Trim
Scale
Copy
Extend
Stretch
Rotate
Split
Offset
Rectangular
Circular
Mirror
Dimension
Image
Points
ACAD
Show Format
Finish Sketch
Exit
Sketch
Create
Modify
Pattern
Constrain
Insert
Format
Model
Part1
Model States: [Primary]
View: [Primary]
Origin
Sketch1
End of Part
FRONT
3.5
3.5
X -5.730 m
Y -0.702 m
Home
Part1
Select start of line, drag off endpoint for tangent arc
5.773 m, 186.99 deg
31°C
Sunny
Search
ENG
IN
15:11
14-11-2023

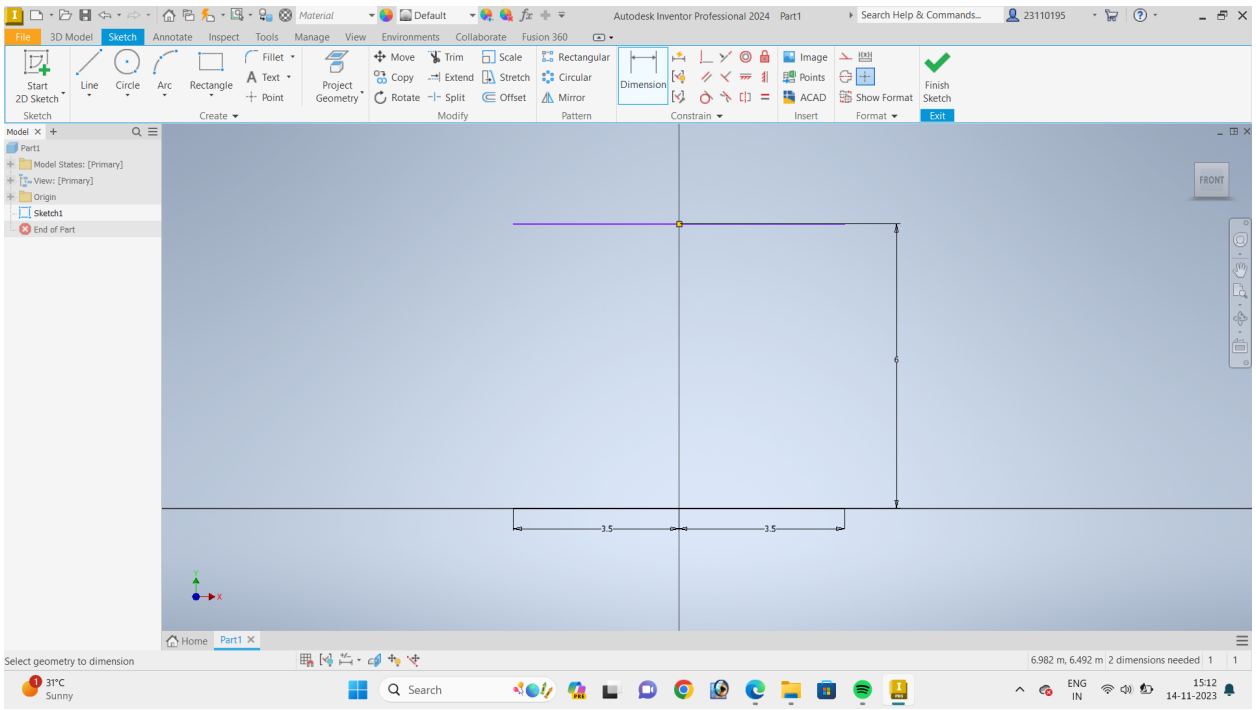
Autodesk Inventor Professional 2024
Part1
File
3D Model
Sketch
Annotate
Inspect
Tools
Manage
View
Environments
Collaborate
Fusion 360
Start 2D Sketch
Line
Circle
Arc
Rectangle
Fillet
Text
Point
Project Geometry
Move
Trim
Scale
Copy
Extend
Stretch
Rotate
Split
Offset
Rectangular
Circular
Mirror
Dimension
Image
Points
ACAD
Show Format
Finish Sketch
Exit
Sketch
Create
Modify
Pattern
Constrain
Insert
Format
Model
Part1
Model States: [Primary]
View: [Primary]
Origin
Sketch1
End of Part
FRONT
6
3.5
3.5
Home
Part1
Select geometry to dimension
6.982 m, 6.492 m
2 dimensions needed
31°C
Sunny
Search
ENG
IN
15:12
14-11-2023

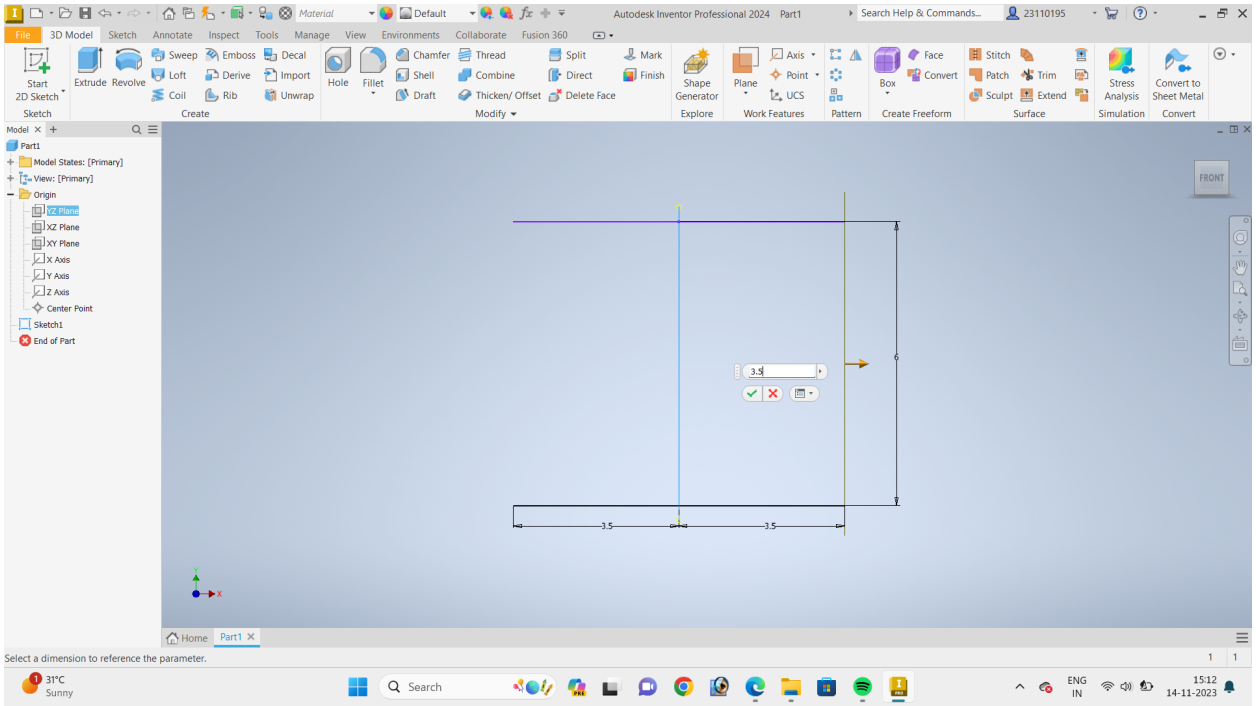
Autodesk Inventor Professional 2024 Part1
File 3D Model Sketch Annotate Inspect Tools Manage View Environments Collaborate Fusion 360
Start 2D Sketch
Extrude Revolve
Sweep Loft Coil Emboss Derive Rib Decal Import Unwrap
Hole Fillet
Chamfer Shell Draft Thread Combine Thicken/ Offset Split Direct Delete Face Mark Finish
Shape Generator
Plane Axis Point UCS
Box Face Convert
Stitch Patch Sculpt Trim Extend
Stress Analysis
Convert to Sheet Metal
Sketch Create Modify Explore Work Features Pattern Create Freeform Surface Simulation Convert
Model
Part1
Model States: [Primary]
View: [Primary]
Origin
YZ Plane
XZ Plane
XY Plane
X Axis
Y Axis
Z Axis
Center Point
Sketch1
End of Part
FRONT
3.5
6
3.5
3.5
Home Part1
Select a dimension to reference the parameter.
31°C Sunny
Search
ENG IN
15:12 14-11-2023

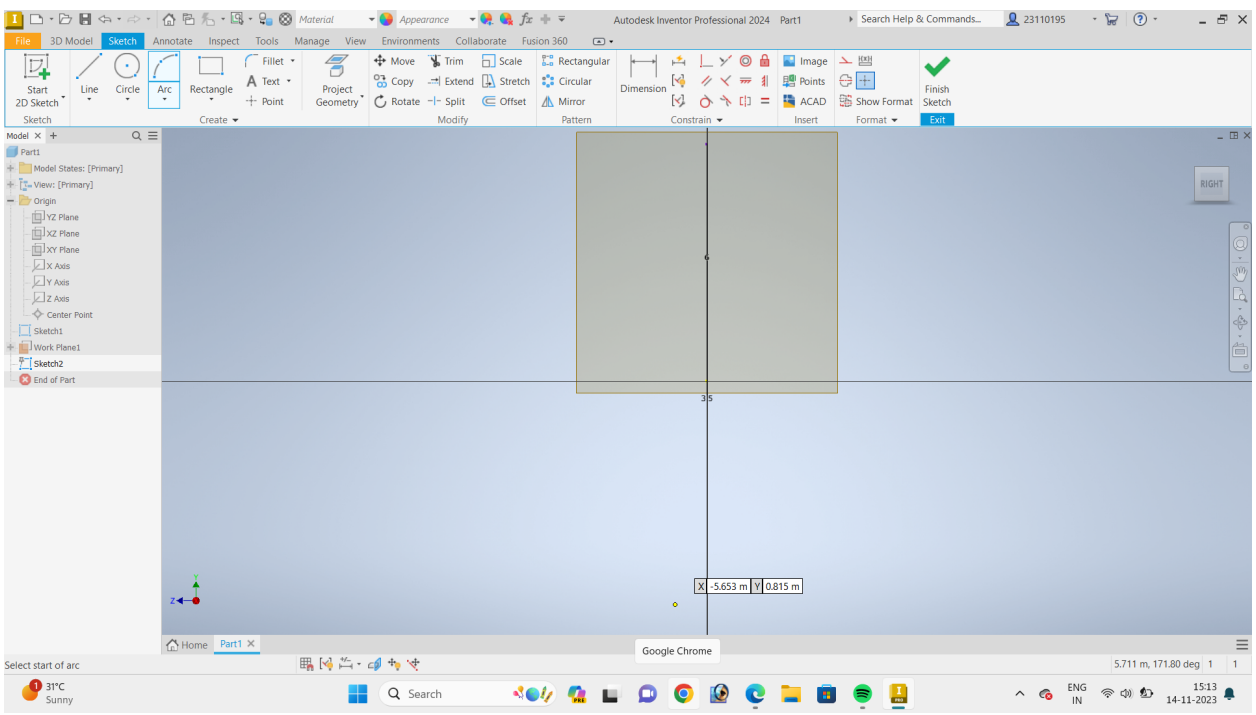
Autodesk Inventor Professional 2024 Part1
File 3D Model Sketch Annotate Inspect Tools Manage View Environments Collaborate Fusion 360
Start 2D Sketch
Line Circle Arc Rectangle
Fillet Text Point
Project Geometry
Move Copy Rotate Trim Extend Split Scale Stretch Offset
Rectangular Circular Mirror
Dimension
Image Points ACAD Show Format
Finish Sketch
Sketch Create Modify Pattern Constrain Insert Format Exit
Model
Part1
Model States: [Primary]
View: [Primary]
Origin
YZ Plane
XZ Plane
XY Plane
X Axis
Y Axis
Z Axis
Center Point
Sketch1
Work Plane1
Sketch2
End of Part
RIGHT
6
3.5
X -5.653 m Y 0.815 m
Home Part1
Google Chrome
Select start of arc
5.711 m, 171.80 deg
31°C Sunny
Search
ENG IN
15:13 14-11-2023

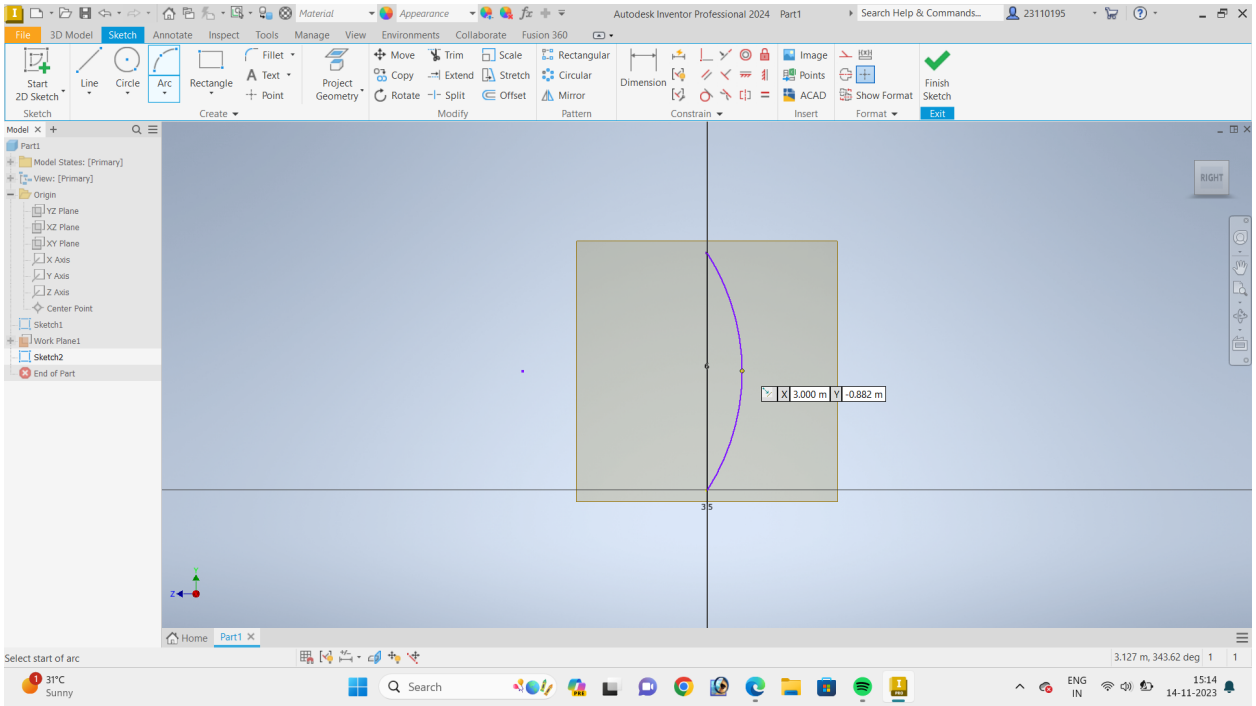
Autodesk Inventor Professional 2024 Part1
Search Help & Commands...
23110195
File 3D Model Sketch Annotate Inspect Tools Manage View Environments Collaborate Fusion 360
Start 2D Sketch
Line
Circle
Arc
Rectangle
Fillet
Text
Point
Project Geometry
Move
Copy
Rotate
Trim
Extend
Split
Scale
Stretch
Offset
Rectangular
Circular
Mirror
Dimension
Image
Points
ACAD
Show Format
Finish Sketch
Sketch
Create
Modify
Pattern
Constrain
Insert
Format
Exit
Model
Part1
Model States: [Primary]
View: [Primary]
Origin
YZ Plane
XZ Plane
XY Plane
X Axis
Y Axis
Z Axis
Center Point
Sketch1
Work Plane1
Sketch2
End of Part
RIGHT
X 3.000 m Y -0.882 m
3.5
Home
Part1
Select start of arc
3.127 m, 343.62 deg
31°C
Sunny
Search
ENG
IN
15:14
14-11-2023

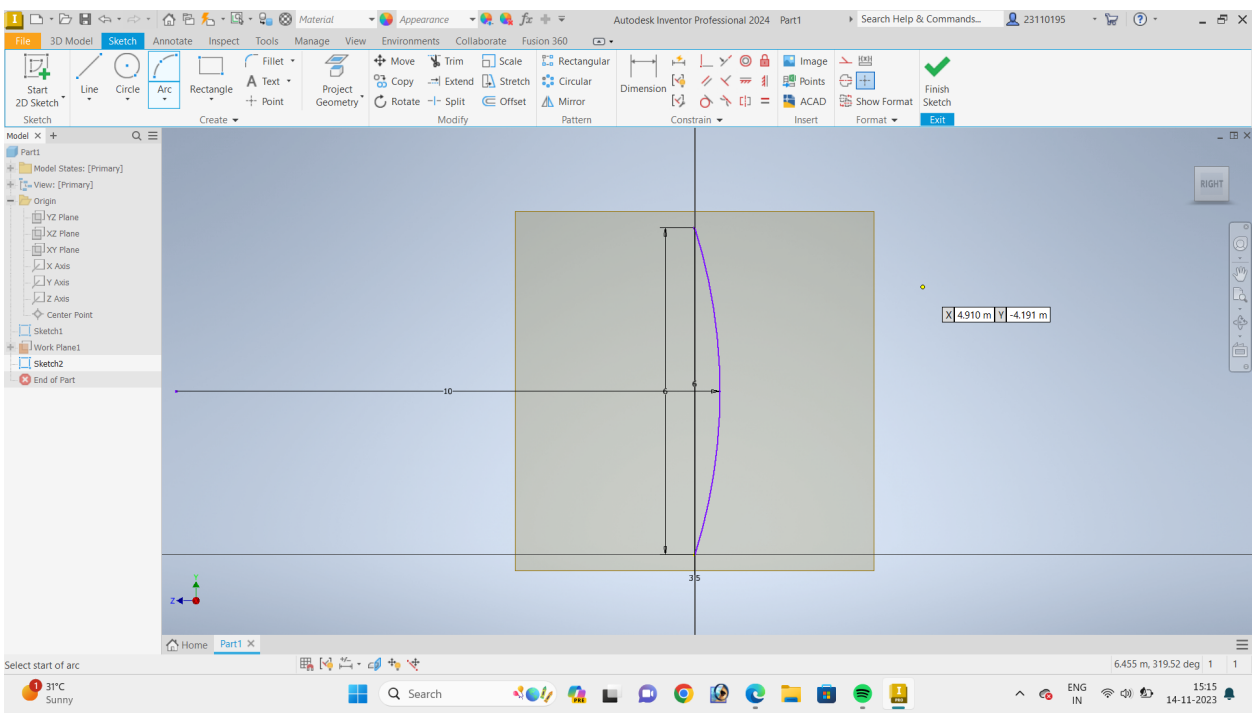
Autodesk Inventor Professional 2024 Part1
Search Help & Commands...
23110195
File 3D Model Sketch Annotate Inspect Tools Manage View Environments Collaborate Fusion 360
Start 2D Sketch
Line
Circle
Arc
Rectangle
Fillet
Text
Point
Project Geometry
Move
Copy
Rotate
Trim
Extend
Split
Scale
Stretch
Offset
Rectangular
Circular
Mirror
Dimension
Image
Points
ACAD
Show Format
Finish Sketch
Sketch
Create
Modify
Pattern
Constrain
Insert
Format
Exit
Model
Part1
Model States: [Primary]
View: [Primary]
Origin
YZ Plane
XZ Plane
XY Plane
X Axis
Y Axis
Z Axis
Center Point
Sketch1
Work Plane1
Sketch2
End of Part
RIGHT
X 4.910 m Y -4.191 m
10
3.5
Home
Part1
Select start of arc
6.455 m, 319.52 deg
31°C
Sunny
Search
ENG
IN
15:15
14-11-2023

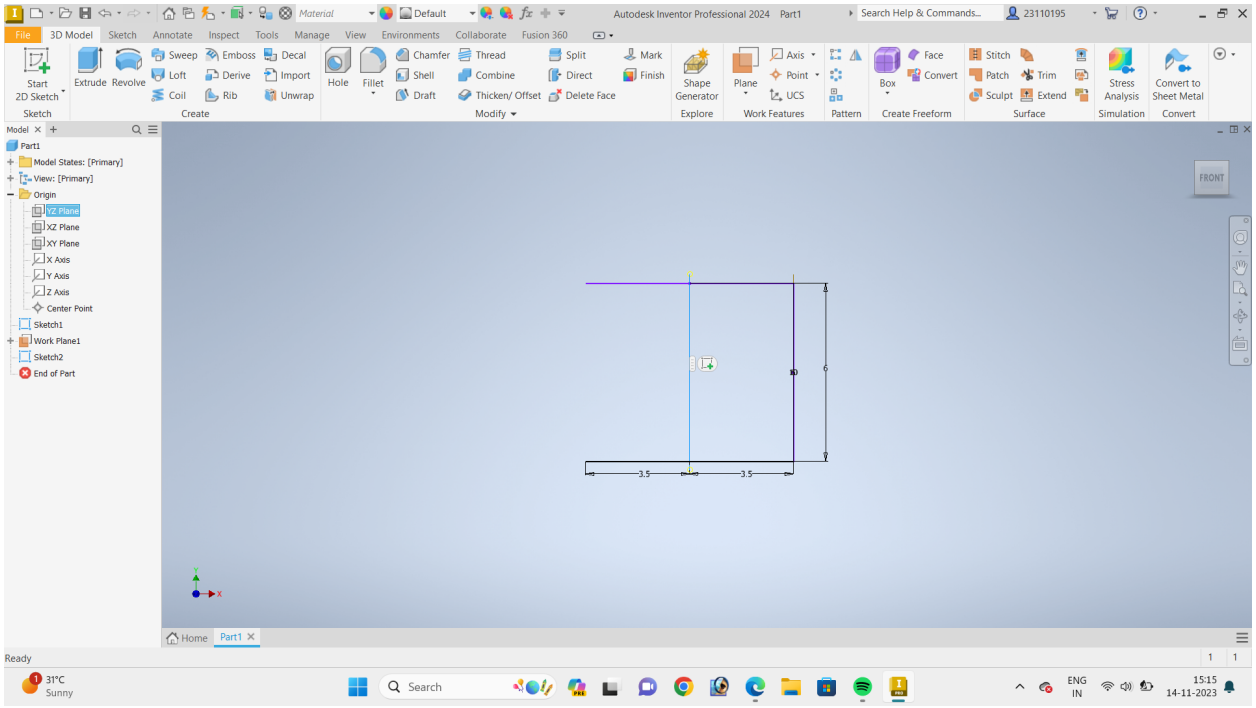
Autodesk Inventor Professional 2024 Part1
Search Help & Commands...
23110195
File
3D Model
Sketch
Annotate
Inspect
Tools
Manage
View
Environments
Collaborate
Fusion 360
Start 2D Sketch
Extrude
Revolve
Sweep
Loft
Coil
Emboss
Derive
Rib
Decal
Import
Unwrap
Hole
Fillet
Chamfer
Shell
Draft
Thread
Combine
Thicken/ Offset
Split
Direct
Delete Face
Mark
Finish
Shape Generator
Plane
Axis
Point
UCS
Box
Face
Convert
Stitch
Patch
Sculpt
Trim
Extend
Stress Analysis
Convert to Sheet Metal
Sketch
Create
Modify
Explore
Work Features
Pattern
Create Freeform
Surface
Simulation
Convert
Model
Part1
Model States: [Primary]
View: [Primary]
Origin
YZ Plane
XZ Plane
XY Plane
X Axis
Y Axis
Z Axis
Center Point
Sketch1
Work Plane1
Sketch2
End of Part
FRONT
6
3.5
3.5
Home
Part1
Ready
31°C
Sunny
Search
ENG
IN
15:15
14-11-2023

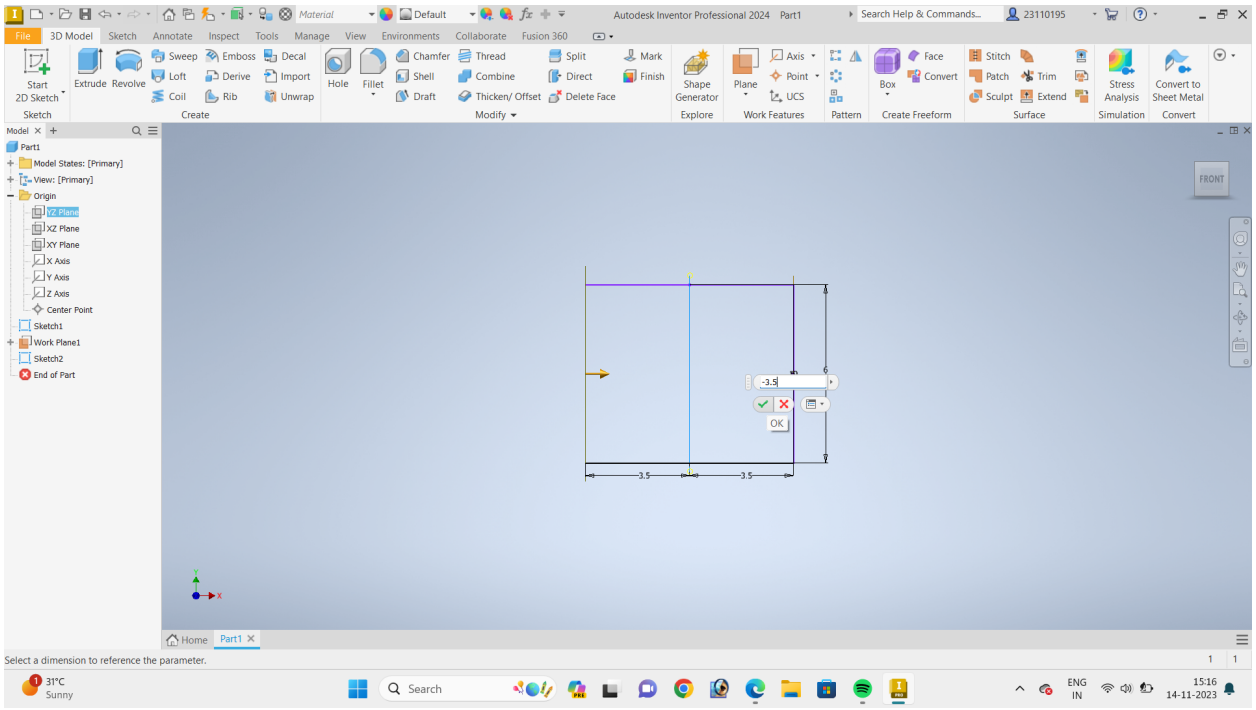
Autodesk Inventor Professional 2024 Part1
Search Help & Commands...
23110195
File
3D Model
Sketch
Annotate
Inspect
Tools
Manage
View
Environments
Collaborate
Fusion 360
Start 2D Sketch
Extrude
Revolve
Sweep
Loft
Coil
Emboss
Derive
Rib
Decal
Import
Unwrap
Hole
Fillet
Chamfer
Shell
Draft
Thread
Combine
Thicken/ Offset
Split
Direct
Delete Face
Mark
Finish
Shape Generator
Plane
Axis
Point
UCS
Box
Face
Convert
Stitch
Patch
Sculpt
Trim
Extend
Stress Analysis
Convert to Sheet Metal
Sketch
Create
Modify
Explore
Work Features
Pattern
Create Freeform
Surface
Simulation
Convert
Model
Part1
Model States: [Primary]
View: [Primary]
Origin
YZ Plane
XZ Plane
XY Plane
X Axis
Y Axis
Z Axis
Center Point
Sketch1
Work Plane1
Sketch2
End of Part
FRONT
-3.5
OK
6
3.5
3.5
Home
Part1
Select a dimension to reference the parameter.
31°C
Sunny
Search
ENG
IN
15:16
14-11-2023

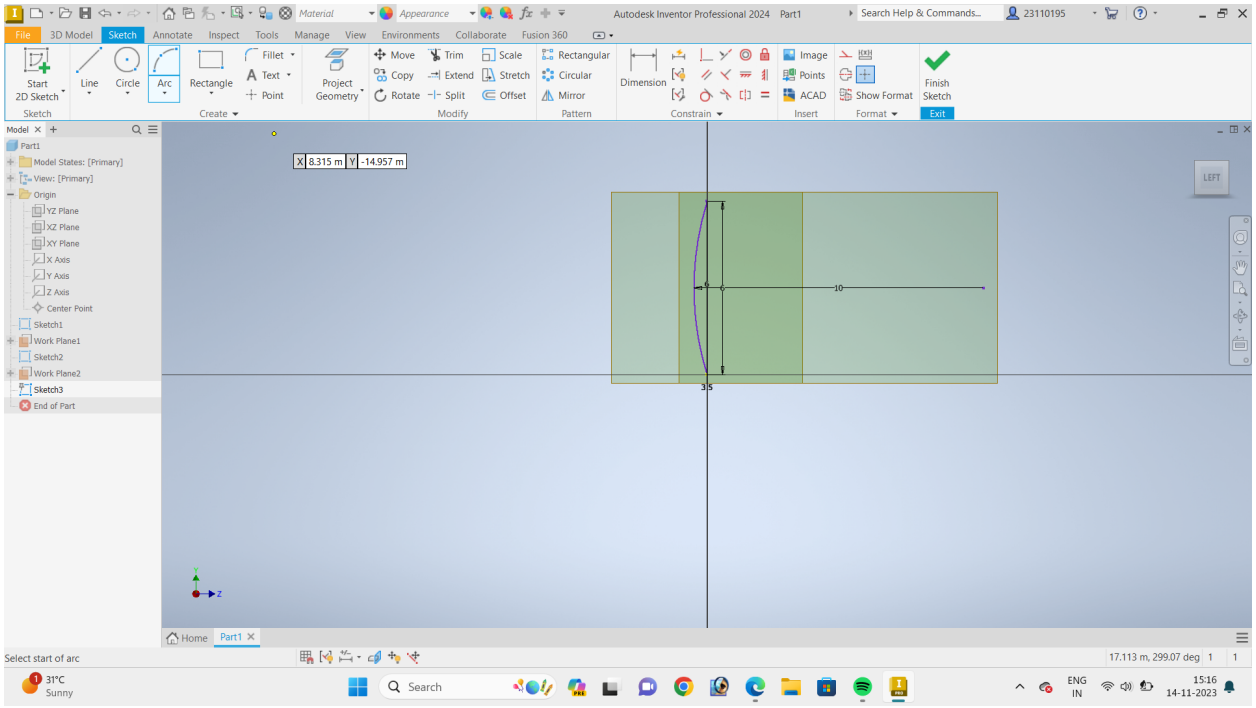
Autodesk Inventor Professional 2024 Part1
File 3D Model Sketch Annotate Inspect Tools Manage View Environments Collaborate Fusion 360
Start 2D Sketch Line Circle Arc Rectangle Fillet Text Point Project Geometry
Move Copy Rotate Trim Extend Split Scale Stretch Offset
Rectangular Circular Mirror
Dimension
Image Points ACAD Show Format
Finish Sketch Exit
Sketch Create Modify Pattern Constrain Insert Format
X 8.315 m Y -14.957 m
LEFT
10
3.5
Select start of arc
17.113 m, 299.07 deg

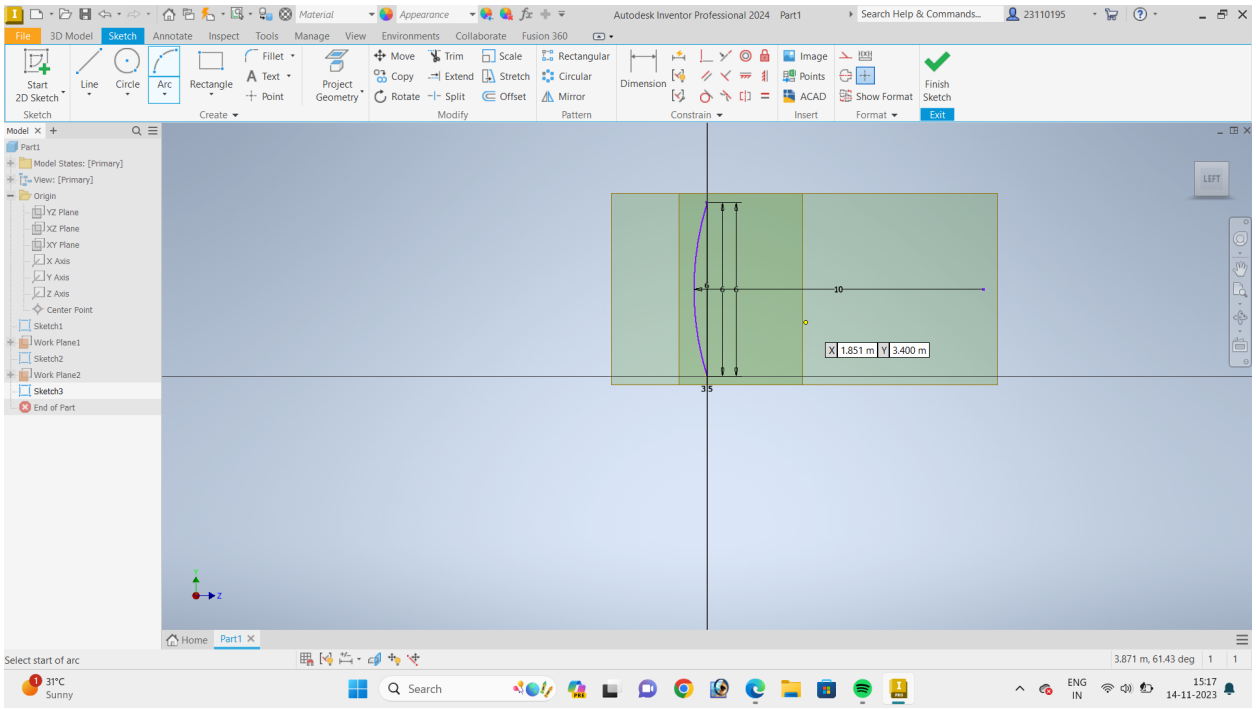
Autodesk Inventor Professional 2024 Part1
File 3D Model Sketch Annotate Inspect Tools Manage View Environments Collaborate Fusion 360
Start 2D Sketch Line Circle Arc Rectangle Fillet Text Point Project Geometry
Move Copy Rotate Trim Extend Split Scale Stretch Offset
Rectangular Circular Mirror
Dimension
Image Points ACAD Show Format
Finish Sketch Exit
Sketch Create Modify Pattern Constrain Insert Format
X 1.851 m Y 3.400 m
LEFT
10
3.5
Select start of arc
3.871 m, 61.43 deg

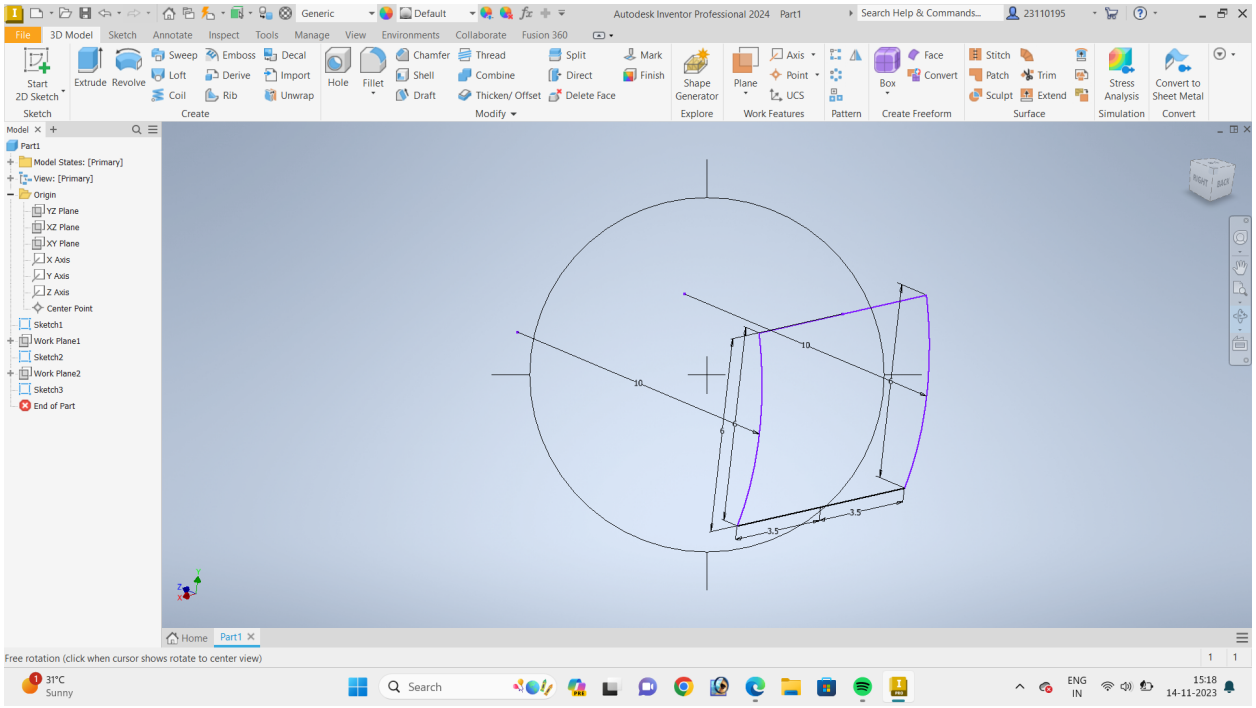
Autodesk Inventor Professional 2024 Part1
Free rotation (click when cursor shows rotate to center view)

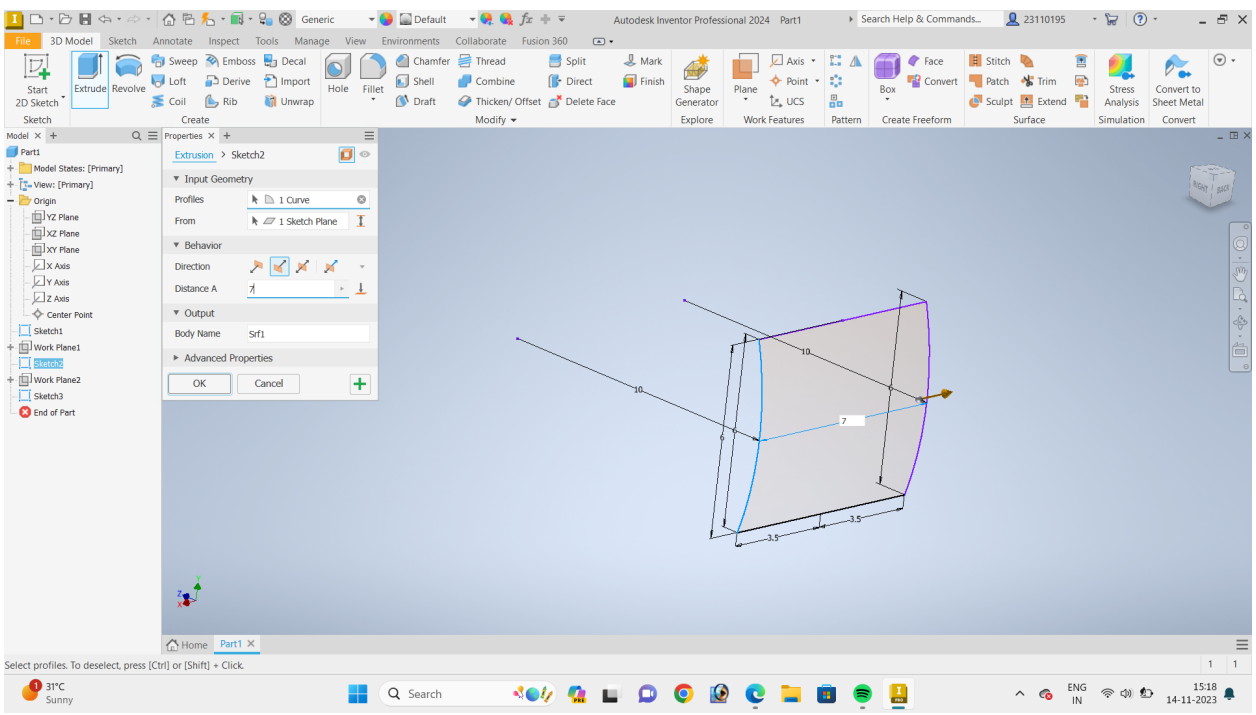
Autodesk Inventor Professional 2024 Part1
Extrusion > Sketch2
Input Geometry
Profiles 1 Curve
From 1 Sketch Plane
Behavior
Direction
Distance A 7
Output
Body Name Srf1
Advanced Properties
OK
Cancel
Select profiles. To deselect, press [Ctrl] or [Shift] + Click.

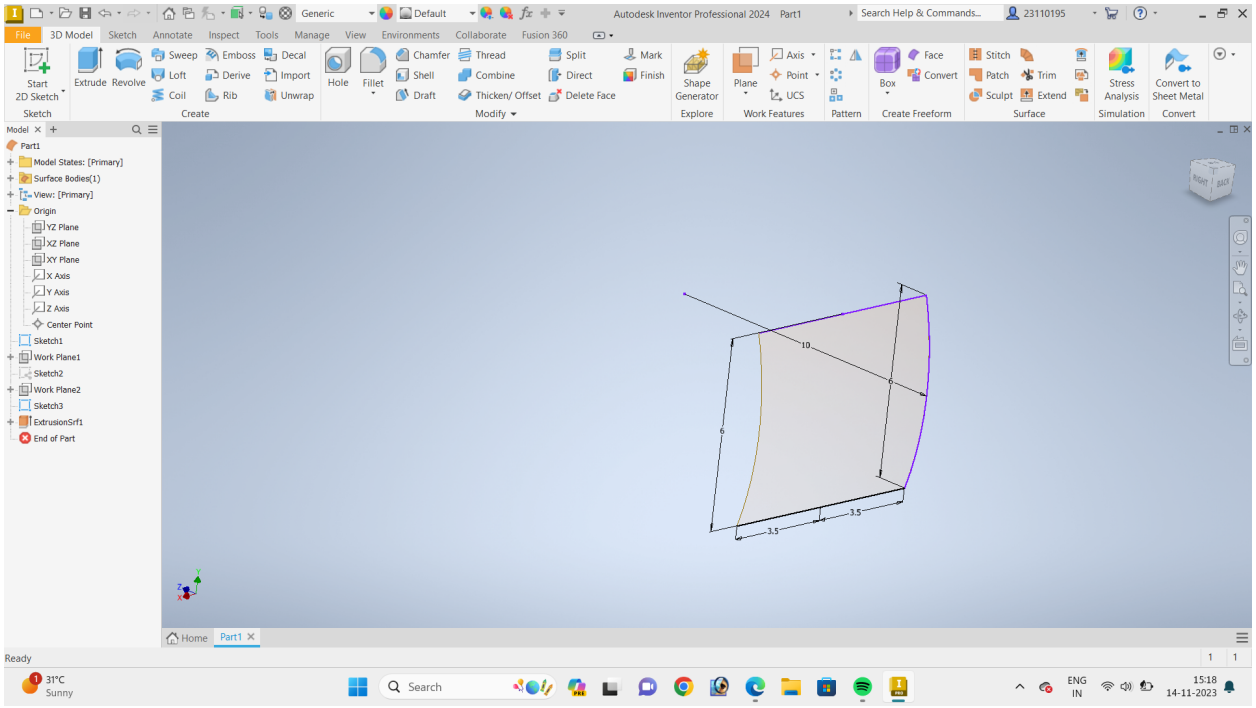
Autodesk Inventor Professional 2024 Part1
10
6
3.5
3.5

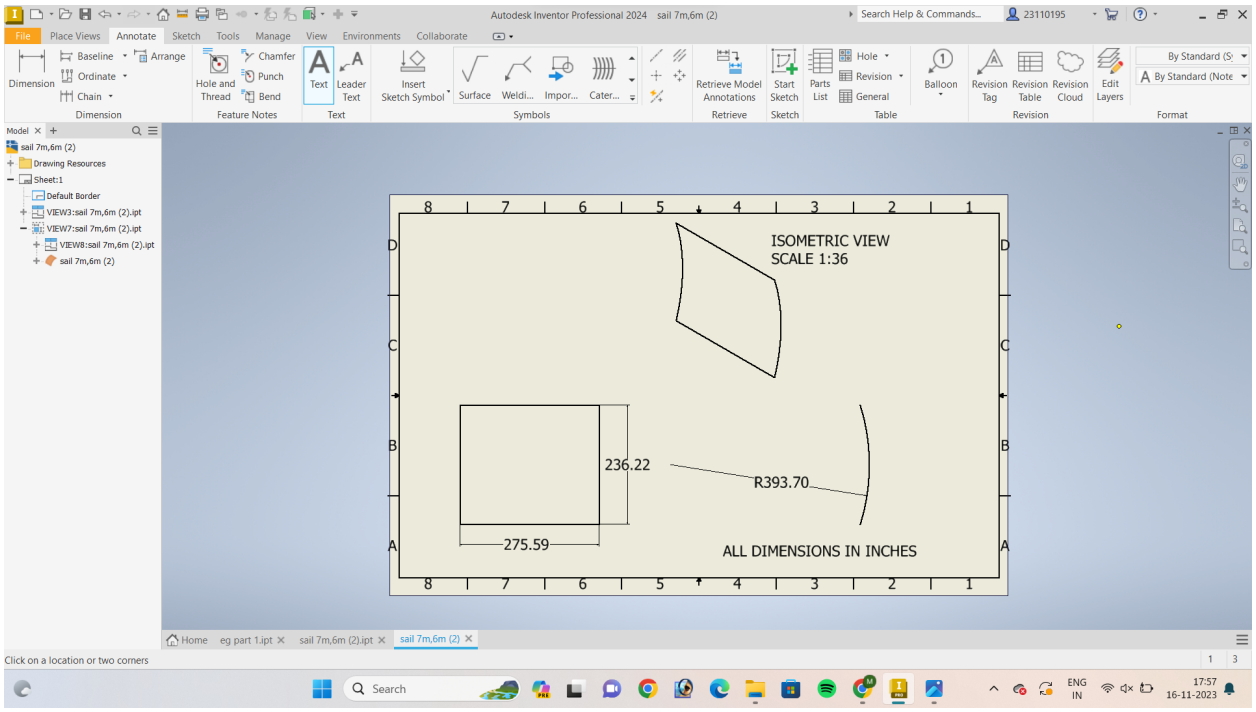
Autodesk Inventor Professional 2024 sail 7m,6m (2)
ISOMETRIC VIEW
SCALE 1:36
236.22
R393.70
275.59
ALL DIMENSIONS IN INCHES