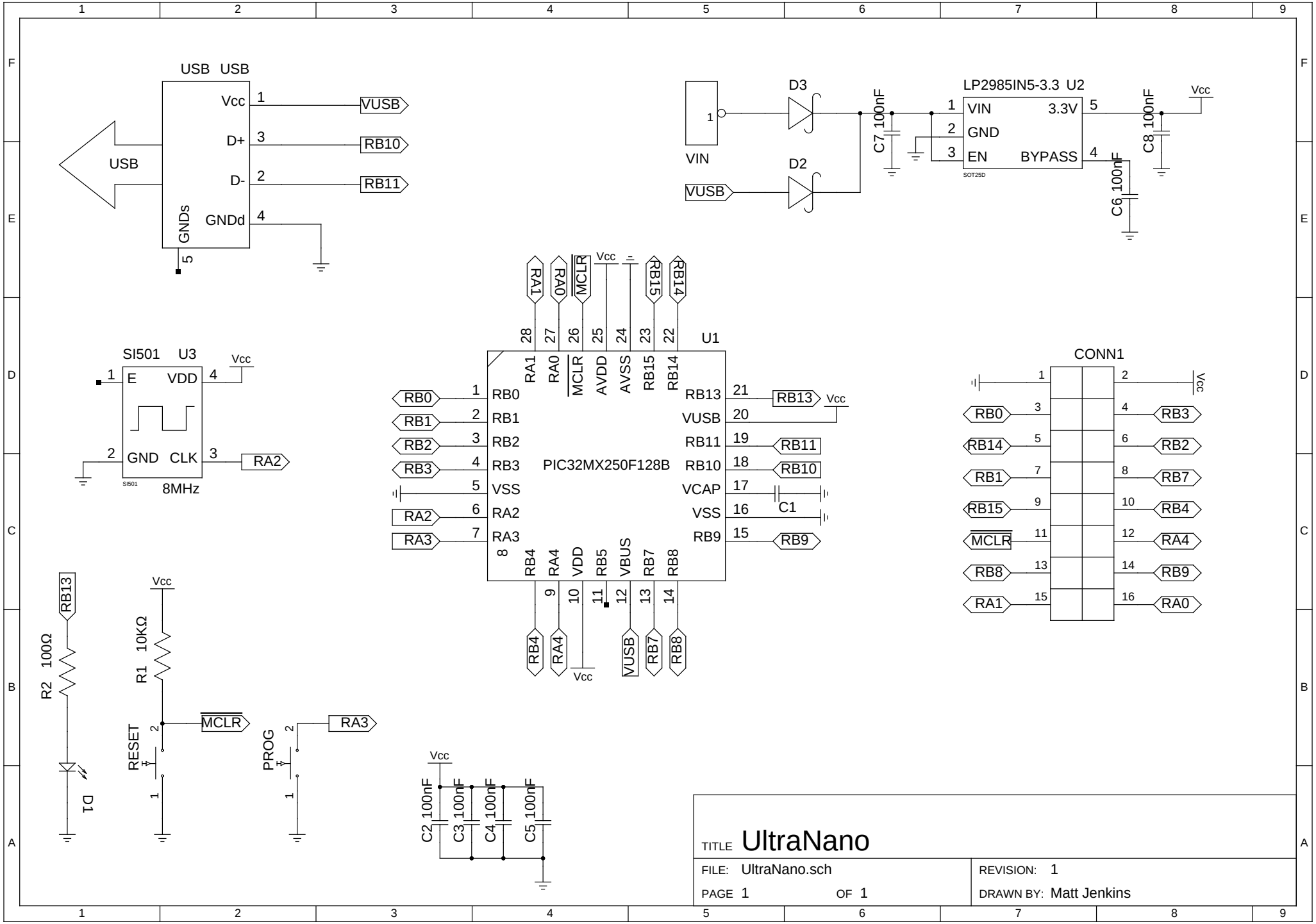

TITLE UltraNano

FILE: UltraNano.sch

REVISION: 1

PAGE 1 OF 1

DRAWN BY: Matt Jenkins