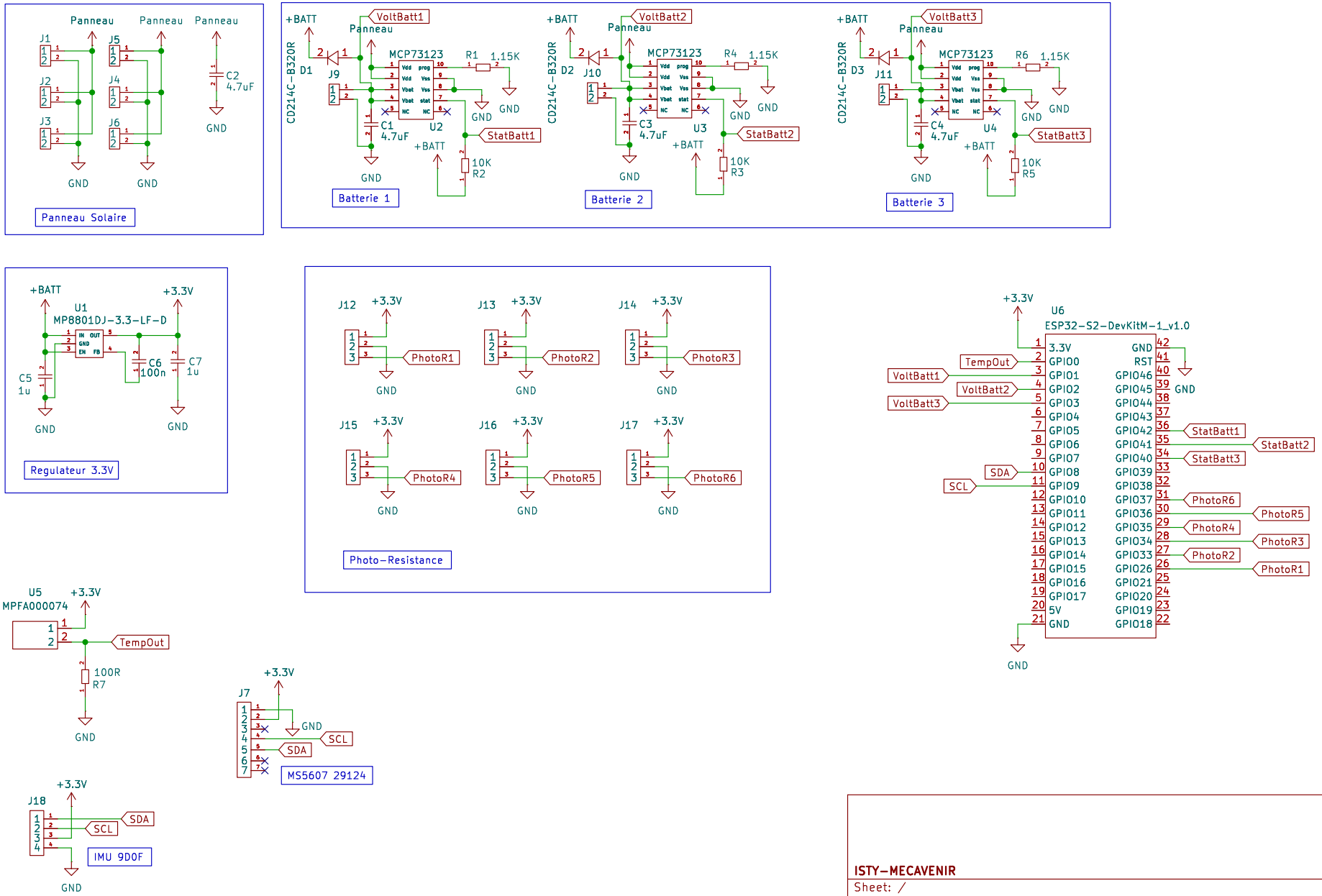

ISTY-MECAVENIR

Sheet: /

File: PCB-STELLA.kicad_sch

Title: PCB-Projet_STELLA

Size: A4	Date: 2024-06-04	**Rev: 1.0**
KiCad E.D.A. 8.0.1		Id: 1/1

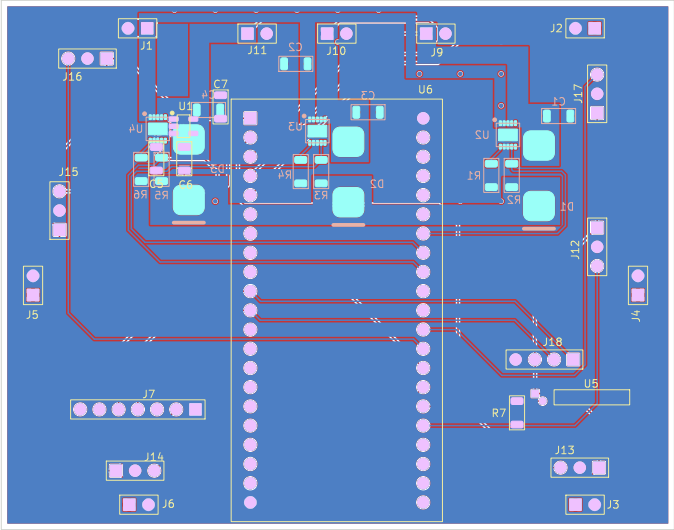
J1
J11
C2
J10
J9
J2
J16
C7
U1
U6
C3
C4
J17
U4
U3
U2
J15
R6
R5
C6
R4
R3
D3
D2
R1
R2
D1
J12
J5
J4
J18
U5
J7
R7
J14
J13
J6
J3