REV	ECO	BY	DATE

This engineering drawing (CAD / CAM or otherwise) is the proprietary property of Square D Company, not part of the public domain, and is issued with the express understanding and agreement that it is not to be reproduced or copied in whole or in part or used for furnishing information to others, or used directly or indirectly, in any way detrimental to the interest of Square D Company and is to be returned upon request by Square D Company. All Rights Reserved.

© 1989 Square D Company

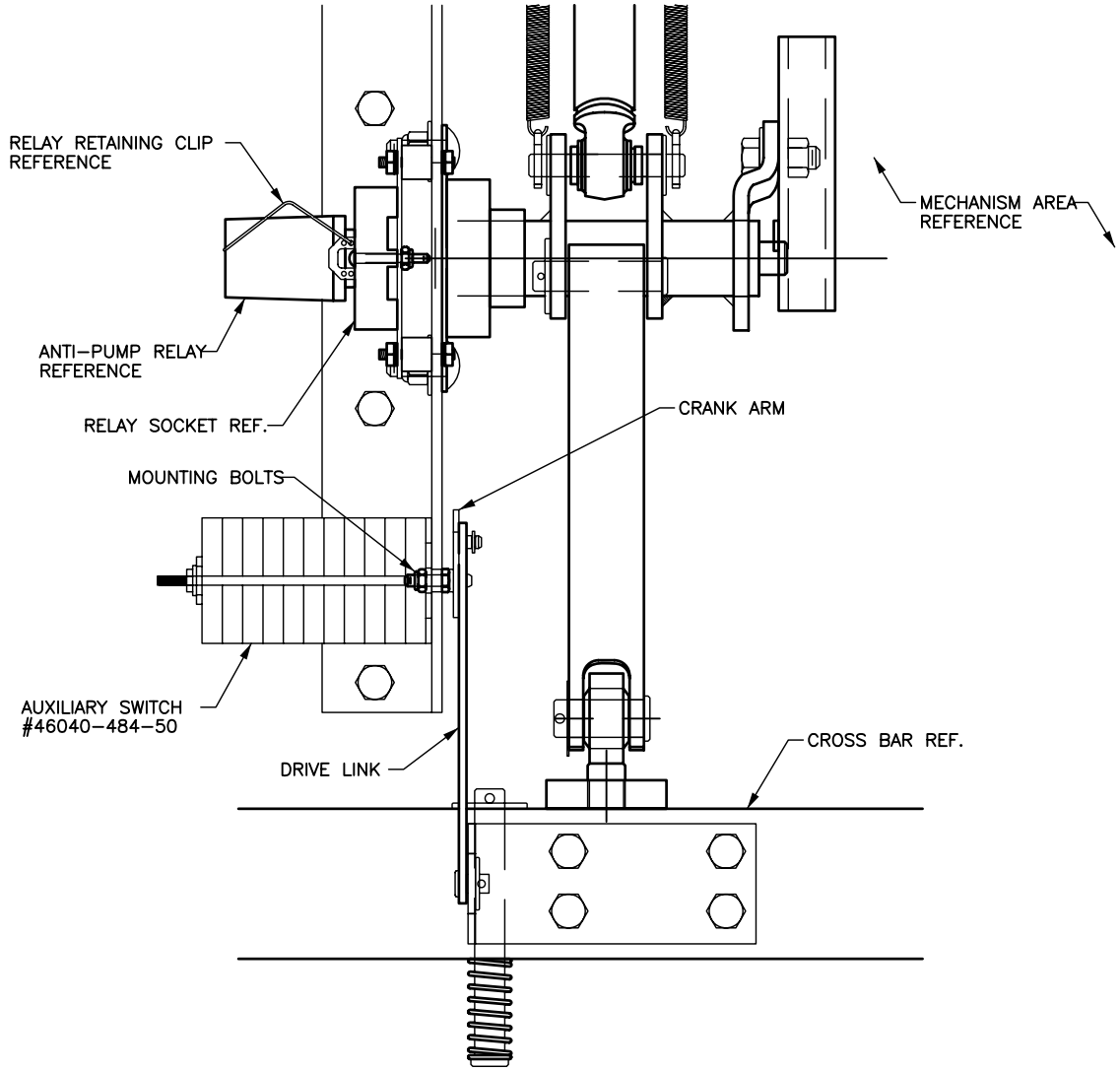

⚠ WARNING

HAZARD OF PERSONAL INJURY OR EQUIPMENT DAMAGE.

BEFORE PERFORMING ANY MAINTENANCE OR REPAIR WORK:

- ALWAYS REMOVE THE CIRCUIT BREAKER COMPLETELY FROM THE CELL.
- PRESS OPEN, CLOSE, AND OPEN PUSHBUTTONS TO DISCHARGE ALL SPRINGS.

FAILURE TO OBSERVE THESE PRECAUTIONS CAN CAUSE DEATH OR SEVERE PERSONAL INJURY!

TOOLS REQUIRED:

- 7/16 WRENCH (FRONT COVER)
- 13mm WRENCH (FRONT COVER)
- 5/16 WRENCH
- 3/8 WRENCH
- SCREWDRIVER

INSTRUCTIONS:

1) REMOVE FRONT COVER.
2) LOCATE AUXILIARY SWITCH BELOW ANTI–PUMP RELAY.
3) REMOVE THE AUXILIARY SWITCH BY DISCONNECTING THE SWITCH CRANK ARM FROM THE DRIVE LINK AND REMOVING THE TWO MOUNTING BOLTS ON THE SWITCH BRACKET.
4) IF A WIRING DIAGRAM IS NOT AVAILABLE MAKE A LIST OF ALL WIRES (WIRE MARKERS) AND THE SWITCH TERMINAL NUMBER.
5) CONNECT THE WIRING TO THE NEW AUXILIARY SWITCH TERMINALS.
6) BOLT THE AUXILIARY SWITCH TO THE SWITCH BRACKET, IN THE SAME ORIENTATION AS THE ORIGINAL SWITCH.
7) RECONNECT THE AUXILIARY SWITCH DRIVE LINK TO THE AUXILIARY SWITCH CRANK ARM.
8) MANUALLY CHARGE THE CLOSING SPRINGS AND CLOSE THE BREAKER MANUALLY TO VERIFY THAT THE AUXILIARY SWITCH "a" CONTACTS ARE CLOSED AND THAT THE SWITCH IS FUNCTIONING PROPERLY.
9) INSTALL FRONT COVER.
10) APPLY CONTROL VOLTAGE TO VERIFY PROPER OPERATION.

STANDARD TOLERANCE UNLESS OTHERWISE SPECIFIED	LINEAR DIMENSIONS	ONE PLACE DECIMAL ± .060 TWO PLACE DECIMAL ± .030 THREE PLACE DECIMAL ± .015	DESIGN LOC: WC	USED ON: VR BREAKERS	ECO: .	PRINTS TO: -- -- -- -- -- -- -- --	SQUARE D COMPANY POWER EQUIPMENT	
	HOLE DIMENSIONS	PUNCHED/DRILLED ± .005	DRAWN BY: BSM	RAWSTOCK: ----	DATE: 12/20/13	TITLE: AUXILIARY SWITCH		
	ANGLES	DIMENSIONED ± 1° UNDIMENSIONED 90°± 2°	CHKD BY: BSM	MATERIAL DESCRIPTION: ----	SCALE: 1 / 2	PART# 46040–484–50 QTY: –	B 46040–484–50	REV *
			ENGINEER: BSM	FINISH DESCRIPTION: ----				

SCALE: 2.00