REV	ECO	BY	DATE

This engineering drawing (CAD / CAM or otherwise) is the proprietary property of Square D Company, not part of the public domain, and is issued with the express understanding and agreement that it is not to be reproduced or copied in whole or in part or used for furnishing information to others, or used directly or indirectly, in any way detrimental to the interest of Square D Company and is to be returned upon request by Square D Company. All Rights Reserved.

© 1989 Square D Company

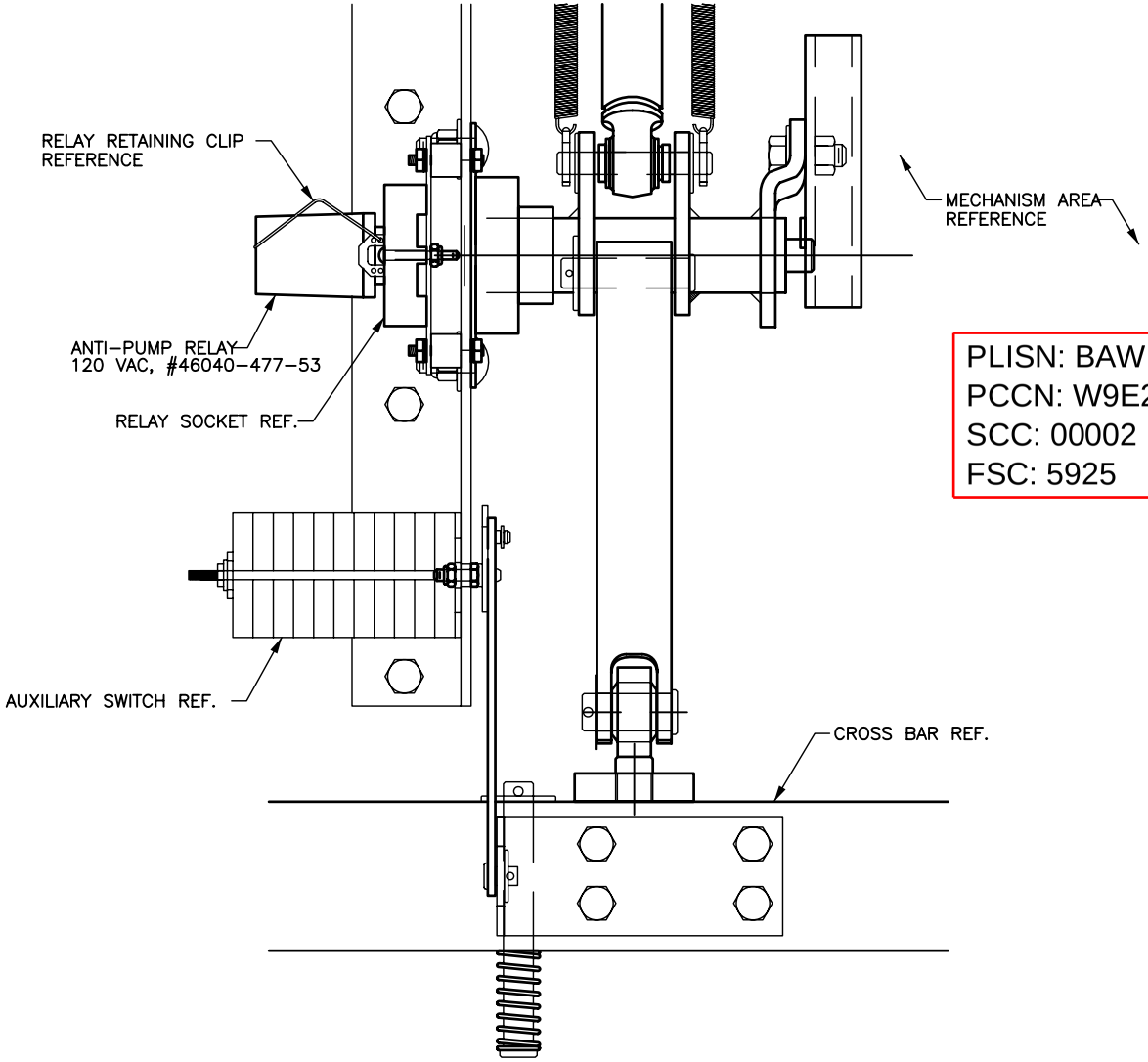

PLISN: BAWL
PCCN: W9E215
SCC: 00002
FSC: 5925

⚠WARNING

HAZARD OF PERSONAL INJURY OR EQUIPMENT DAMAGE.

BEFORE PERFORMING ANY MAINTENANCE OR REPAIR WORK:

- ALWAYS REMOVE THE CIRCUIT BREAKER COMPLETELY FROM THE CELL.
- PRESS OPEN, CLOSE, AND OPEN PUSHBUTTONS TO DISCHARGE ALL SPRINGS.

FAILURE TO OBSERVE THESE PRECAUTIONS CAN CAUSE DEATH OR SEVERE PERSONAL INJURY!

TOOLS REQUIRED:

- 7/16 WRENCH (FRONT COVER)
- 13mm WRENCH (FRONT COVER)

INSTRUCTIONS:

1) REMOVE FRONT COVER.
2) LOCATE ANTI–PUMP RELAY ABOVE AUXILIARY SWITCH.
3) REMOVE BY LIFTING RETAINING CLIP AND BY PULLING RELAY OUT OF SOCKET.
4) INSTALL NEW ANTI–PUMP RELAY INTO EXISTING SOCKET. SECURE BY PLACING RETAINING CLIP OVER RELAY.
5) INSTALL FRONT COVER.
6) APPLY CONTROL VOLTAGE TO VERIFY PROPER OPERATION.

STANDARD TOLERANCE UNLESS OTHERWISE SPECIFIED	LINEAR DIMENSIONS	ONE PLACE DECIMAL ± .060 TWO PLACE DECIMAL ± .030 THREE PLACE DECIMAL ± .015	DESIGN LOC: WC	USED ON: VR BREAKERS	ECO: .	PRINTS TO: -- -- -- -- -- -- -- --	SQUARE D COMPANY POWER EQUIPMENT
	HOLE DIMENSIONS	PUNCHED/DRILLED ± .005	DRAWN BY: BSM CHKD BY: BSM	RAWSTOCK: ---- MATERIAL DESCRIPTION: ----	DATE: 12/20/13	TITLE: ANTI–PUMP RELAY, 120VAC	
	ANGLES	DIMENSIONED ± 1° UNDIMENSIONED 90°± 2°	ENGINEER: BSM	FINISH DESCRIPTION: ----	SCALE: 1 / 2	PART# 46040–477–53 QTY: –	B 46040–477–53 REV *

SCALE: 2.00