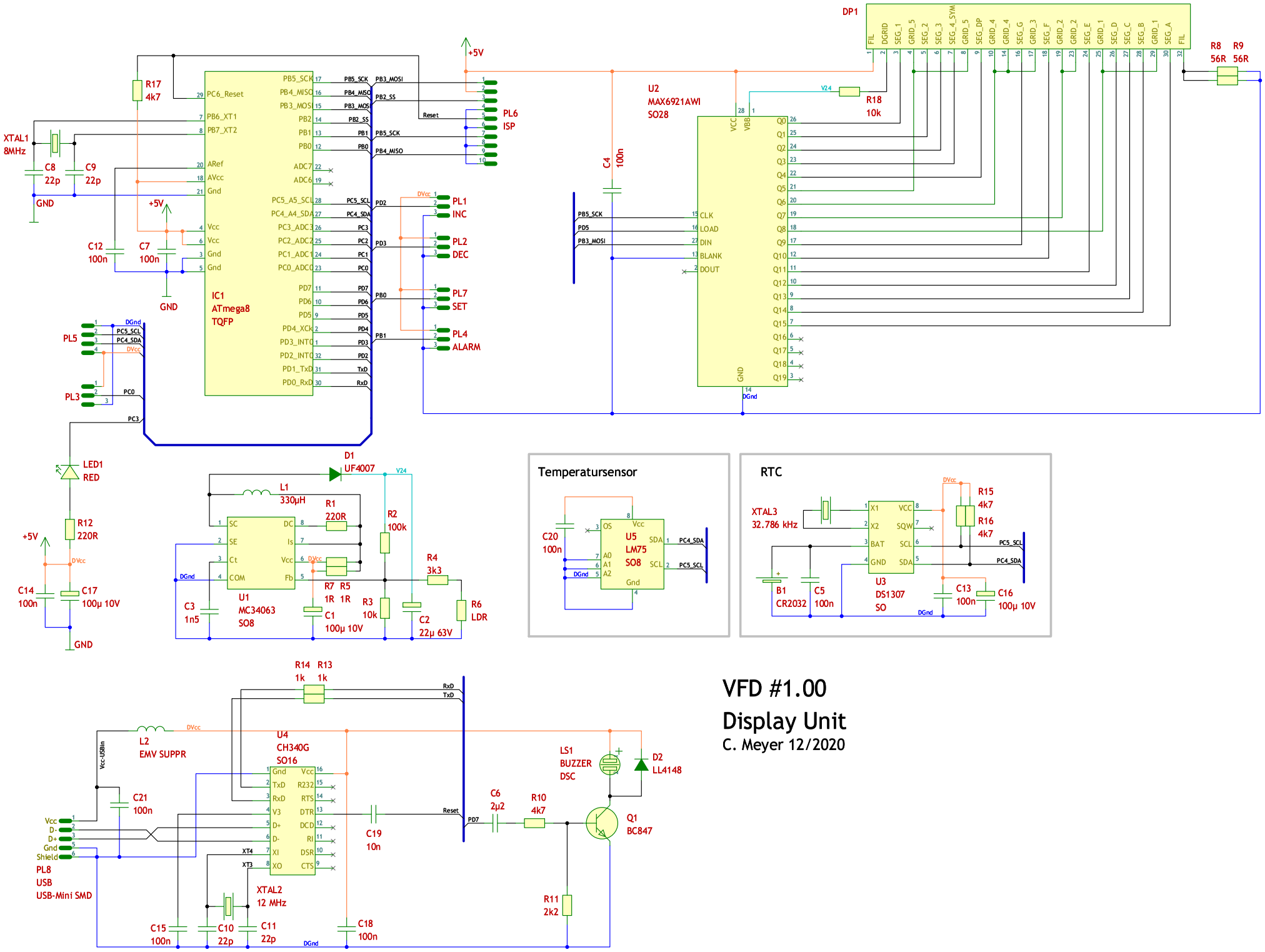
DP1
R8 56R
R9 56R
R17 4k7
R18 10k
U2 MAX6921AWI SO28
XTAL1 8MHz
C8 22p
C9 22p
C12 100n
C7 100n
C4 100n
IC1 ATmega8 TQFP
PL6 ISP
PL1 INC
PL2 DEC
PL7 SET
PL4 ALARM
PL5
PL3
LED1 RED
R12 220R
C14 100n
C17 100µ 10V
D1 UF4007
L1 330µH
R1 220R
R2 100k
R4 3k3
R6 LDR
C3 1n5
U1 MC34063 SO8
R7 1R
R5 1R
C1 100µ 10V
R3 10k
C2 22µ 63V
Temperatursensor
C20 100n
U5 LM75 SO8
RTC
XTAL3 32.786 kHz
R15 4k7
R16 4k7
B1 CR2032
C5 100n
U3 DS1307 SO
C13 100n
C16 100µ 10V
R14 1k
R13 1k
L2 EMV SUPPR
U4 CH340G SO16
C21 100n
C19 10n
C6 2µ2
R10 4k7
LS1 BUZZER DSC
D2 LL4148
Q1 BC847
R11 2k2
PL8 USB USB-Mini SMD
XTAL2 12 MHz
C15 100n
C10 22p
C11 22p
C18 100n
VFD #1.00
Display Unit
C. Meyer 12/2020