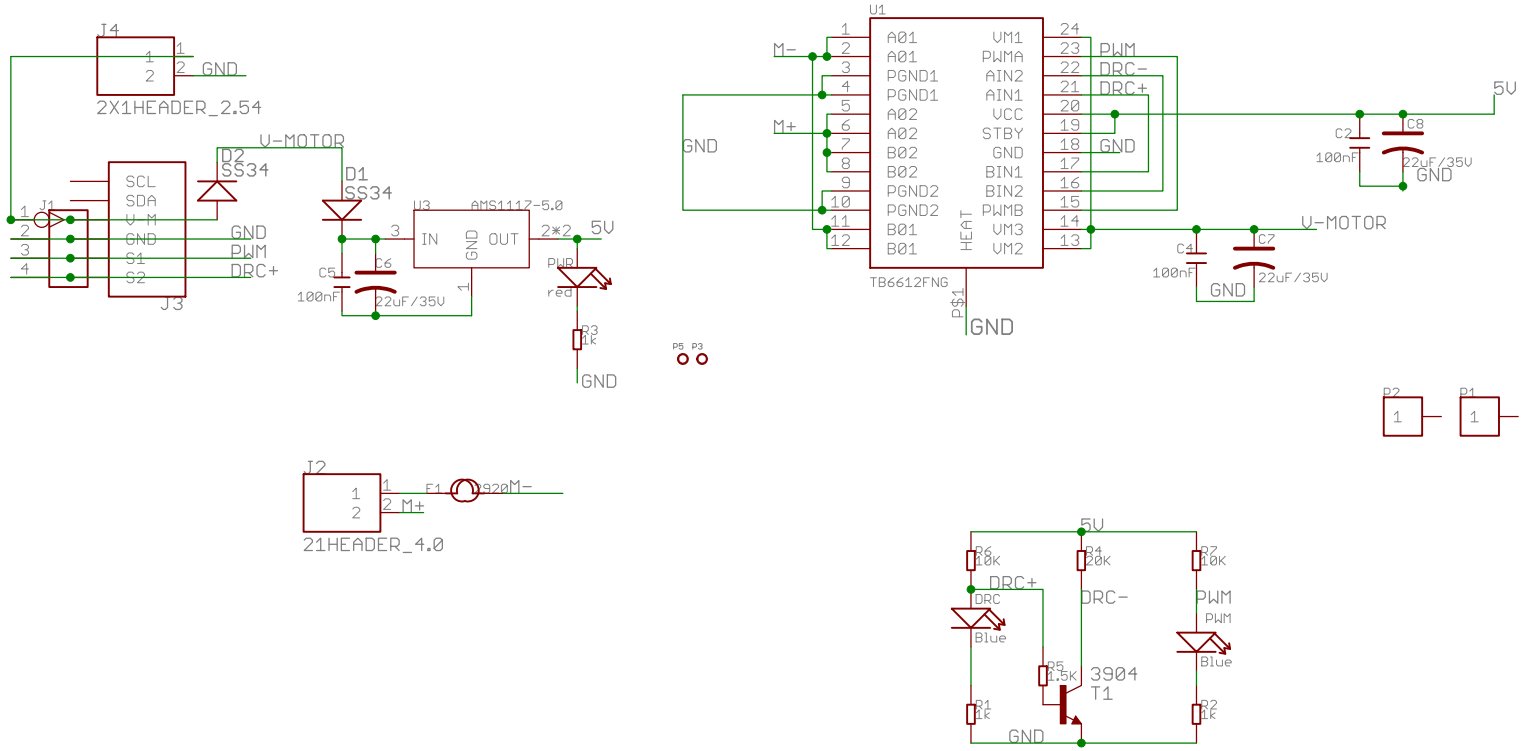

Me-Motor Driver v2.0

www.makeblock.cc

2013/6/2 19:52:36

Sheet: 1/1