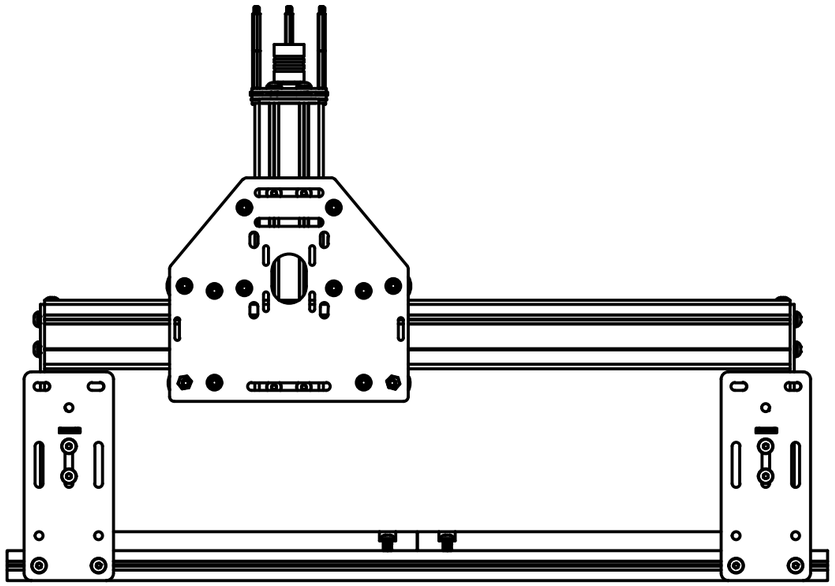

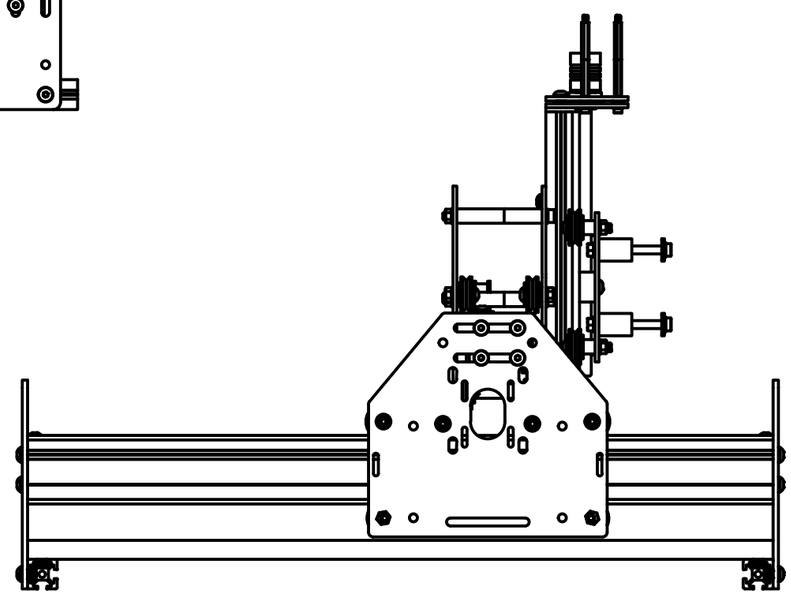

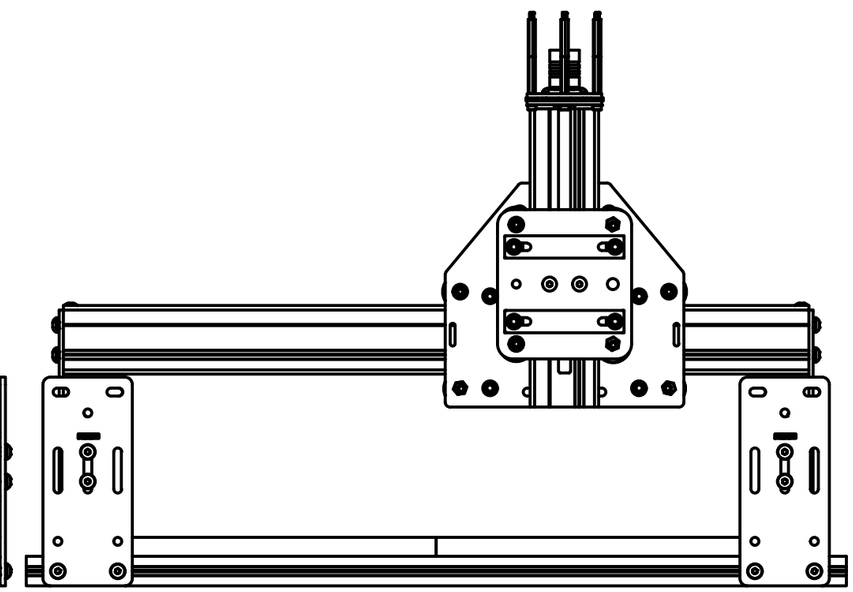

DRAWN Edward	12/9/2013	**Project Shapeoko**
		TITLE
		SIZE B / DWG NO / REV
		www.shapeoko.com / SHEET 1 OF 1

CC BY SA