RevNo	Revision note	Date	Signature	Checked

TODO
* Check courtyards of components.

MAYBE
* Upgrade OT1-6 Dual MOSFETs.

DONE
* Diode footprints/model.
* 2xI2C mux SDA/SDC/INT signals on a header.
* Connector for front-panel USB socket.
* Used 8xI2C mux INT signals.
* Load-cell amplifier (HX717)
* VUSB sense input.
* Additional 5V rail for onboard and up-lights.
* Raspberry Pi 5 power connector
* Supercap/RTC osc - deleted.
* Models for JST-XH (e.g 'B4B-XH-A(LF)(SN)')
* Ethernet PHY
* MOSFET + connector for external ethernet link leds.
* 3V3 power from core board
* LEDs for power rails.
* RGB LED output, for up-lights
* 2x vacuum sensors.
* Head RS422 (non-isolated power).
* Analog mux (2x1 in 4 out).

NO
* reverse polarity protection, need multiple high-current fets like SUD50P06-15-GE3.

Itemref	Quantity	Title/Name, designation, material, dimension etc		Article No./Reference	
Designed by	Checked by	Approved by - date - 00/00/00	File name	Date 00/00/00	Scale 1:1
Designed by Dominic Clifton				Edition 0	Sheet 1/1

RevNo	Revision note	Date	Signature	Checked

Main 5V power

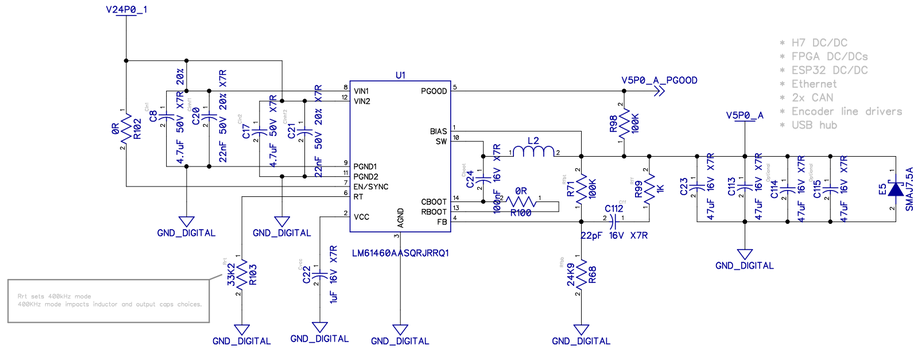

Secondary 5V power

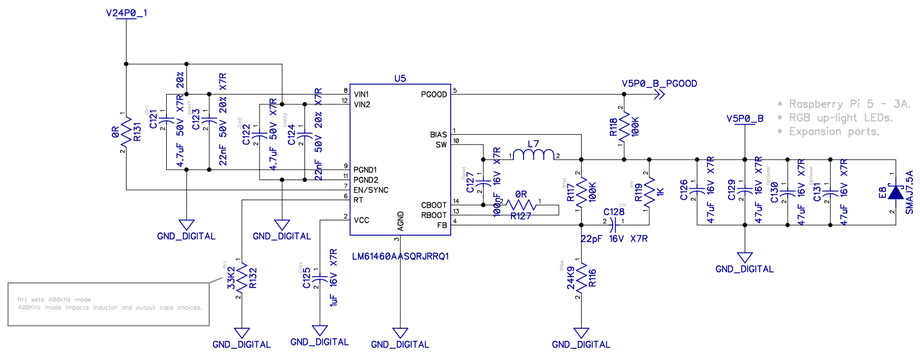

7V supply for the head ~ 1A

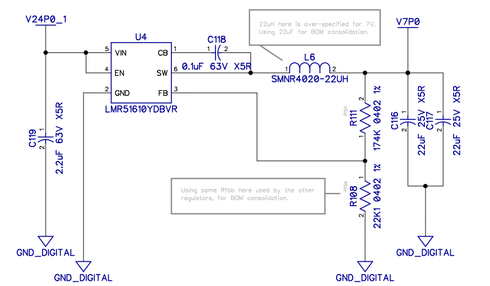

3V3 supply + supply ORing with continuous supply output

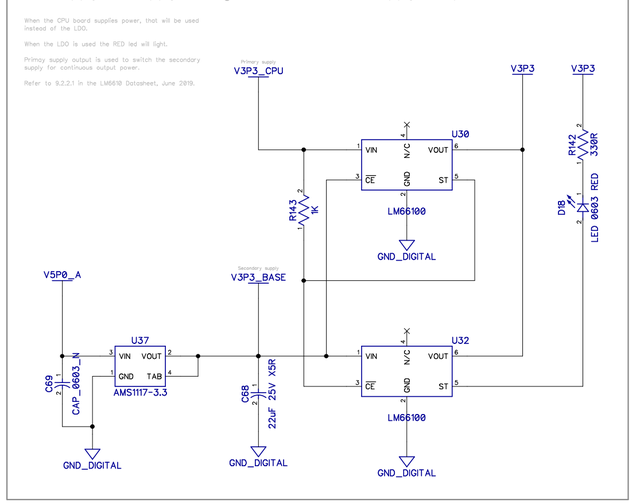

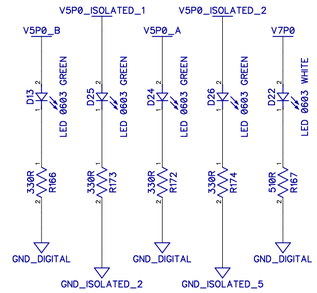

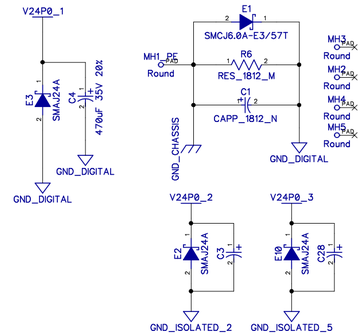

Itemref	Quantity	Title/Name, designation, material, dimension etc		Article No./Reference	
Designed by	Checked by	Approved by - date - 00/00/00	File name	Date 00/00/00	Scale 1:1
Designed by Dominic Clifton				Edition 0	Sheet 1/1

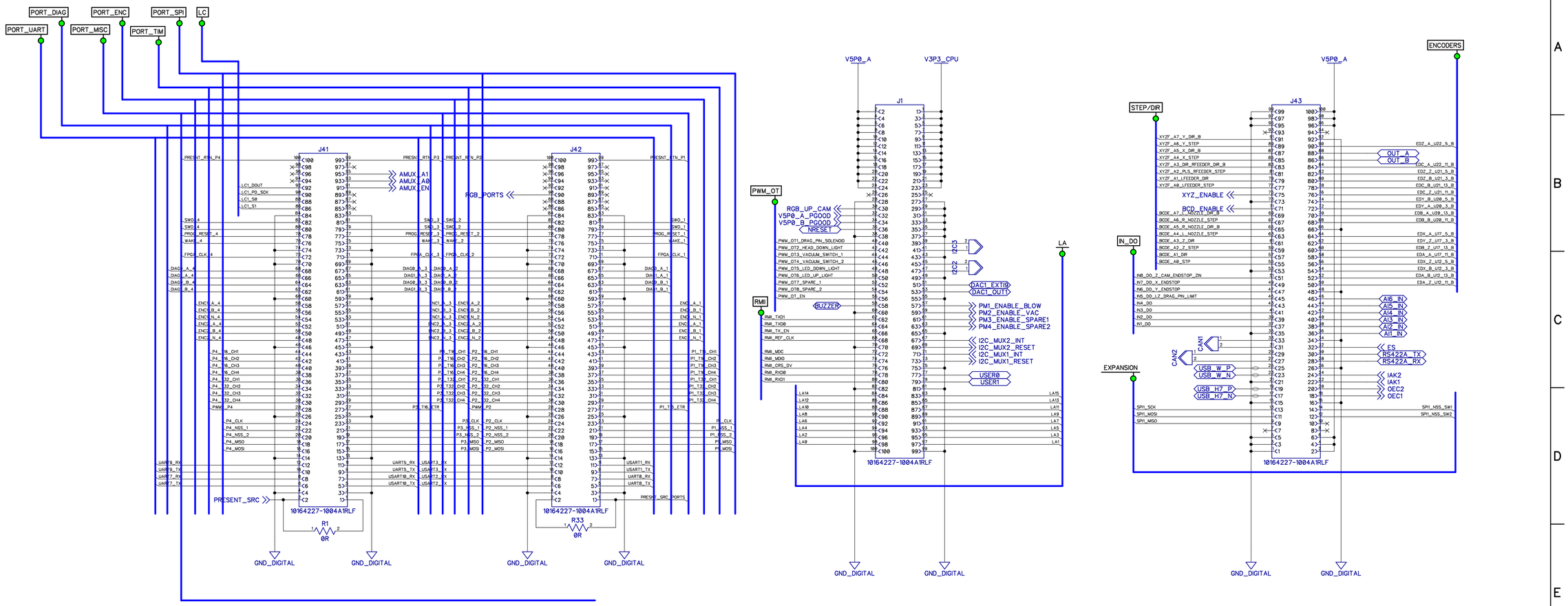

Card detection system

A pull-up to 3v3 is generated on the core board, signal is called PRESENT_SRC.
On the core board, this signal comes in on the left hand connector, pin 2.
The base board then routes this to pin 1 on the same connector.
The core board then routes pin 1 from the left connector to pin 2 on the right connector as PRESENT_THROUGH.
The base board this routes this under the right connector from pin 2 to pin 1.
The base board then routes this same signal from pin 1 on the right connector to each of the ports, as PRESENT_SRC_PORTS (aka PRESENT_BASE_RTN).
The port expansion cards then route the signal back to the FPGA on PRESENT_RTN_P1/2/3/4.

The FPGA then has 5 input pins.
One for pin 1 on right connector.
Then one for each PORT_RTN signal.

The FPGA can then detect correct seating of the core board.
The FPGA can then detect 4 different port expansion card correct seatings.

The pins chosen ensure each connector or expansion
card must be fully seated at both ends of the connector or slot.

RevNo	Revision note	Date	Signature	Checked

Itemref	Quantity	Title/Name, designation, material, dimension etc	Article No./Reference

Designed by	Checked by	Approved by - date - 00/00/00	File name	Date 00/00/00	Scale 1:1

Designed by
Dominic Clifton

Edition	Sheet
0	1/1

RevNo	Revision note	Date	Signature	Checked

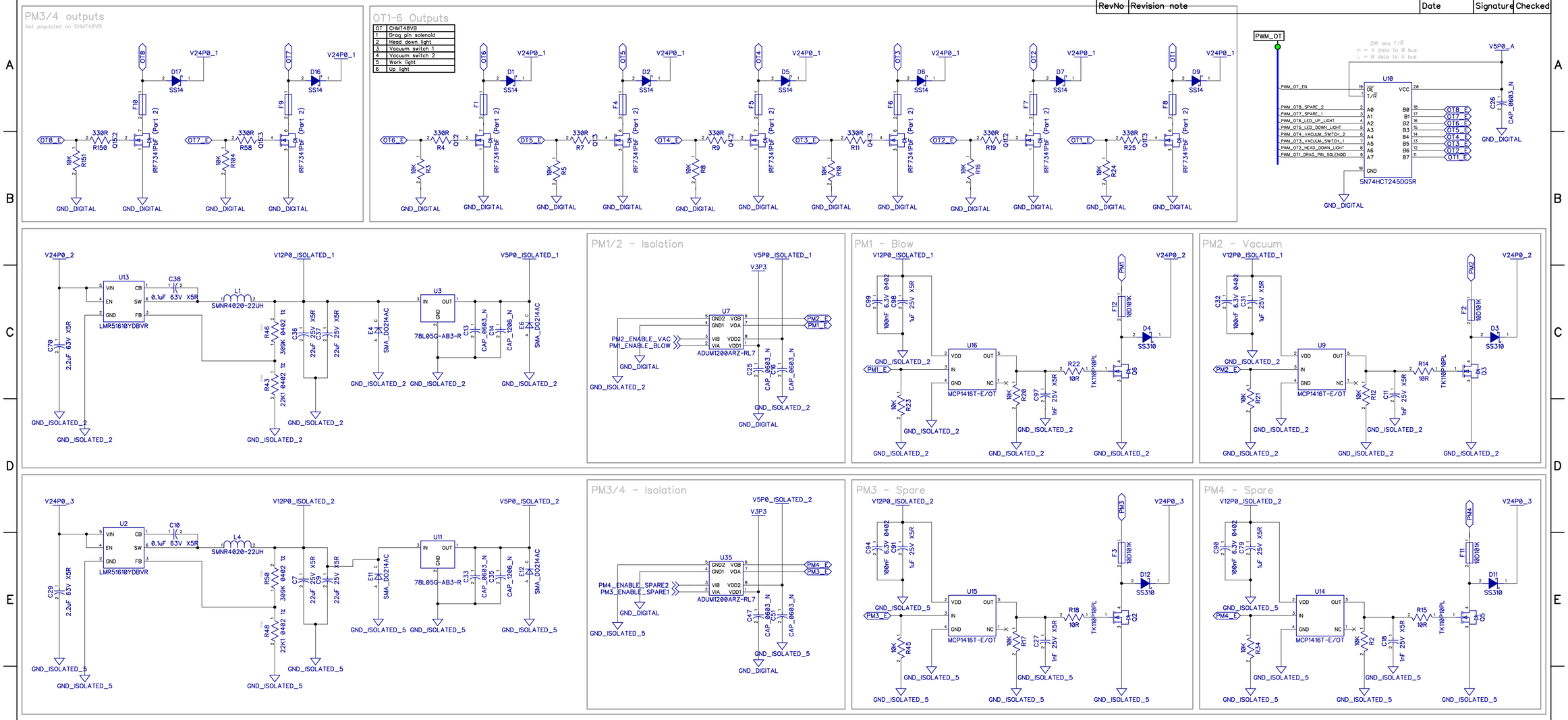

Itemref	Quantity	Title/Name, designation, material, dimension etc		Article No./Reference	
Designed by	Checked by	Approved by - date - 00/00/00	File name	Date 00/00/00	Scale 1:1
Designed by Dominic Clifton				Edition 0	Sheet 1/1

RevNo	Revision note	Date	Signature	Checked

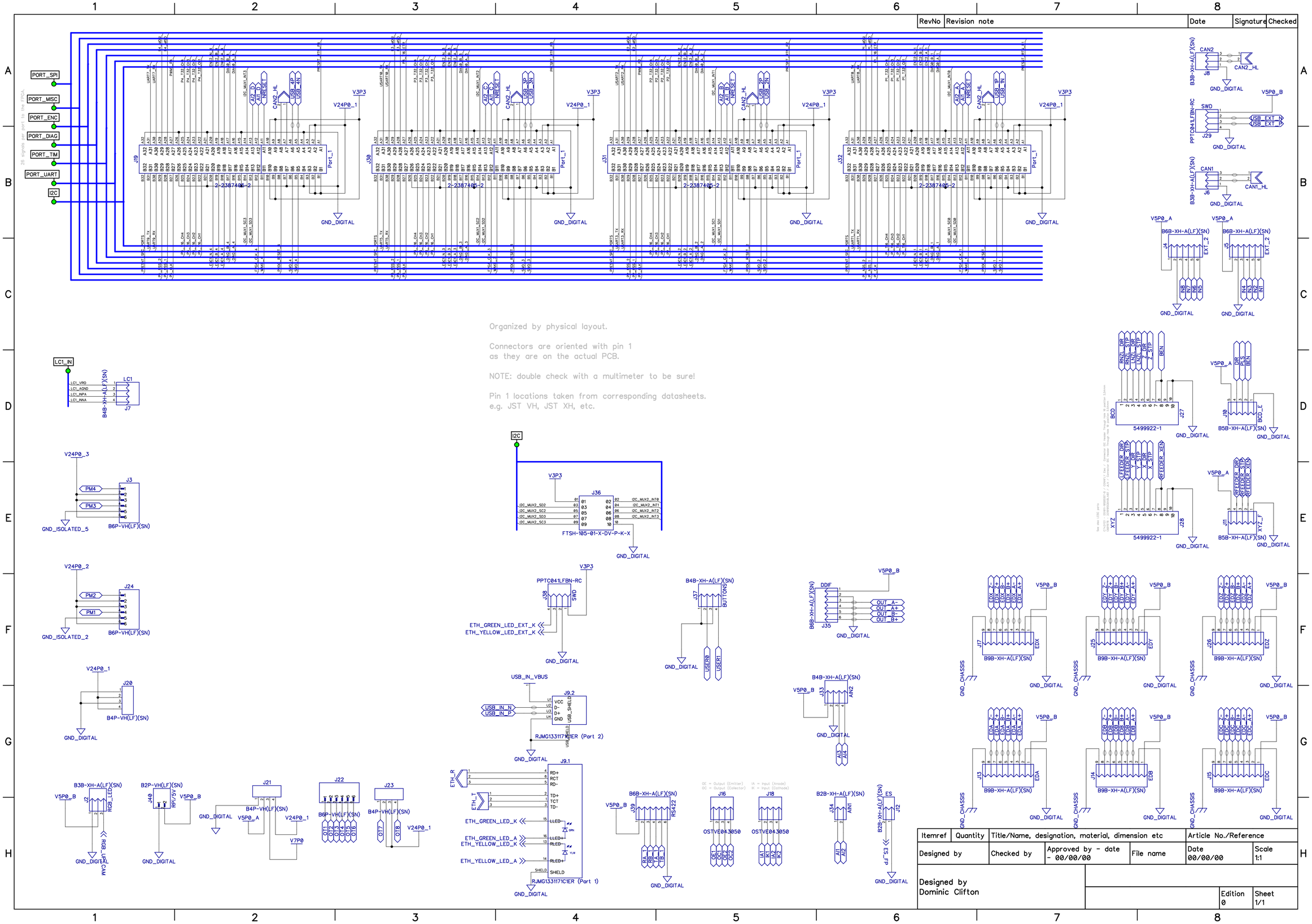

Itemref	Quantity	Title/Name, designation, material, dimension etc	Article No./Reference
Designed by	Checked by	Approved by - date - 00/00/00	File name
Date 00/00/00	Scale 1:1		

Designed by
Dominic Clifton

Edition	Sheet
0	1/1

RevNo	Revision note	Date	Signature	Checked

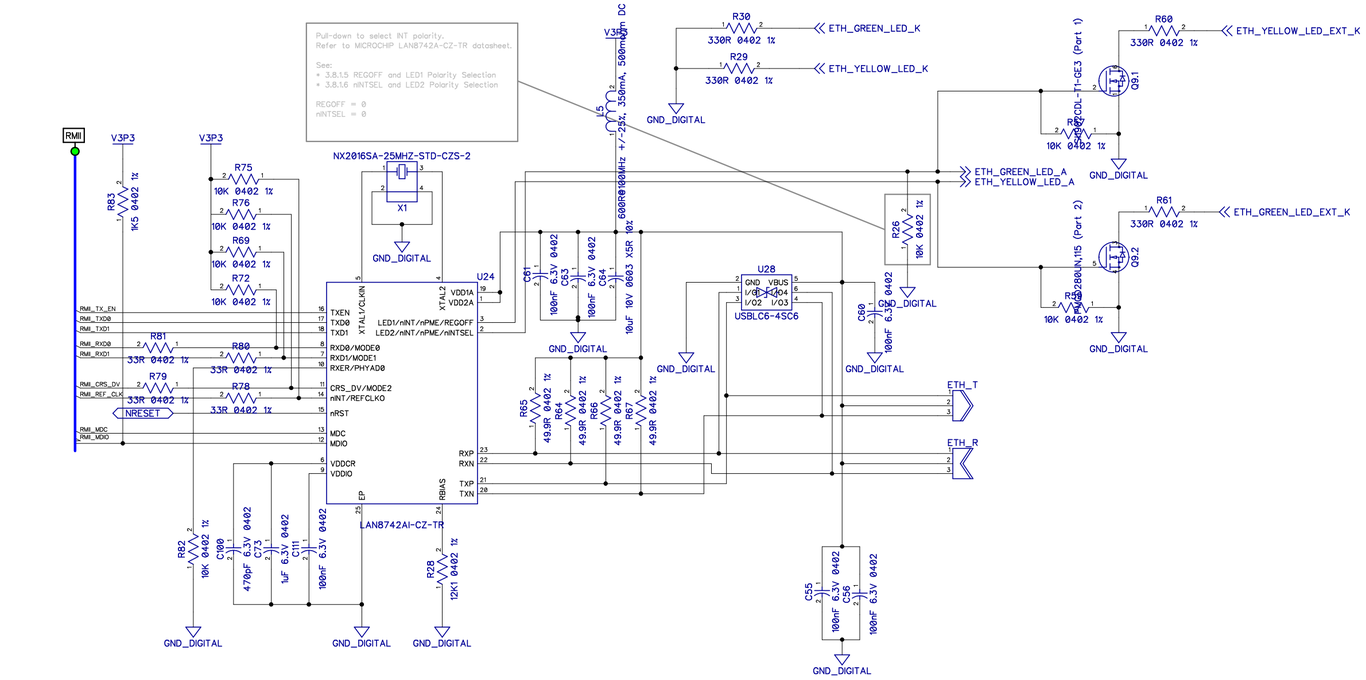

Head comms via RS422

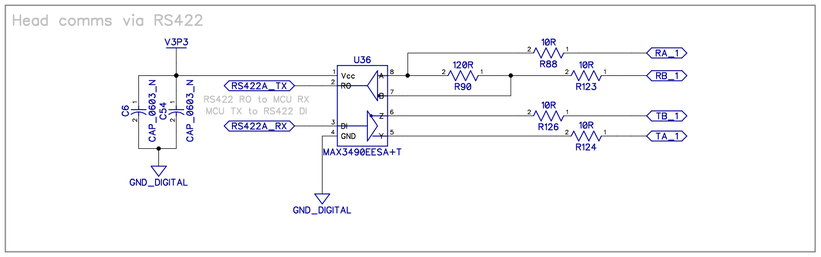

I2C MUX 1 (Ports)

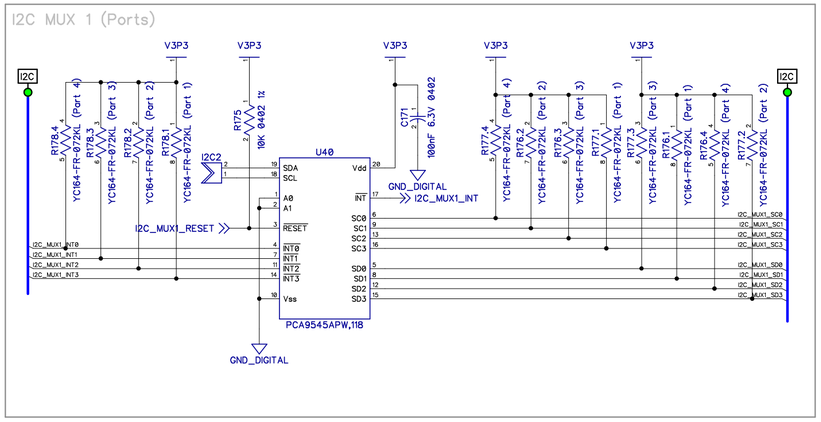

I2C MUX (Sensors)

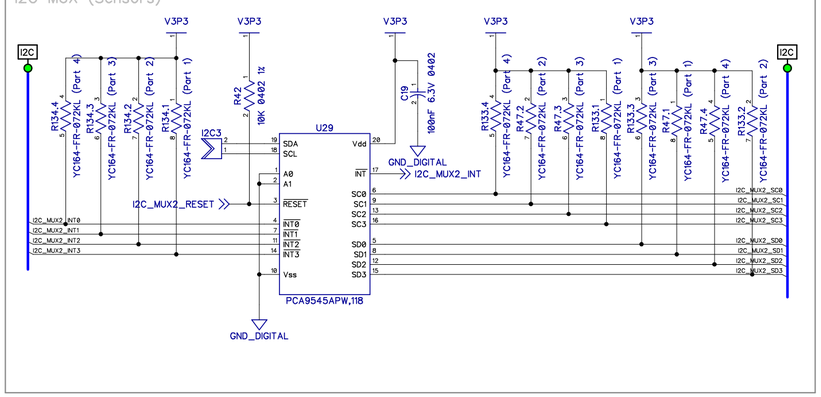

7 Port USB 2 hub.

Up-stream port: A PC or SoC (Raspberry Pi)

Downstream ports:
1-4) Ports 1-4
4-7) H7, FPGA, ESP32

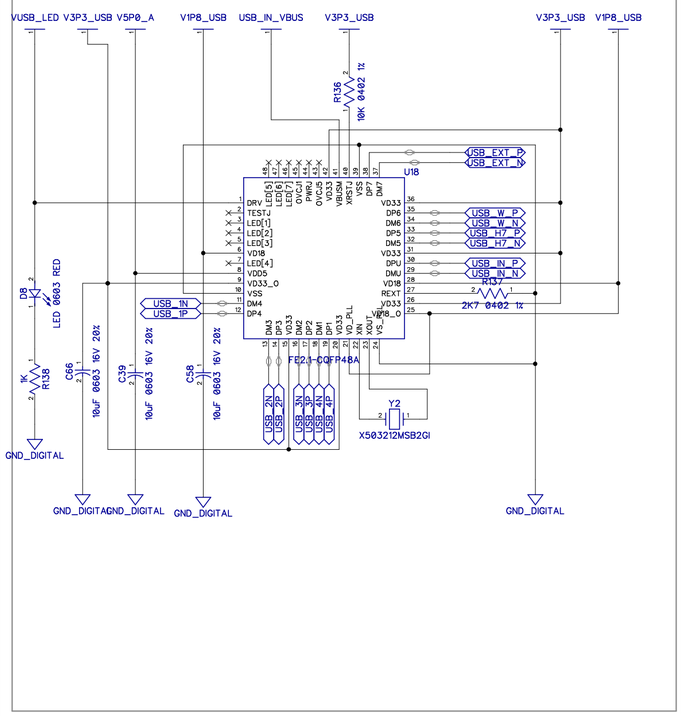

FD-CAN1 8Mbps

+5V CAN voltage. Always on.

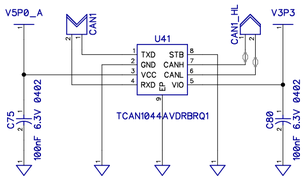

Pin compatible devices, note VIO requirement.

TCAN1044AVDRBRQ1
TCAN1057AVDRBRQ1
MCP2558FDT-H/MF

CAN1 termination

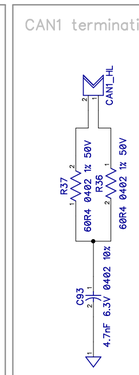

I2C Pull-Ups

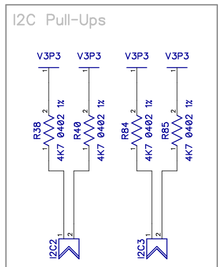

FD-CAN2 8Mbps

+5V CAN voltage. Always on.

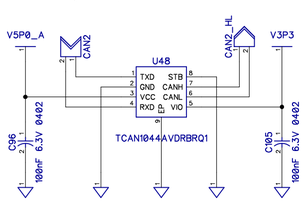

Pin compatible devices, note VIO requirement.

TCAN1044AVDRBRQ1
TCAN1057AVDRBRQ1
MCP2558FDT-H/MF

CAN2 termination

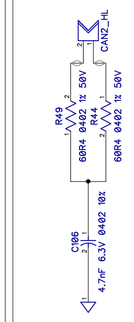

Itemref	Quantity	Title/Name, designation, material, dimension etc		Article No./Reference	
Designed by	Checked by	Approved by - date - 00/00/00	File name	Date 00/00/00	Scale 1:1
Designed by Dominic Clifton				Edition 0	Sheet 1/1

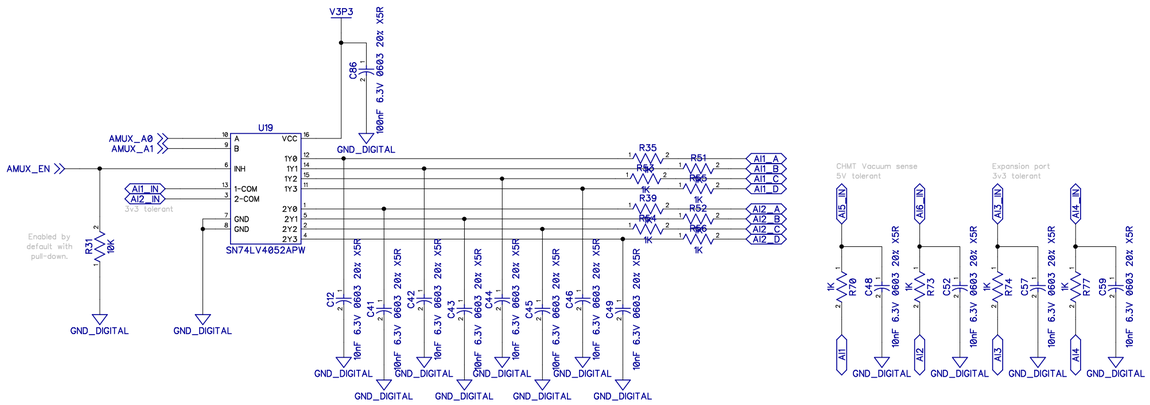

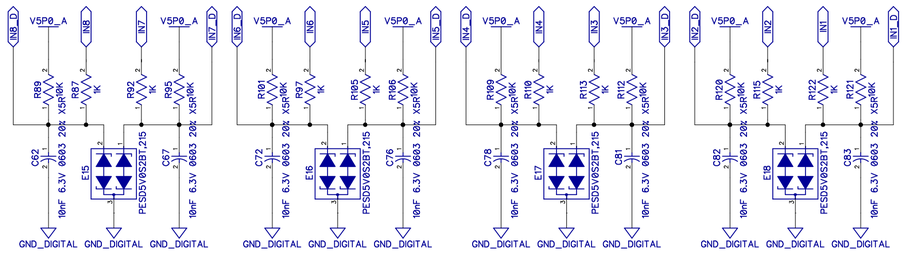

RevNo	Revision note	Date	Signature	Checked

Itemref	Quantity	Title/Name, designation, material, dimension etc	Article No./Reference

Designed by	Checked by	Approved by - date - 00/00/00	File name	Date 00/00/00	Scale 1:1

Designed by
Dominic Clifton

Edition	Sheet
0	1/1

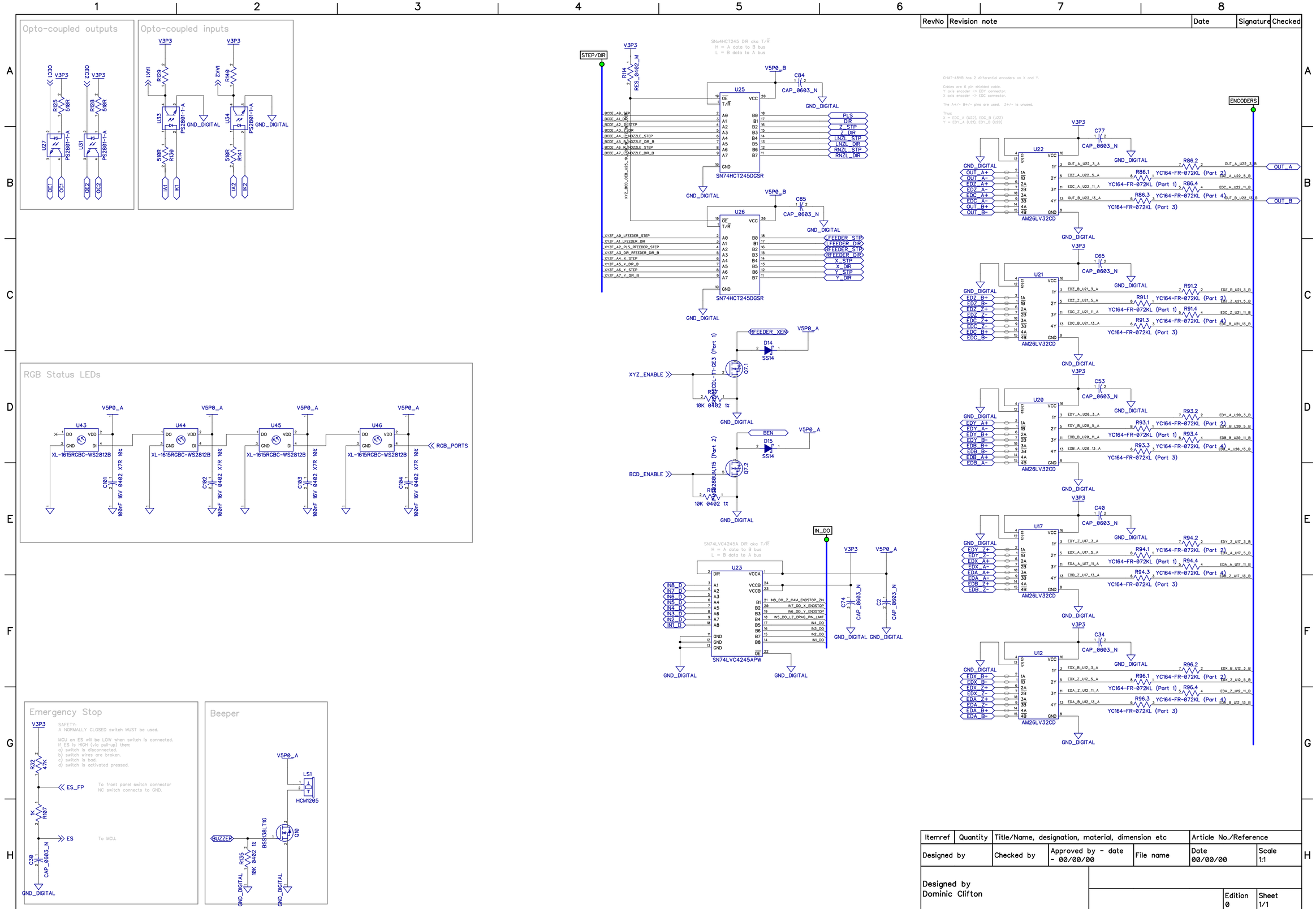

RevNo	Revision note	Date	Signature	Checked

Itemref	Quantity	Title/Name, designation, material, dimension etc		Article No./Reference	
Designed by	Checked by	Approved by - date - 00/00/00	File name	Date 00/00/00	Scale 1:1
Designed by Dominic Clifton				Edition 0	Sheet 1/1

RevNo	Revision note	Date	Signature	Checked

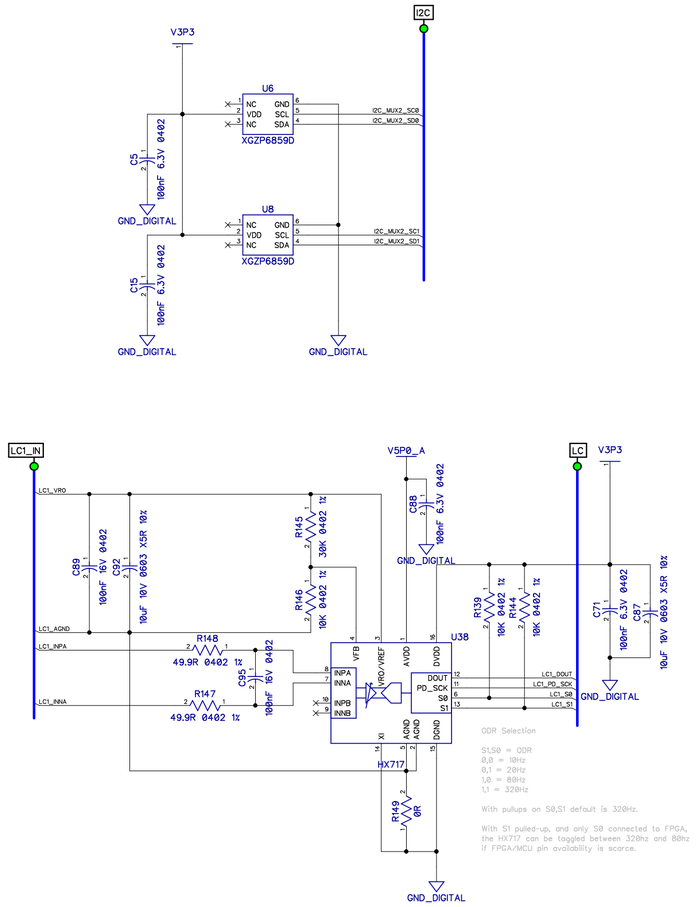

Itemref	Quantity	Title/Name, designation, material, dimension etc		Article No./Reference	
Designed by		Checked by	Approved by - date - 00/00/00	File name	Date 00/00/00	Scale 1:1
Designed by Dominic Clifton					Edition 0	Sheet 1/1