RevNo	Revision note	Date	Signature	Checked

TODO
* 8xI2C mux INT signals on a header (GPIO expander)
* 2xI2C mux SDA/SDC signals on a header
* CAN termination jumpers.
* Check courtyards of components.
* Diode footprints/model
* upgrade OT1-6 Dual MOSFETs

MAYBE
* connector for front-panel USB socket - should probably go to raspberry-pi - need a small break-out PCB in that case.
* reverse polarity protection, need multiple high-current fets like SUD50P06-15-GE3.
* VUSB sense input.

DONE
* Load-cell amplifier (HX717)
* Additional 5V rail for onboard and up-lights.
* Raspberry Pi 5 power connector
* Supercap/RTC osc - deleted.
* Models for JST-XH (e.g 'B4B-XH-A(LF)(SN)')
* Ethernet PHY
* MOSFET + connector for external ethernet link leds.
* 3V3 power from core board
* LEDs for power rails.
* RGB LED output, for up-lights
* 2x vacuum sensors.
* Head RS422 (non-isolated power).
* Analog mux (2x1 in 4 out).

Itemref	Quantity	Title/Name, designation, material, dimension etc		Article No./Reference	
Designed by	Checked by	Approved by - date - 00/00/00	File name	Date 00/00/00	Scale 1:1
Designed by Dominic Clifton				Edition 0	Sheet 1/1

RevNo	Revision note	Date	Signature	Checked

Main 5V power

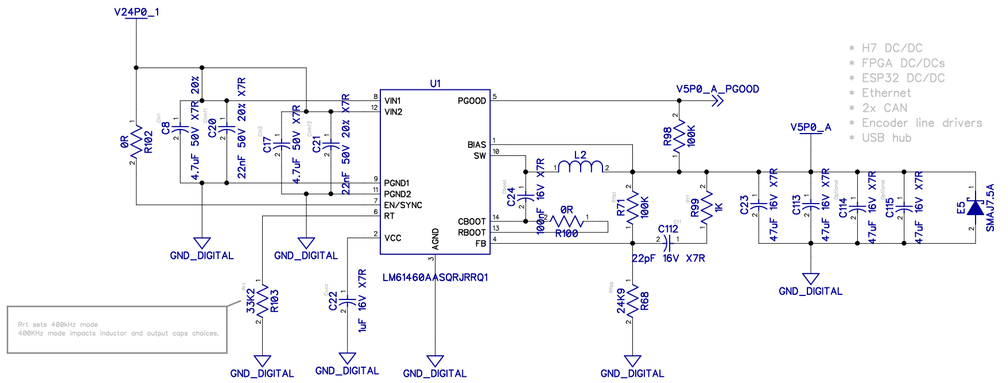

Secondary 5V power

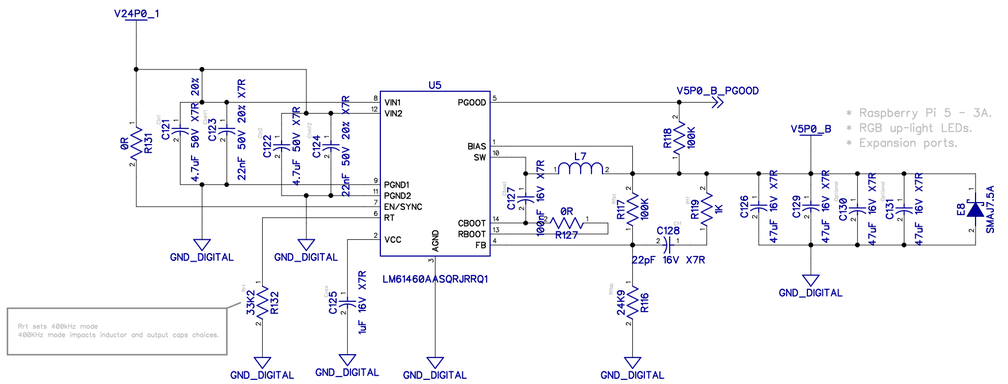

7V supply for the head ~ 1A

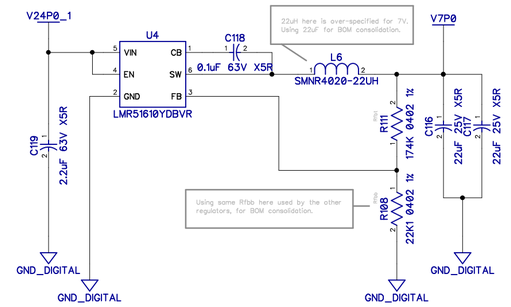

3V3 supply + supply ORing with continuous supply output

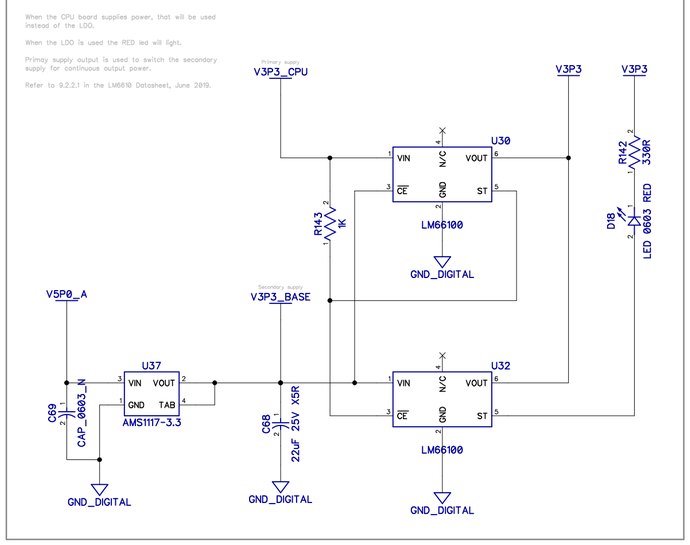

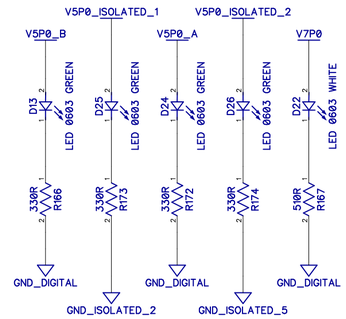

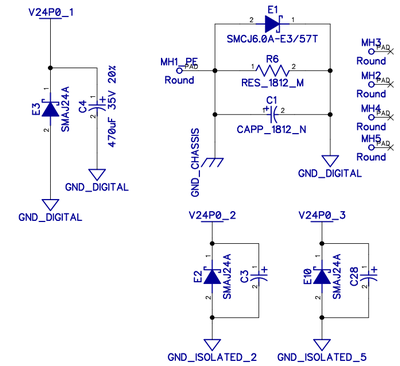

Itemref	Quantity	Title/Name, designation, material, dimension etc		Article No./Reference	
Designed by		Checked by	Approved by - date - 00/00/00	File name	Date 00/00/00	Scale 1:1
Designed by Dominic Clifton					Edition 0	Sheet 1/1

RevNo	Revision note	Date	Signature	Checked

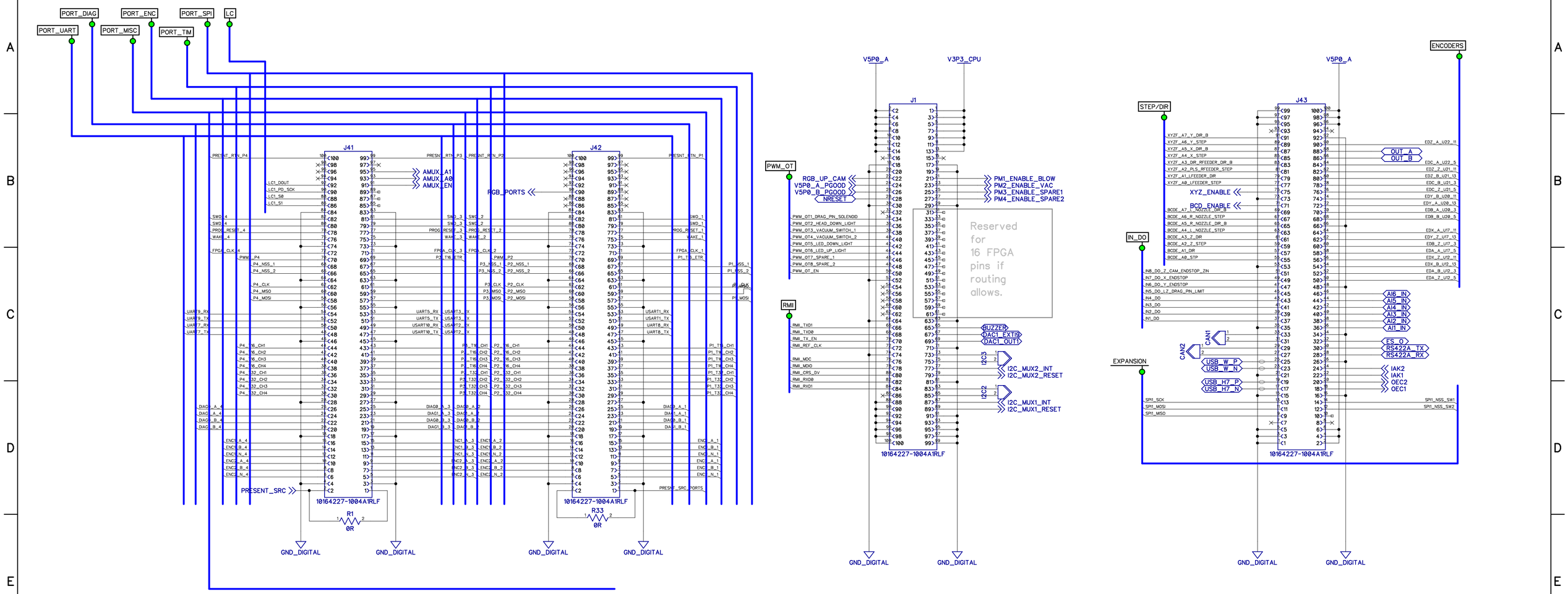

Card detection system

A pull-up to 3v3 is generatd on the core board, signal is called PRESENT_SRC.
On the core board, this signal comes in on the left hand connector, pin 2.
The base board then routes this to pin 1 on the same connector.
The core board then routes pin 1 from the left connector to pin 2 on the right connector as PRESENT_THROUGH.
The base board this routes this under the right connector from pin 2 to pin 1.
The base board then routes this same signal from pin 1 on the right connector to each of the ports, as PRESENT_SRC_PORTS.
The port expansion cards then route the signal back to the FPGA on PRESENT_RTN_P1/2/3/4.

The FPGA then has 5 input pins.
One for pin 1 on right connector.
Then one for each PORT_RTN signal.

The FPGA can then detect correct seating of the core board.
The FPGA can then detect 4 different port expansion card correct seatings.

The pins chosen ensure each connector or expansion
card must be fully seated at both ends of the connector or slot.

Itemref	Quantity	Title/Name, designation, material, dimension etc		Article No./Reference	
Designed by	Checked by	Approved by - date - 00/00/00	File name	Date 00/00/00	Scale 1:1
Designed by Dominic Clifton				Edition 0	Sheet 1/1

RevNo	Revision note	Date	Signature	Checked

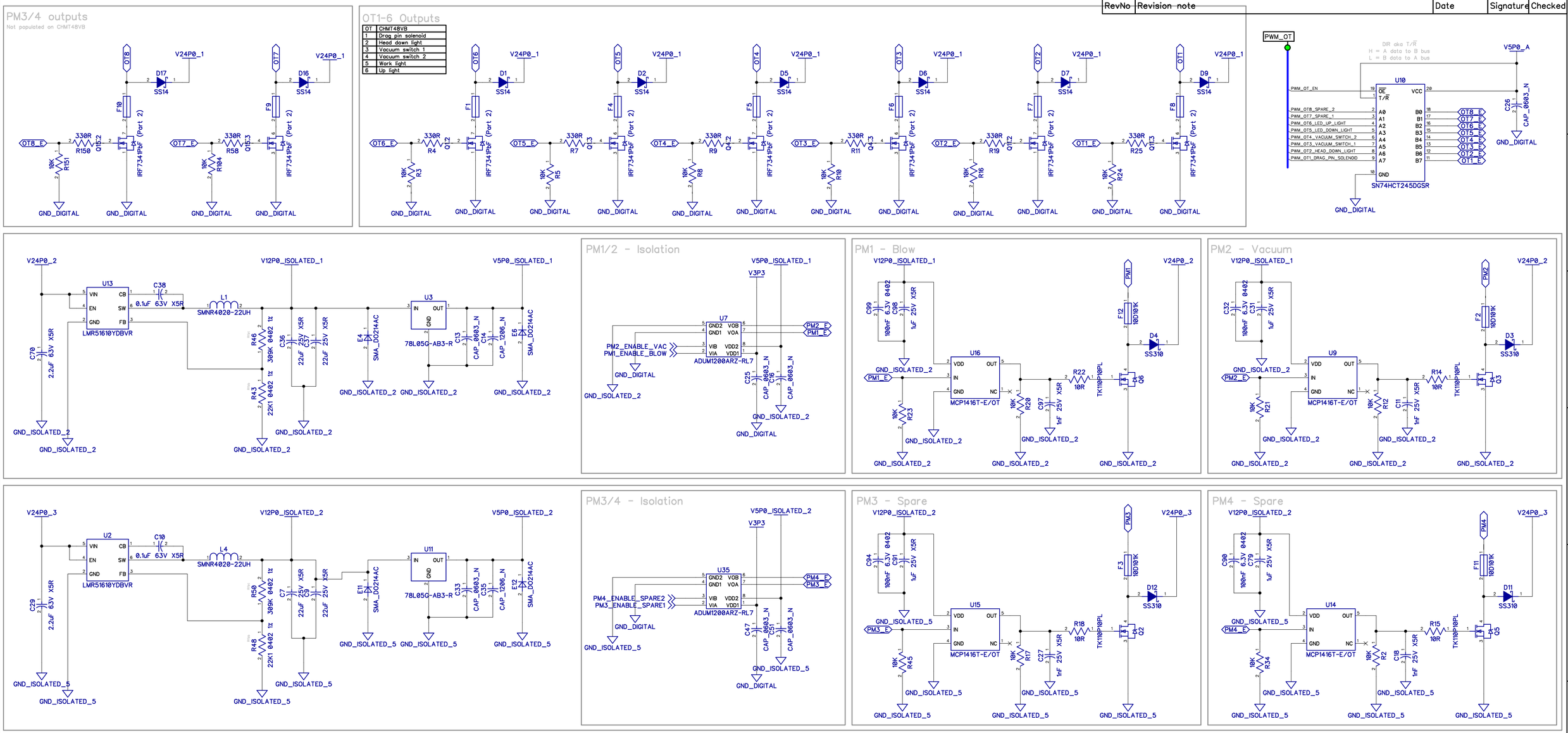

Itemref	Quantity	Title/Name, designation, material, dimension etc	Article No./Reference
Designed by	Checked by	Approved by - date - 00/00/00	File name
Date 00/00/00	Scale 1:1		
Designed by Dominic Clifton			
Edition 0	Sheet 1/1		

RevNo	Revision note	Date	Signature	Checked

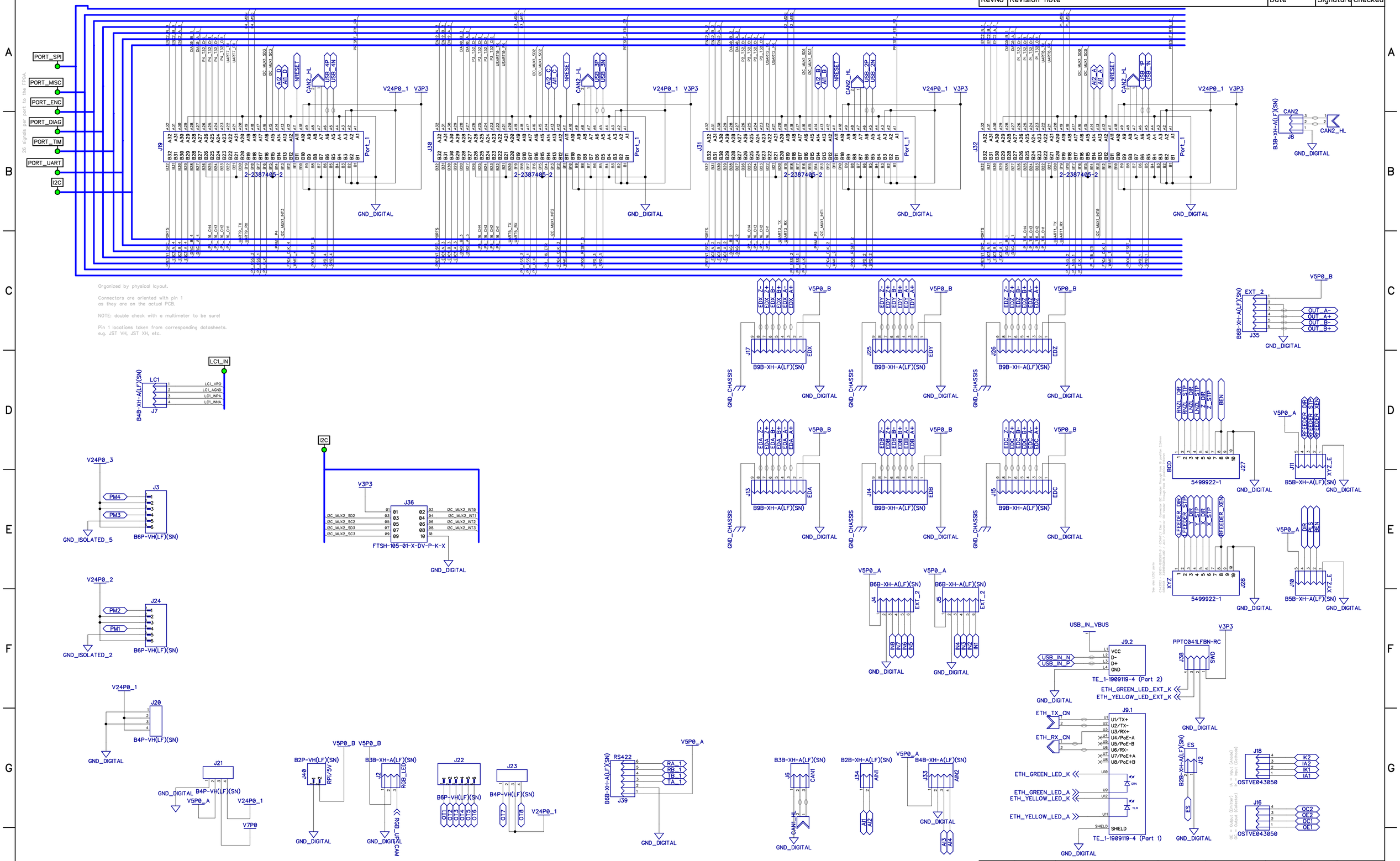

Itemref	Quantity	Title/Name, designation, material, dimension etc		Article No./Reference	
Designed by	Checked by	Approved by - date - 00/00/00	File name	Date 00/00/00	Scale 1:1
Designed by Dominic Clifton				Edition 0	Sheet 1/1

RevNo	Revision note	Date	Signature	Checked

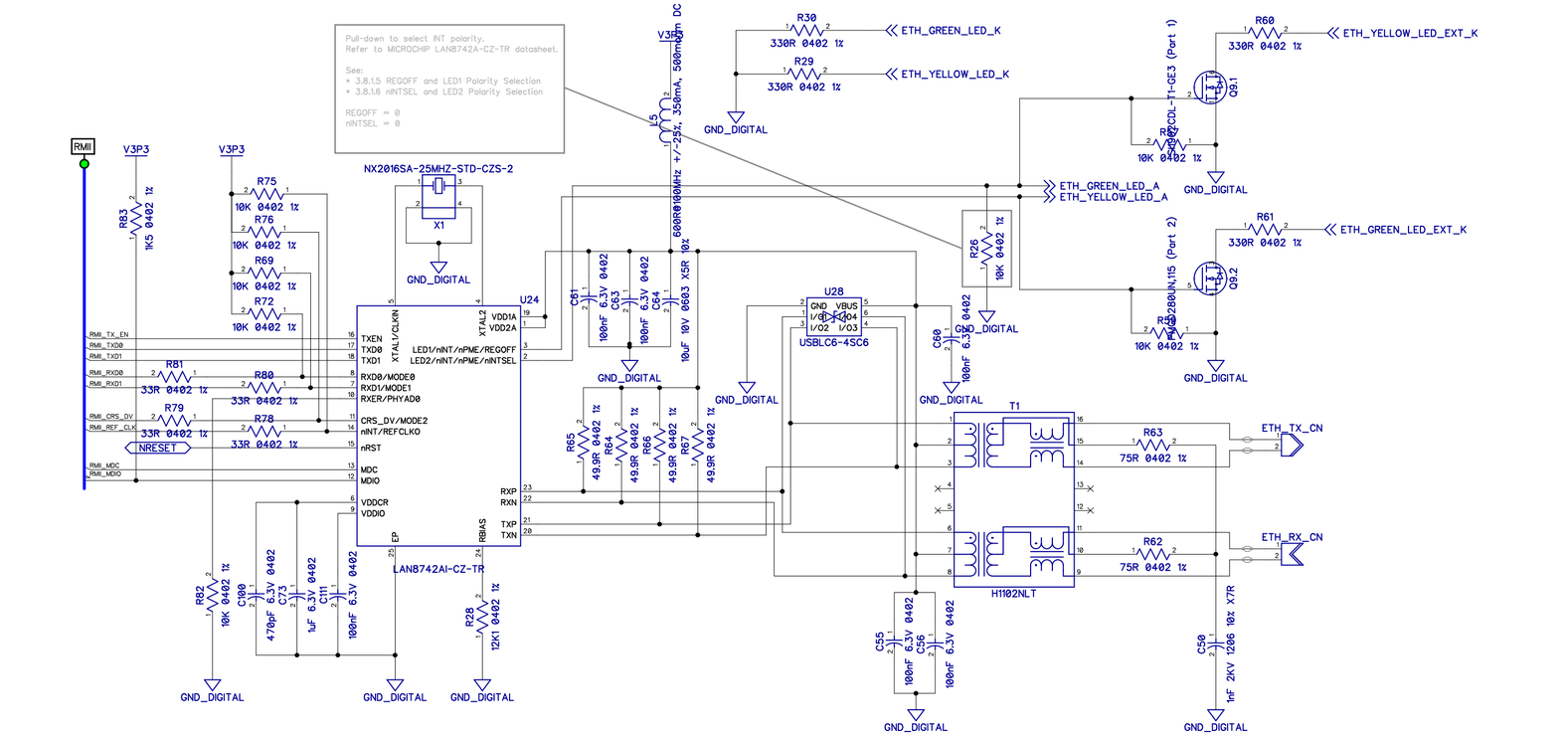

Head comms via RS422

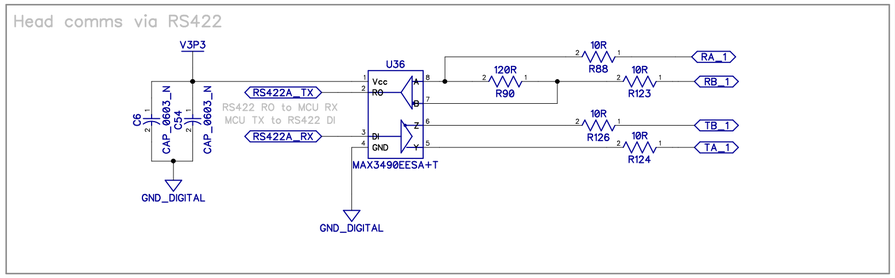

I2C MUX 1 (Ports)

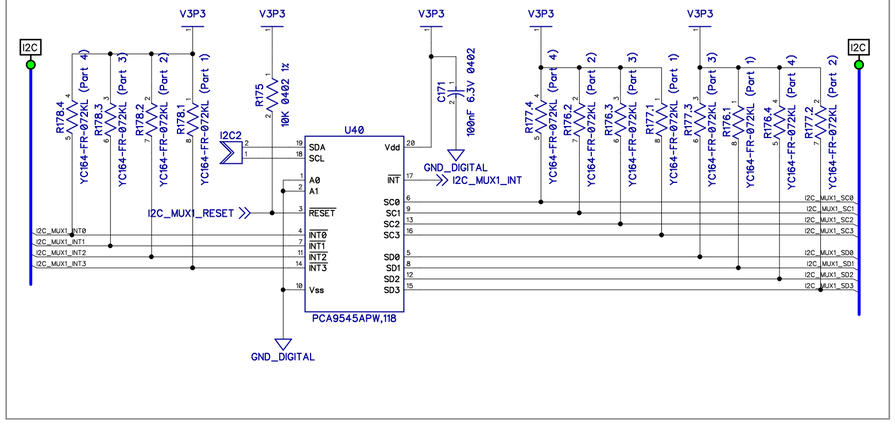

I2C MUX (Sensors)

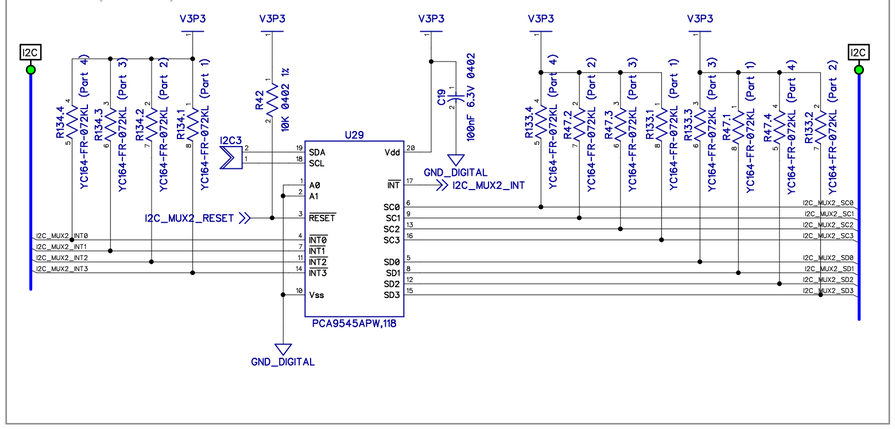

7 Port USB 2 hub.

Up-stream port: A PC or SoC (Raspberry Pi)

Downstream ports:
1-4) Ports 1-4
4-7) H7, FPGA, ESP32

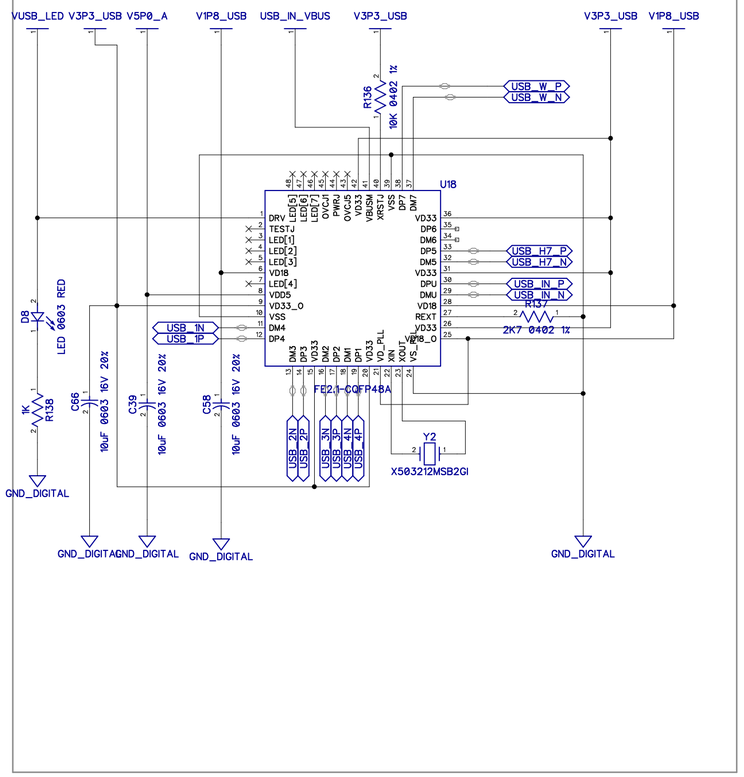

FD-CAN1 8Mbps

+5V CAN voltage. Always on.

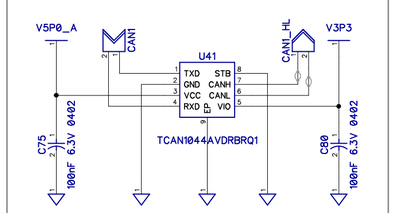

Pin compatible devices, note VIO requirement.

TCAN1044AVDRBRQ1
TCAN1057AVDRBRQ1
MCP2558FDT-H/MF

CAN1 termination

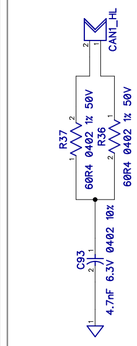

I2C Pull-Ups

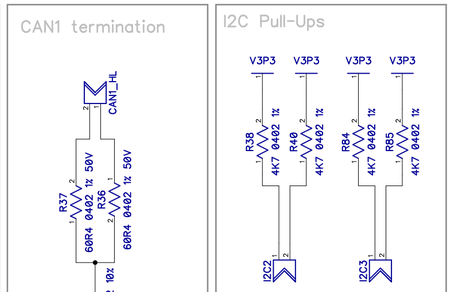

FD-CAN2 8Mbps

+5V CAN voltage. Always on.

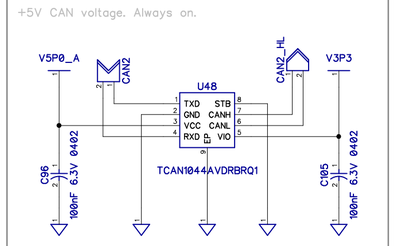

Pin compatible devices, note VIO requirement.

TCAN1044AVDRBRQ1
TCAN1057AVDRBRQ1
MCP2558FDT-H/MF

CAN2 termination

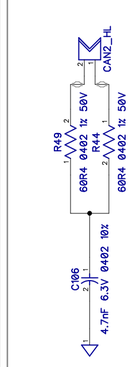

Itemref	Quantity	Title/Name, designation, material, dimension etc		Article No./Reference	
Designed by	Checked by	Approved by - date - 00/00/00	File name	Date 00/00/00	Scale 1:1
Designed by Dominic Clifton				Edition 0	Sheet 1/1

RevNo	Revision note	Date	Signature	Checked

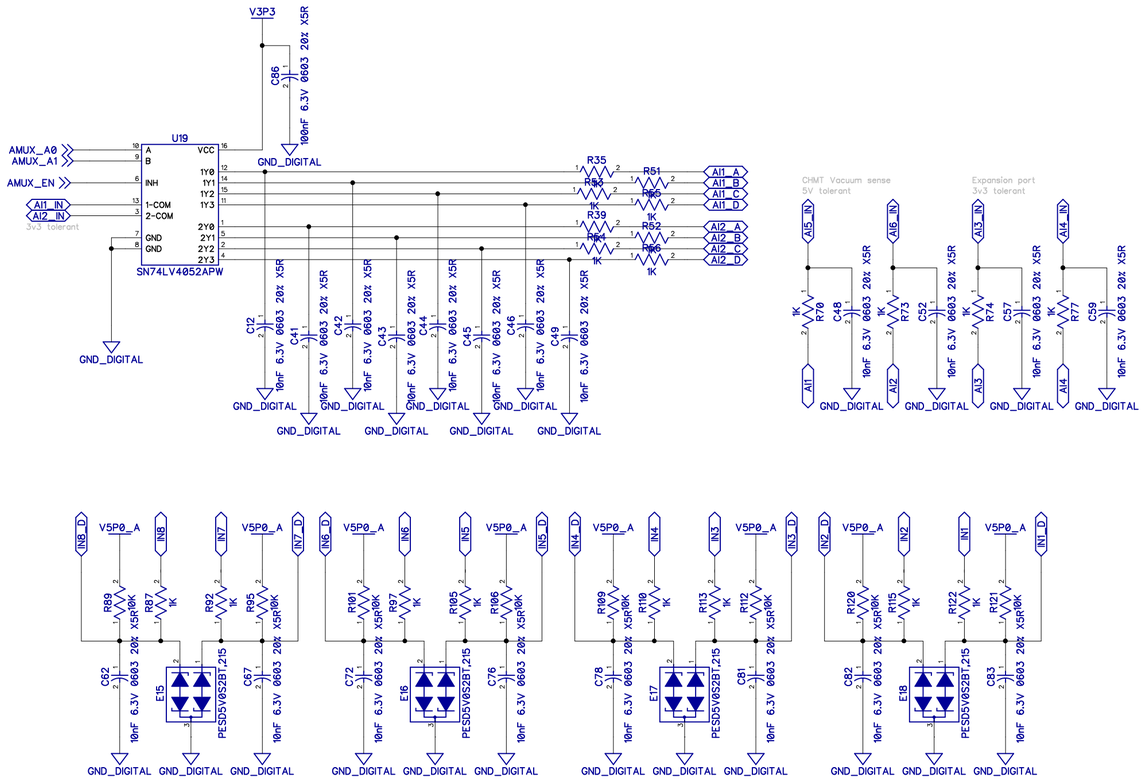

Itemref	Quantity	Title/Name, designation, material, dimension etc		Article No./Reference	
Designed by	Checked by	Approved by - date - 00/00/00	File name	Date 00/00/00	Scale 1:1
Designed by Dominic Clifton				Edition 0	Sheet 1/1

RevNo	Revision note	Date	Signature	Checked

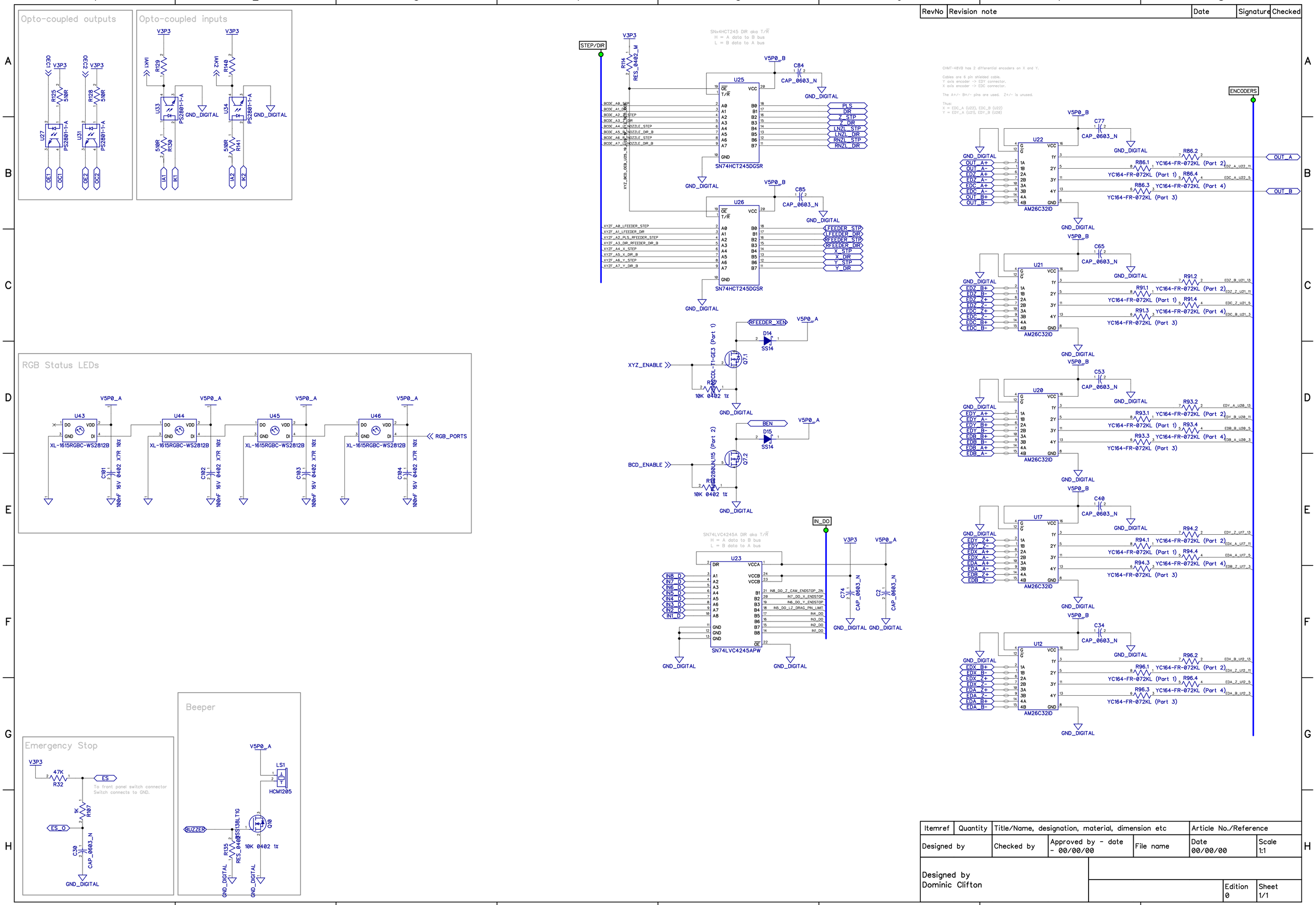

Itemref	Quantity	Title/Name, designation, material, dimension etc		Article No./Reference	
Designed by	Checked by	Approved by - date - 00/00/00	File name	Date 00/00/00	Scale 1:1
Designed by Dominic Clifton				Edition 0	Sheet 1/1

RevNo	Revision note	Date	Signature	Checked

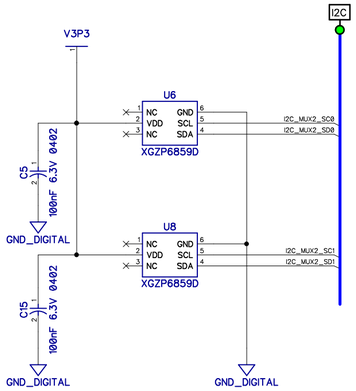

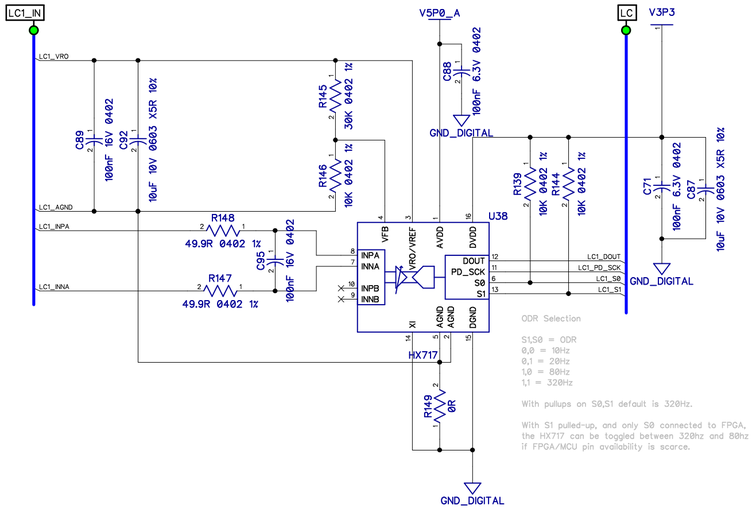

Itemref	Quantity	Title/Name, designation, material, dimension etc		Article No./Reference	
Designed by		Checked by	Approved by - date - 00/00/00	File name	Date 00/00/00	Scale 1:1
Designed by Dominic Clifton					Edition 0	Sheet 1/1