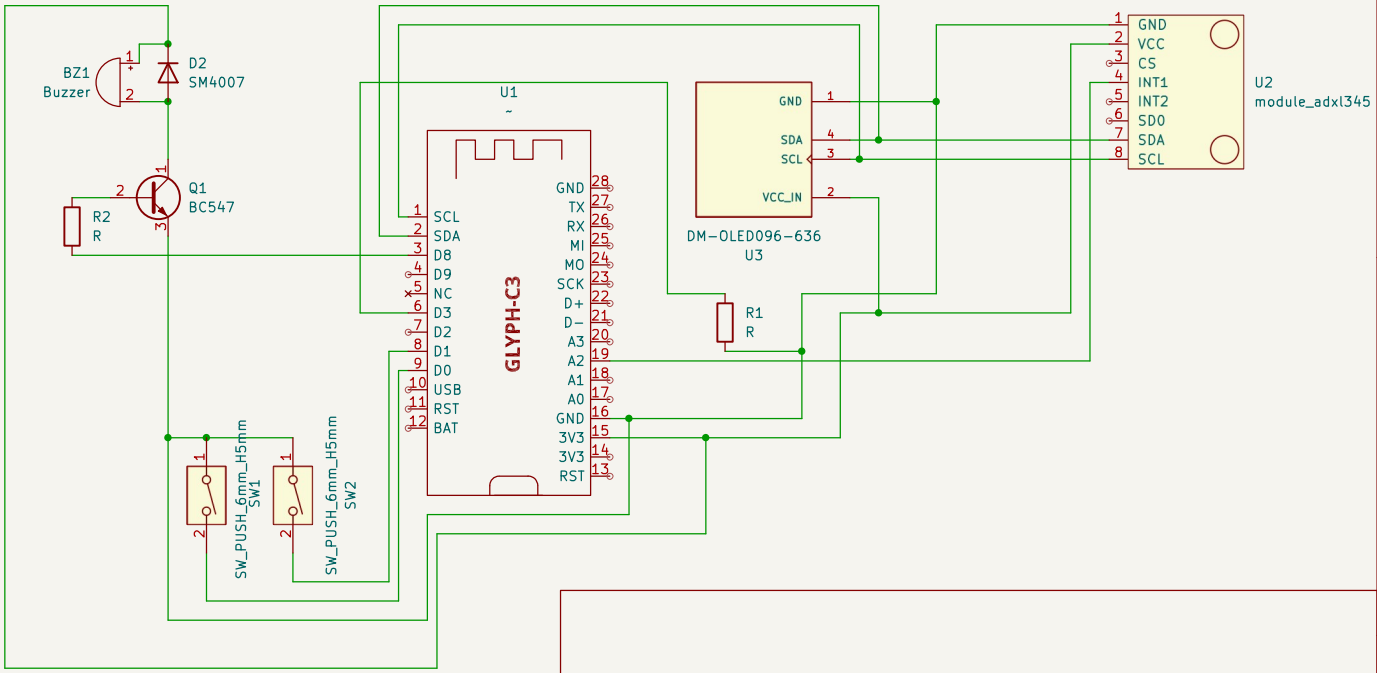

Sheet: /
File: sidekick.kicad_sch

Title: Sidekick PCB

Size: A5	Date: 2025−08−14	**Rev: v0.3.8**
KiCad E.D.A. 9.0.3		Id: 1/1