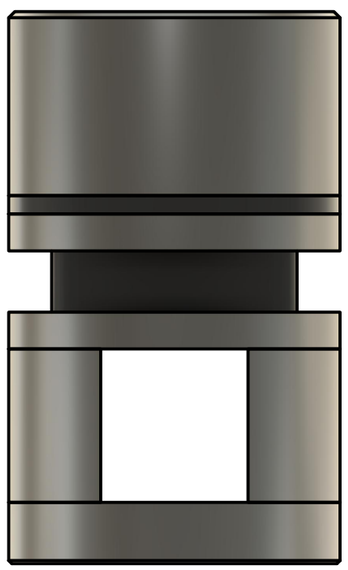

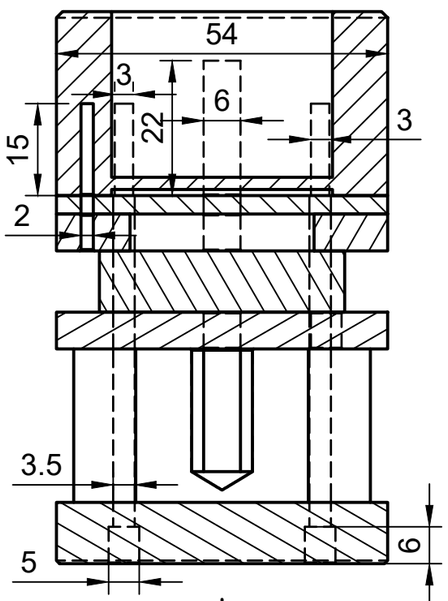

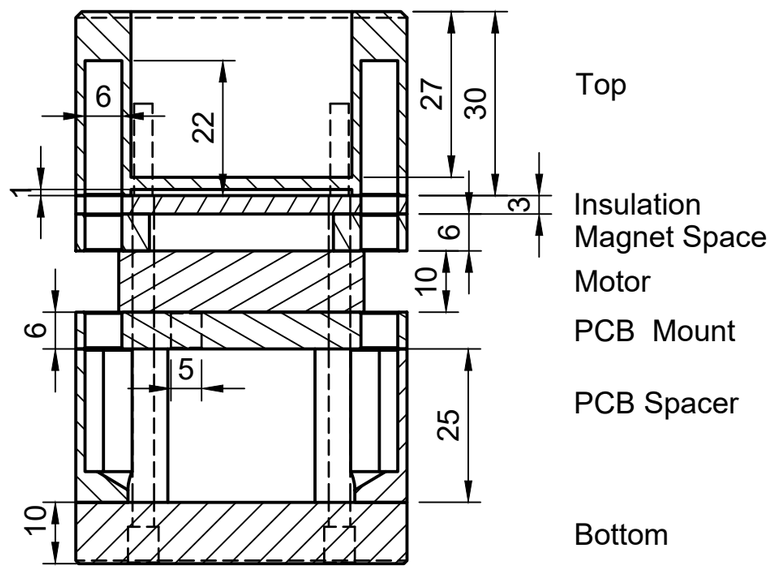

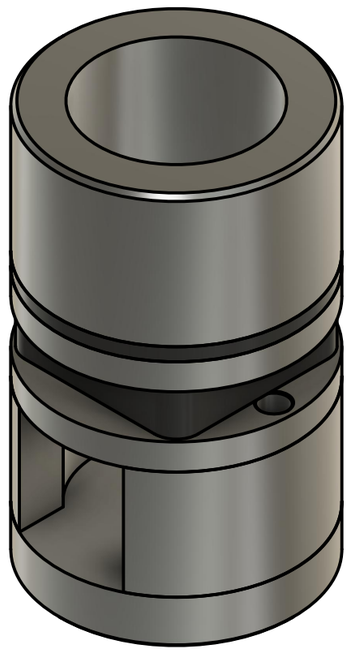

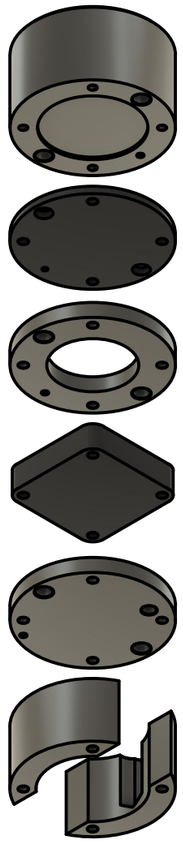

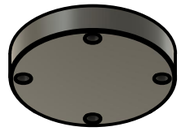

Top

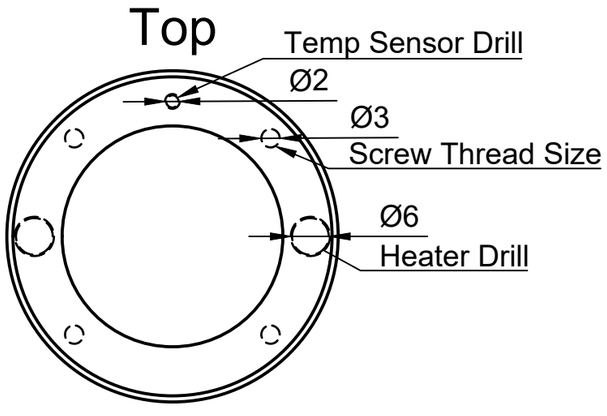

Magnet Space

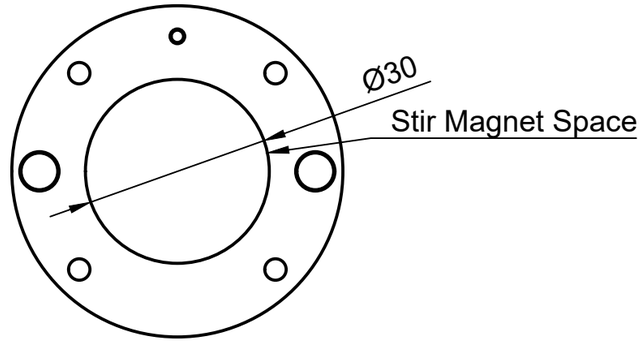

PCB Spacer

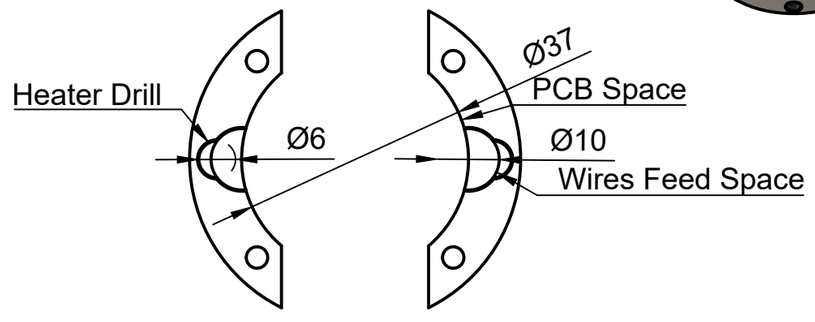

Insulation

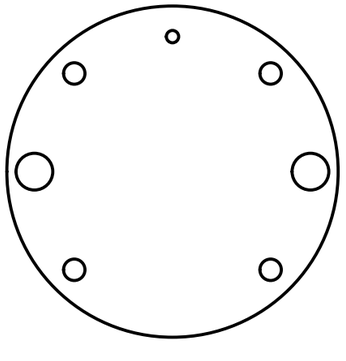

PCB Mount

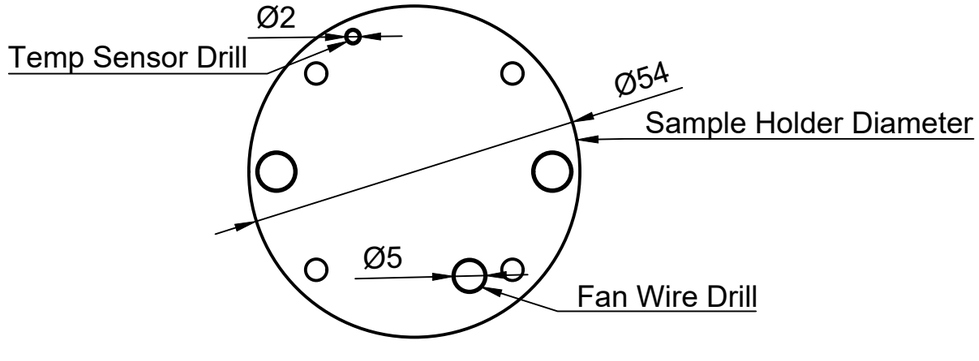
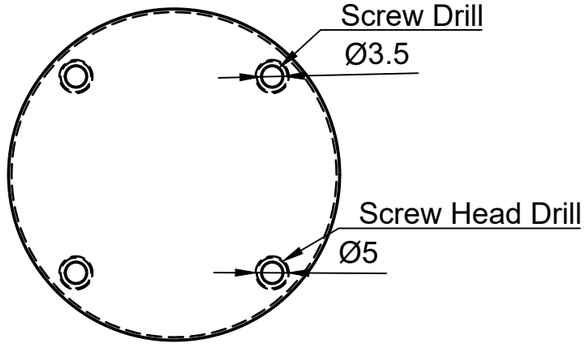
Bottom