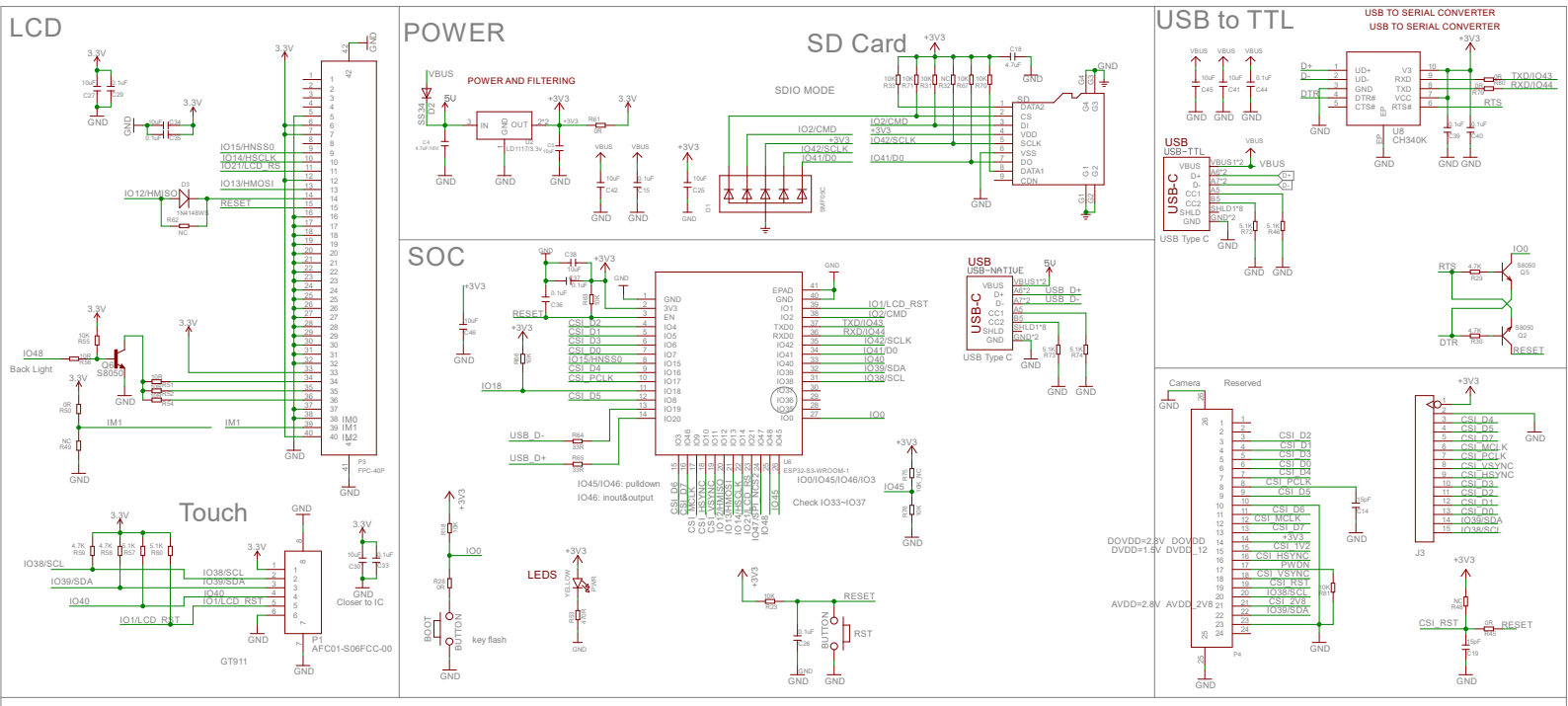

ESP32-S3 SPI TFT with Touch 2.8" ST7789V v1.1

www.makerfabs.com

Design by Charlin