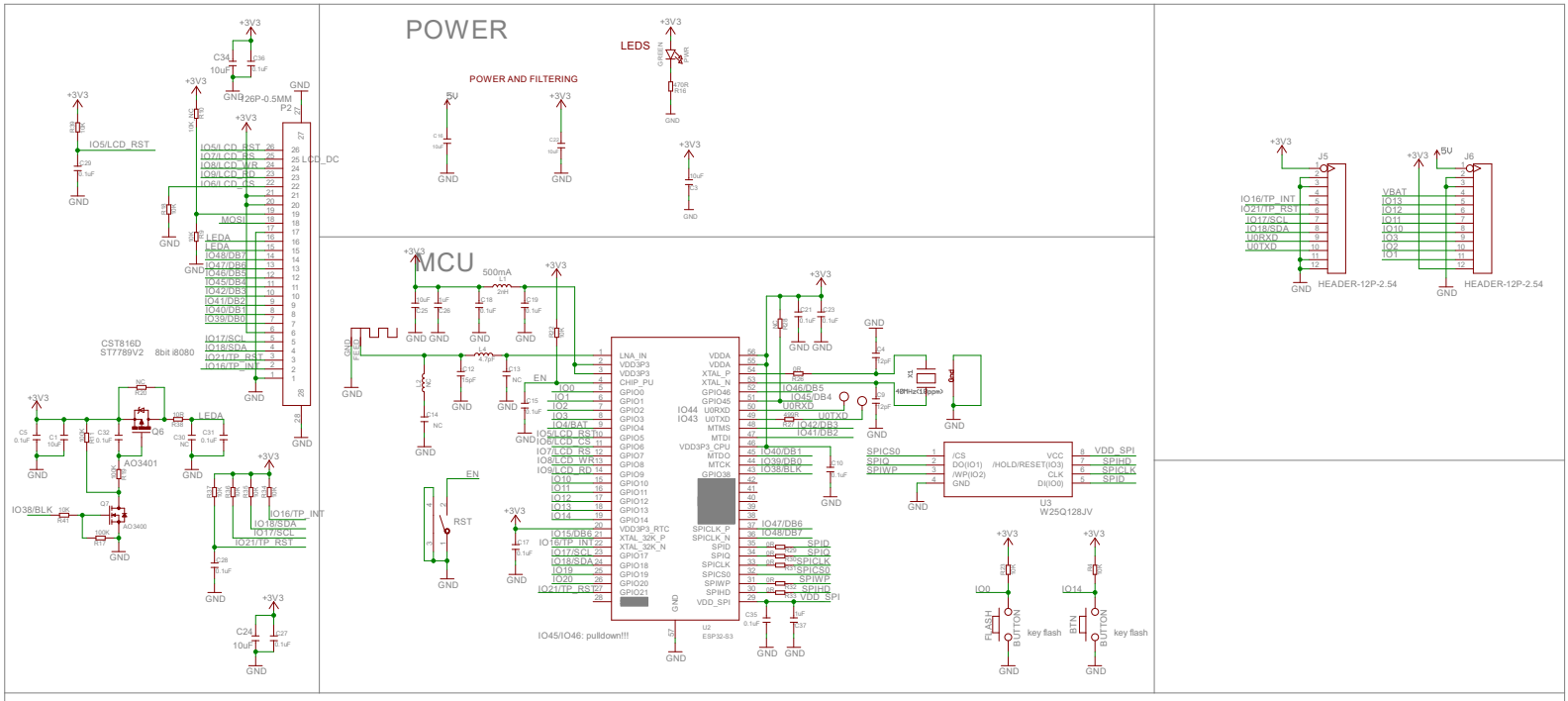
POWER
POWER AND FILTERING
LEDS
MCU
CST816D
ST7789V2
8bit i8080
26P-0.5MM
P2
LCD_DC
MOSI
LEDA
IO5/LCD_RST
IO7/LCD_RS
IO8/LCD_WR
IO9/LCD_RD
IO6/LCD_CS
IO48/DB7
IO46/DB5
IO45/DB4
IO42/DB3
IO41/DB2
IO40/DB1
IO39/DB0
IO17/SCL
IO18/SDA
IO21/TP_RST
IO16/TP_INT
IO38/BLK
AO3401
AO3400
500mA
EN
RST
IO45/IO46: pulldown!!!
ESP32-S3
W25Q128JV
SPICS0
SPIQ
SPIWP
SPIHD
SPICLK
SPID
VDD_SPI
key flash
HEADER-12P-2.54
J5
J6
VBAT
IO13
IO12
IO11
IO10
IO3
IO2
IO1
IO0
IO14
USB
USB Type C
USB_D+
USB_D-
IO20
IO19
VSYS
ME6217
TP4054
MCP73831/2
IC2
J4
1X2P
Q3
AO3401
MOSFET-PCHANNEL
IO4/BAT
MaTouch 1.9" TFT Breakout V1.1
ESP32-S3 Parallel TFT with Touch 1.9" ST7789V2 v2.0
www.makerfabs.com
Design by Charlin