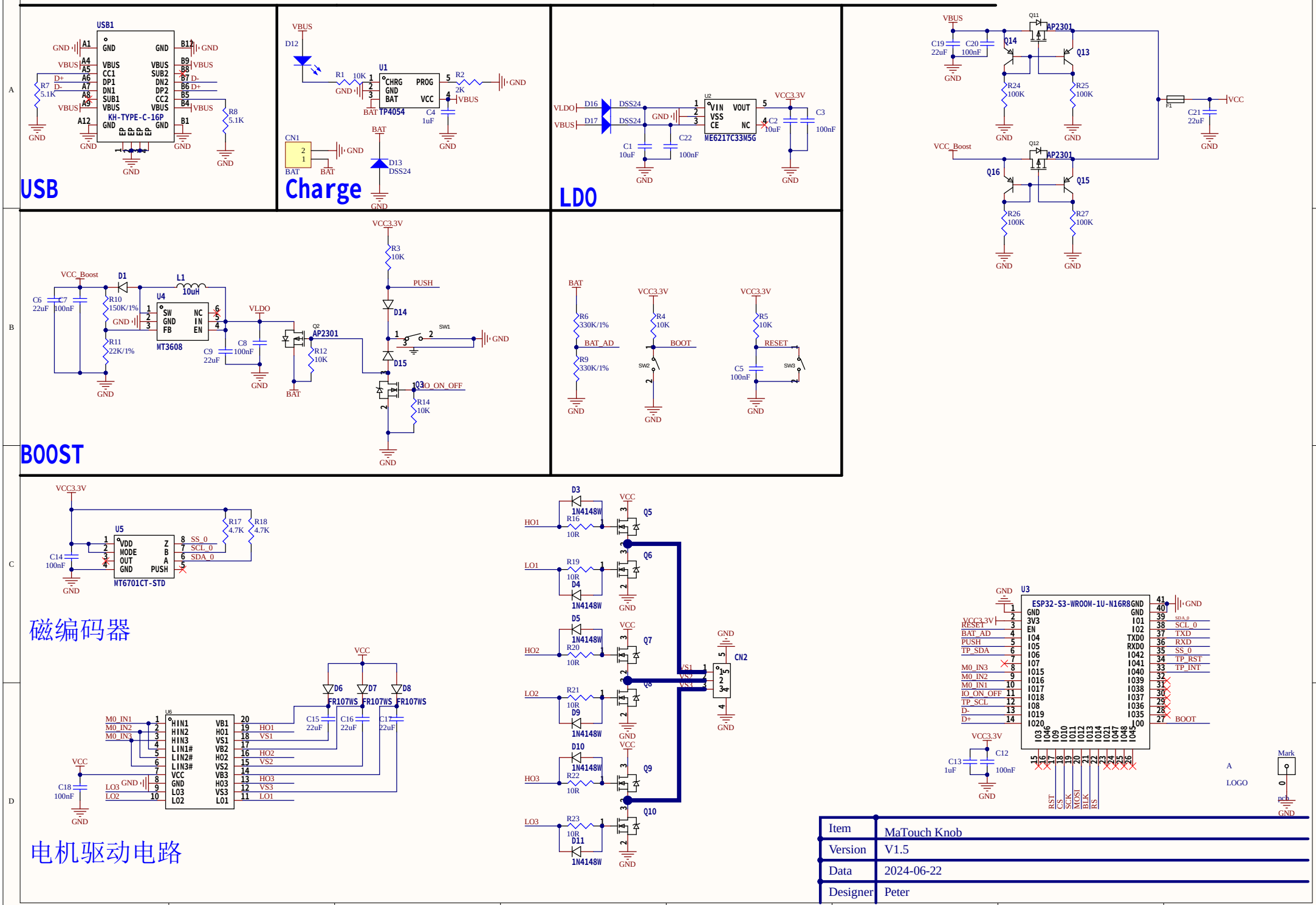

Item	MaTouch Knob
Version	V1.5
Data	2024-06-22
Designer	Peter