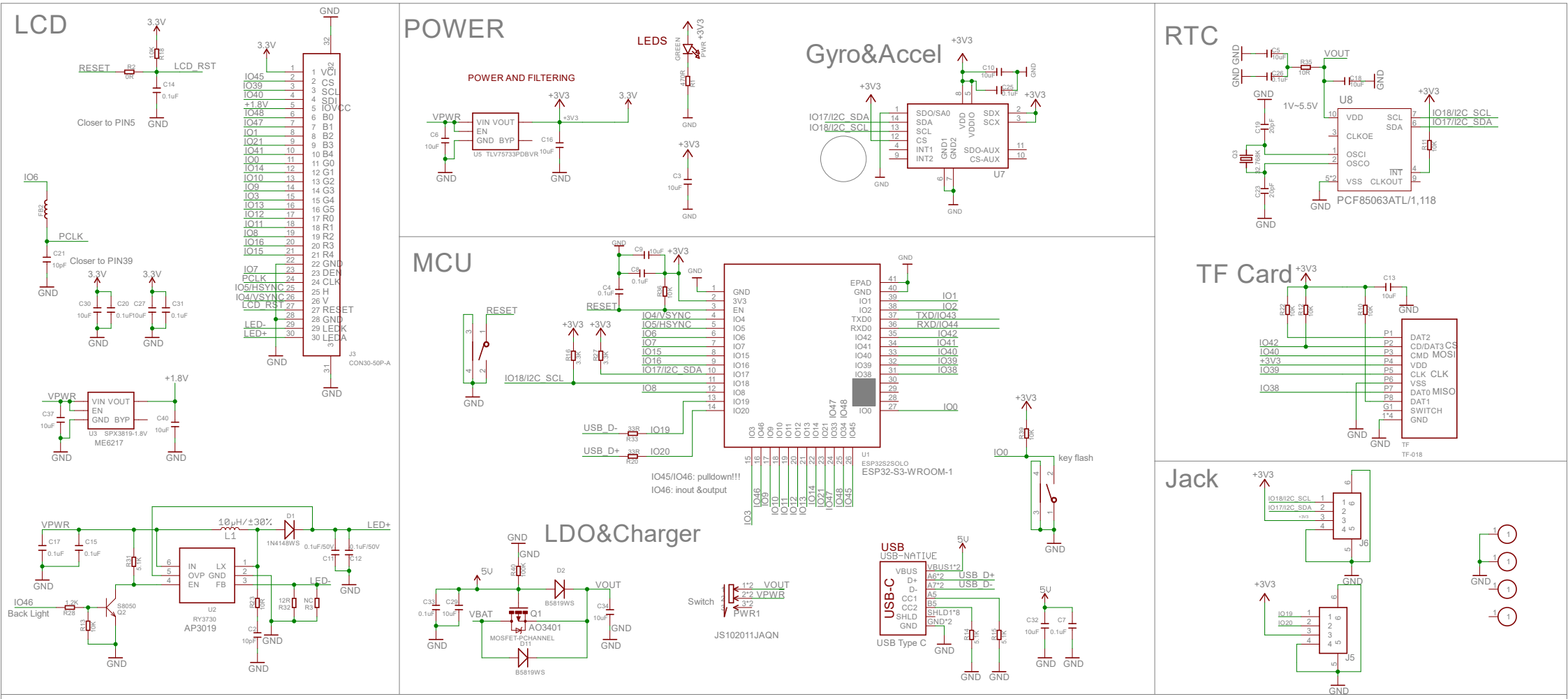

ESP32-S3 Parallel TFT 3.16" ST7701 v1.0

www.makerfabs.com
Design by Charlin