深圳市深南光电有限公司

APPROVAL SHEET
承 认 书

Customer 客户名称	
Part NO. 产品型号	FTD50B7008-D+CTP01
Product type 产品内容	Mode: Transmissive type .NormallyBlack. TFT LCD Module LCD Module: Graphic800RGB*480Dot-matrix
Remarks 备注栏	☐APPROVAL FOR SEPCIFICATIONS ONLY ■APPROVAL FOR SEPCIFICATIONS AND SAMPLE
Signature by Customer: 客户确认签章	

LEAGEND LCM R&D CENTER：

Technical Department: 研发部门	Quality Assurance Department 质量保证部门	Approved by:**核准**
lijian	**LaiYong**	**Kevin**

深圳市福特达电子有限公司
工程部专用章
年 月 日

TEL：0755-23113466/23113566 FAX：0755-23118799
Email: fortda@163.com
Http: www.sz-ftd.com
深圳地址：深圳市宝安区西乡街道西乡奋达科技创新园D栋五楼

深圳市深南光电有限公司

RECORDS OF REVISION

Date	Version	Contents	Note
2017.07.14	A0	First issue	

Contents

1	Introduction----------	4
2	General specification----------	5
3	Mechanical drawing----------	6
4	Absolute maximum ratings----------	7
5	Electrical characteristics----------	7
6	Optical characteristics ----------	7
7	Pin Assignment ----------	11
8	LCM quality criteria----------	12

1. Introduction

1.1 Scope of application

This specification applies to the Negative type TFT transmissive dot matrix LCD module that is supplied by **MCC** This LCD module should be designed for mobile Tablet pc Computer tv use.LCD specification:ALL，Dots 800 xRGBx480.As to basic specification of the driver IC, refer to the IC(TBD) specification and datasheet.

1.2 Structure:

Double display structure:
TFT Module + FPC + BL
FULL Color 5.0 inch TFT LCD size for main LCD;
One bare chip with gold bump (COG) ;
24-bits bus interface;

1.3 TFT features:

Structure: TFT PANNEL+IC+FPC;
Transmissive Type LCD
800 dot-source and 480 dot-gate outputs;
FULL Color;
White LED back light;

1.4 Applications:

Mobile phone,MP5; PC Computer,TV

1.5 This module uses ROHS material

2. General specification

ITEM	Standard value	UNIT
LCD Type	TFT Negative Transmissive	---
Driver element	a-Si TFT Active matrix	
Number of Dots	800 *(RGB)* 480	Dots
Pixel Arrangement	RGB Vertical Stripe	
Pixel Pitch (W*H)	0.0502(W)x0.1432(H)	
Display Area	108 (H) x 64.8 (V)	mm
Viewing Direction	ALLO'clock	
Driver IC	TBD	
Module Size(W*H*T)	120.7 x75.8* 3.0	mm
Approx. Weight	TBD	g
Back Light	White LED	

3. Mechanicaldrawing

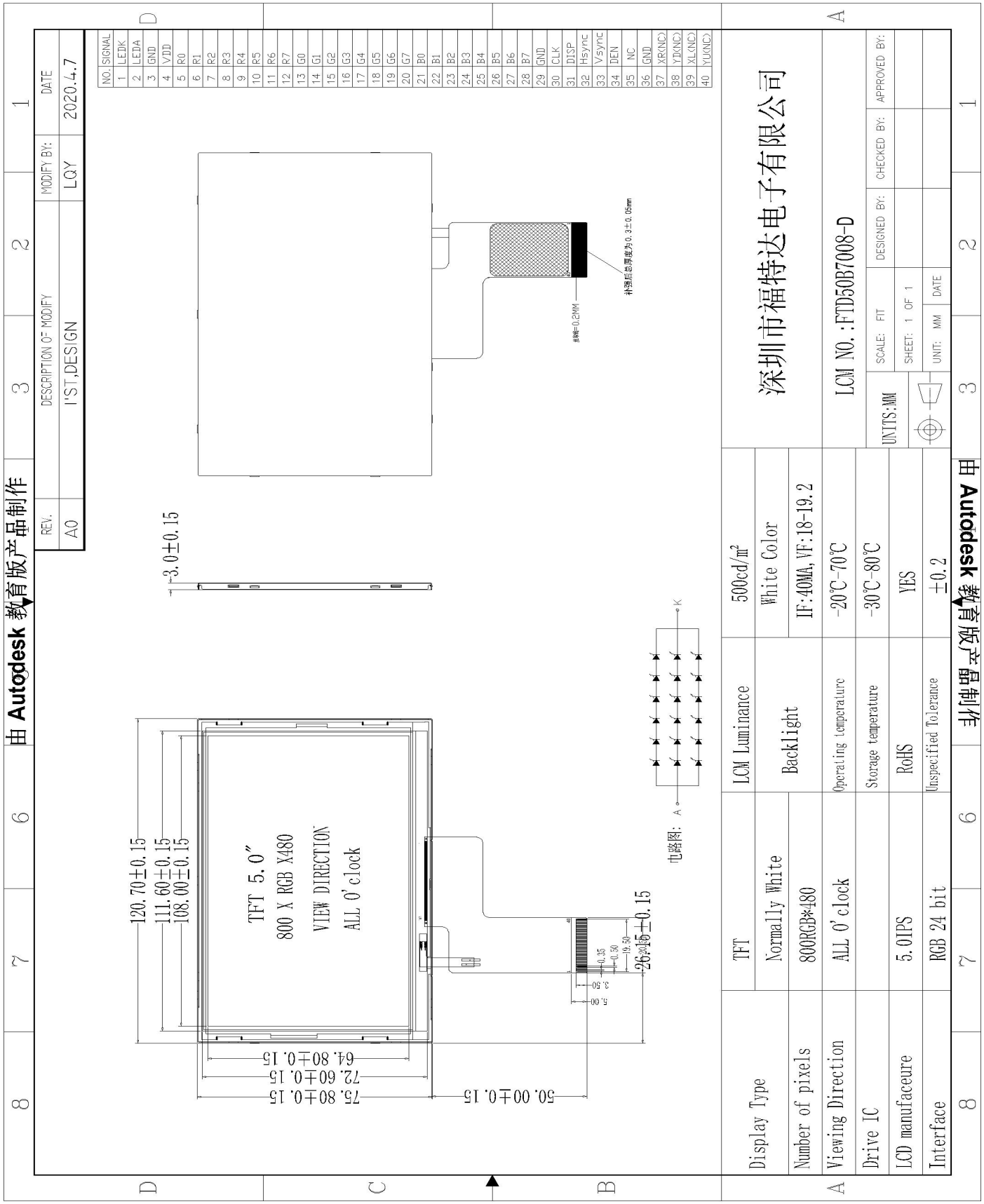

硬件规格:			
触摸点数	5点	TFT分辨率	800*480
IIC通讯电压	2.8V	VDD供电电压	3.3V
IIC通信地址	0X70	坐标原点	右下
FPC是否需要贴上拉电阻		不需要	

REV.	DESCRIPTION OF MODIFY	MODIFY BY:	DATE
A0	I'ST,DESIGN	LQY	2020.4.7

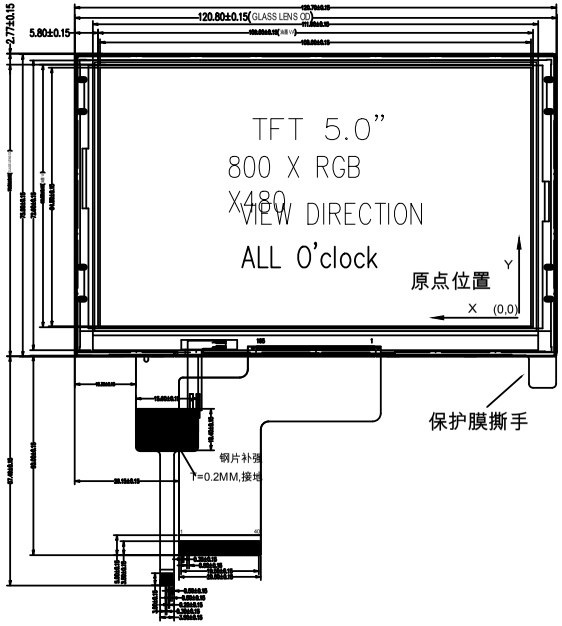

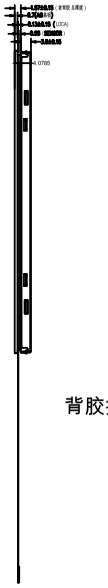

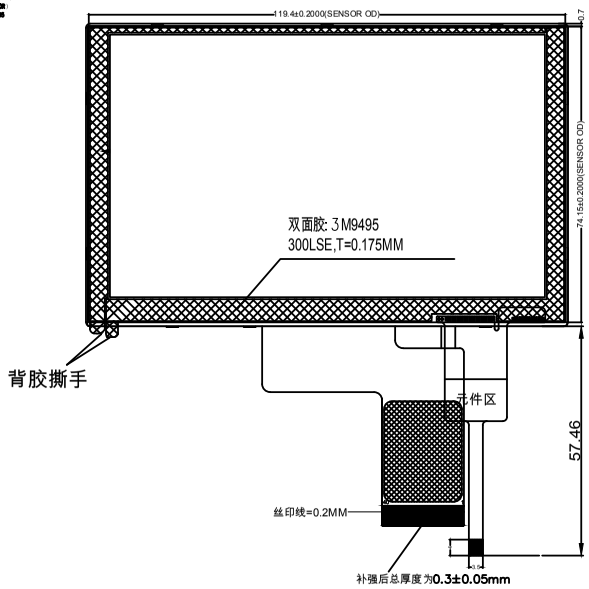

NO.	SIGNAL
1	LEDK
2	LEDA
3	GND
4	VDD
5	R0
6	R1
7	R2
8	R3
9	R4
10	R5
11	R6
12	R7
13	G0
14	G1
15	G2
16	G3
17	G4
18	G5
19	G6
20	G7
21	B0
22	B1
23	B2
24	B3
25	B4
26	B5
27	B6
28	B7
29	GND
30	CLK
31	DISP
32	Hsync
33	Vsync
34	DEN
35	NC
36	GND
37	XR(NC)
38	YD(NC)
39	XL(NC)
40	YU(NC)

Note:

1.结构：G+G: 0.70 GLASS LENS+0.15LOCA+0.70 GLASS SENSOR
2.Cover Lens 材质：AG GLASS,表面硬度≥6 H；
3.未注公差±0.15mm;
4.IC: GT911 TX17*RX10;
5.工作温度：-20-60°;
6.存储温度：-30-70°;
7.带△符号为重点管控尺寸；
8.所有材料及工艺须符合Rohs。

电路图: A K

分辨率800*480

1	VCC
2	RST
3	SCL
4	SDA
5	INT
6	GND

Display Type	TFT	LCM Luminance	500cd/m²
	Normally White	Backlight	White Color
Number of pixels	800RGB*480		IF: 40MA,VF: 18-19.2
Viewing Direction	ALL O'clock	Operating temperature	-20℃-70℃
Drive IC		Storage temperature	-30℃-80℃
LCD manufaceure	5.0IPS	RoHS	YES
Interface	RGB 24 bit	Unspecified Tolerance	±0.2

深圳市深南光电有限公司

LCM NO.: FTD50B7008-D+CTP01

UNITS: MM	SCALE: FIT		DESIGNED BY:	CHECKED BY:	APPROVED BY:
	SHEET: 1 OF 1				
	UNIT: MM	DATE			

4. ABSOLUTE MAXIMUM RATINGS

Parameter	Symbol	Min	Max	Unit
Supply voltage for logic	V_{DD}	-0.3	3.0	V
Input voltage for logic	V_{IN}	-0.5	V_{DD} +0.3	V
Supply current (One LED)	I_{LED}	18	25	mA
Operating temperature	T_{OP}	-20	+70	°C
Storage temperature	T_{ST}	-30	+80	°C

5. ELECTRICAL CHARACTERISTICS

Item	Symbol	Min	Typ	Max	Unit	Applicable terminal
Supply voltage for logic	V_{DD}	2.8	3.3	3.5	V	V_{DD}
Input voltage	V_{IL}	-0.3	-	0.2 V_{DD}	V	
	V_{IH}	0.8 V_{DD}	-	V_{DD}	V	
Input leakage current	I_{LKG}				μA	
AVDD current		8	9.8	12	V	
VGH current		17	17.5	18	V	
VGL current		-5.5	-6	-6.5	V	
VCOM current		3.6	4	4.5	V	
LED backlight voltage	V_f	17.5	18	19.2	V	--
Input backlight current	I_{LED}	55	60	70	mA	With One LED
backlight LEDquantity	LED	6series 3parallel				18LED

6. OPTICAL CHARACTERISTICS

ITEM		SYMBOL	CONDITIONS	SPECIFICATIONS			UNIT	NOTE
				MIN.	TYP.	MAX		
Brightness		B	Viewing normal angle	500	600	--	Cd/m^2	All left side data are based on LEAD's product reference only
Contrast Ratio		CR		--	1200	--	--	
Response Time		Tr+Tf		--	30	-	ms	
CIE Color coordinate	Red	X_R		--	0.571			
		Y_R			0.352			
	Green	X_G		--	0.345			
		Y_G			0.557			
	Blue	X_B		--	0.148			
		Y_B			0.128			
	White	X_W		--	0.314			
		Y_W			0.334			
Viewing Angle	Hor.	θ_{X+}	Center CR>=10		80	--	Deg.	
		θ_{X-}			80	--		
	Ver.	θ_{Y+}			80	--		
		θ_{Y-}			80			
Uniformity	Un			80	85		%	

Horizontal timing

Parameter	Symbol	Spec.			Unit
		Min.	Typ.	Max.	
Horizontal Display Area	thd		800		DCLK
DCLK frequency	fclk	-	30	50	MHz
One Horizontal Line	th	889	928	1143	DCLK
HS pulse width	thpw	1	48	255	DCLK
HS Back Porch (Blanking)	thb		88		DCLK
HS Front Porch	thfp	1	40	255	DCLK
DE mode Blanking	th-thd	85	128	512	DCLK

Vertical timing

Parameter	Symbol	Spec.			Unit
		Min.	Typ.	Max.	
Vertical Display Area	tvd		480		T_H
VS period time	tv	513	525	767	T_H
VS pulse width	tvpw	3	3	255	T_H
VS Back Porch (Blanking)	tvb		32		T_H
VS Front Porch	tvfp	1	13	255	T_H
DE mode Blanking	tv-tvd	4	45	255	T_H

Note 1 : Definition of Viewing Angle θ_x and θ_y :

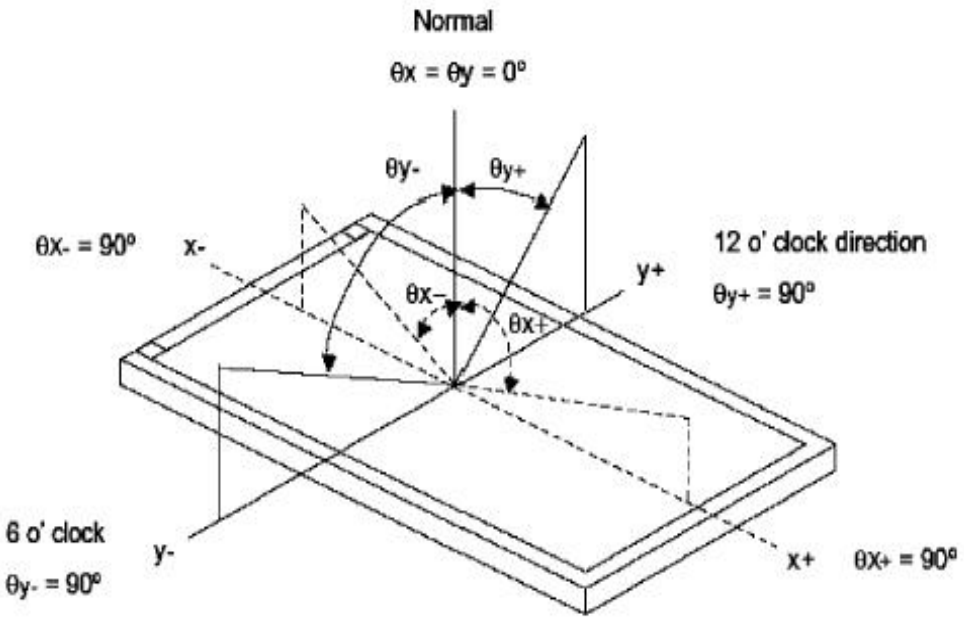

: The brightness test equipment setup

20mA Field=2° (As measuring "black" image, field=2° is the best testing condition)

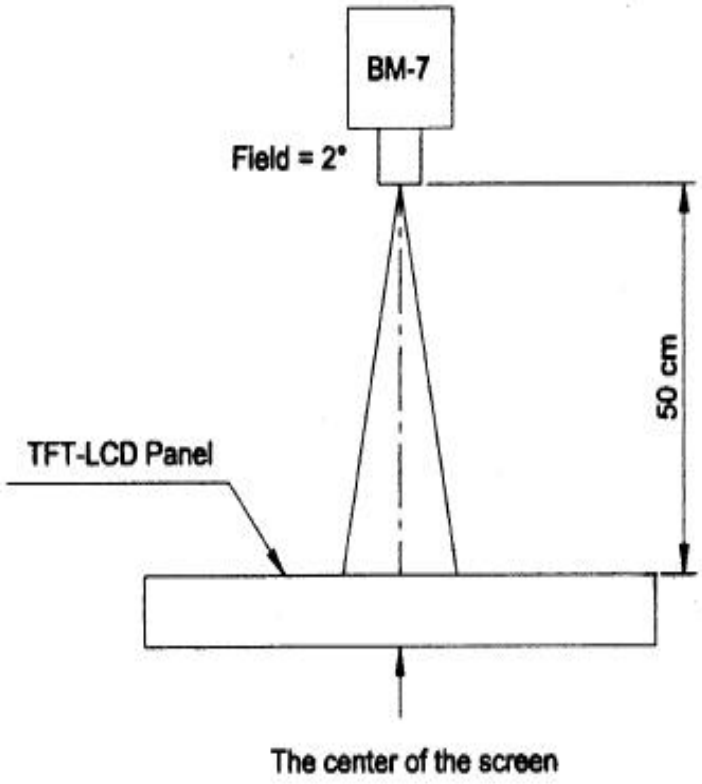

Note 4 :

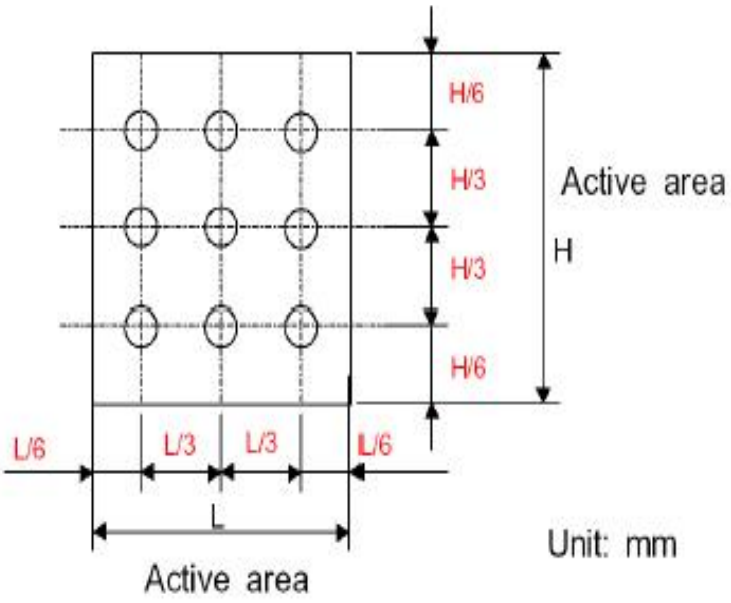

7. Interface Pin Function

Pin.No	Symbol	Function
1	LEDK	back light power supply negative
2	LEDA	back light power supply positive
3	GND	Ground
4	VCC	Power supply
5-12	-R7	Data
13-20	G0 -G7	Data
21-28	B0 - B7	Data
29	GND	Ground
30	CLK	Colock signal
31	DISP	Display on/off
32	HSYNC	Horizontal sync input in RGB mode(short to GND if not used)
33	VSYNC	Vertical sync input in RGB mode(short to GND if not used)
34	DE	Synchronization can make
35	NC/SHLR	Left or Right Display Control
36	NC/UPDN	Up / Down Display Control
37	XR	touch panel X-right
38	YD	touch panel Y-bottom
39	XL	touch panel X-left
40	YU	touch panel Y-upl

LCM quality criteria-

8.1 RELIABILITY TEST

NO	ITEM	CONDITION	STANDARD
1	High temp. Storage	80℃, 48hrs	No function failure detected.
2	Low temp. Storage	-30℃, 48hrs	No function failure detected.
3	High temp. & High humidity operation	60℃, 90%, 48hrs	No function failure detected.
4	High temp. Operation	70℃, 48hrs	No function failure detected.
5	Low temp. Operation	-20℃, 48hrs	No function failure detected.
6	Thermal shock	-20℃, 30min~70℃, 30min, 10 cycles.	No function failure detected.

The reliability items will be fully performed in new sample qualification.

The reliability status will be tested as monitor during mass production. The individual reliability test shall be managed by lot. Moreover, the individual reliability item shall be decided according reliability plan.