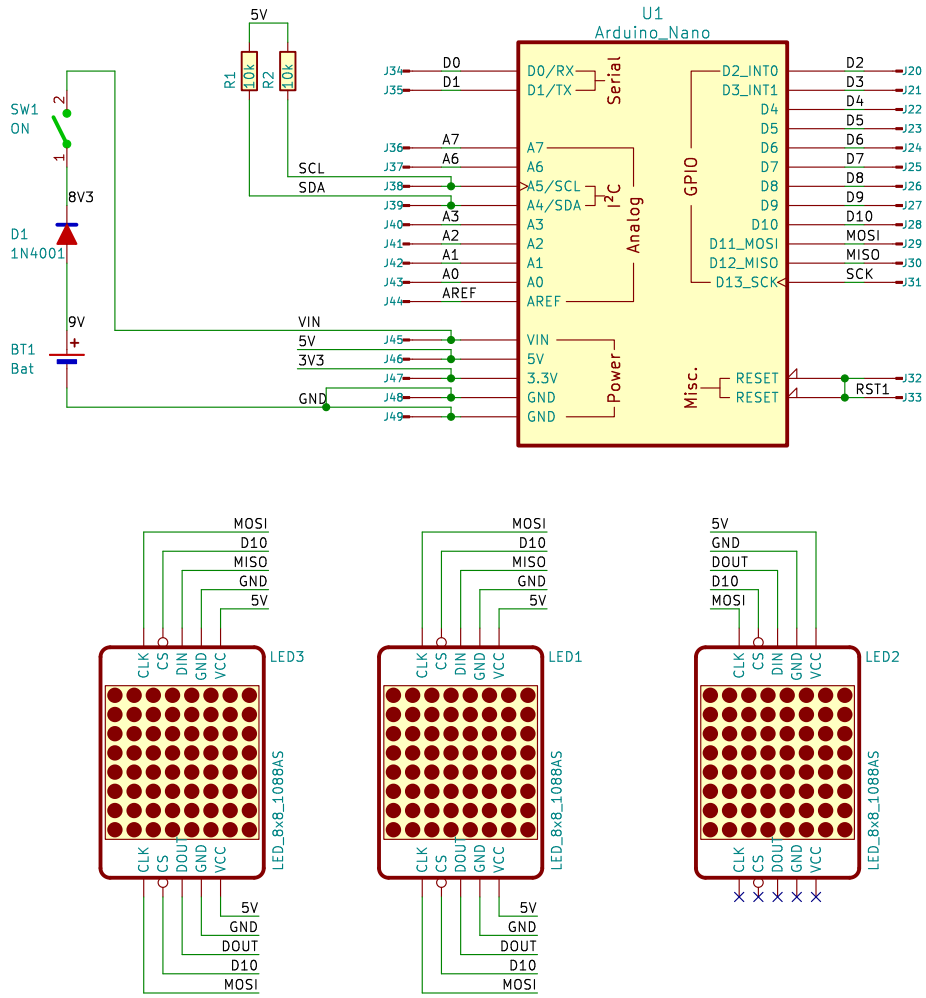

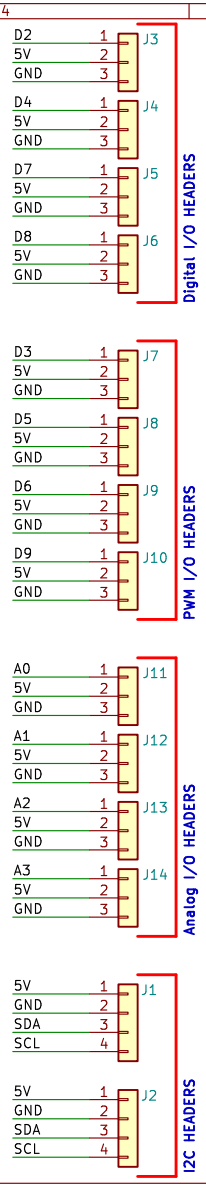

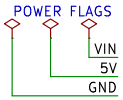

NOTES:
1. For single 8x8 matrix, use LED1
2. For dual 8x8 matrix, use LED3 (left) and LED2 (right)
3. Extra I²C modules such as accel or RTC can be populated in the I²C slots
4. Three expansion headers for Digital, PWM and Analog. Each with four I/O's, +5V and GND

MAKER'S™ ASYLUM

Maker's Asylum

Sheet: /
File: TheThing.kicad_sch

Title: TheThing

Size: A4	Date: 2024-09-02	**Rev: v5**
KiCad E.D.A. 8.0.3		Id: 1/1