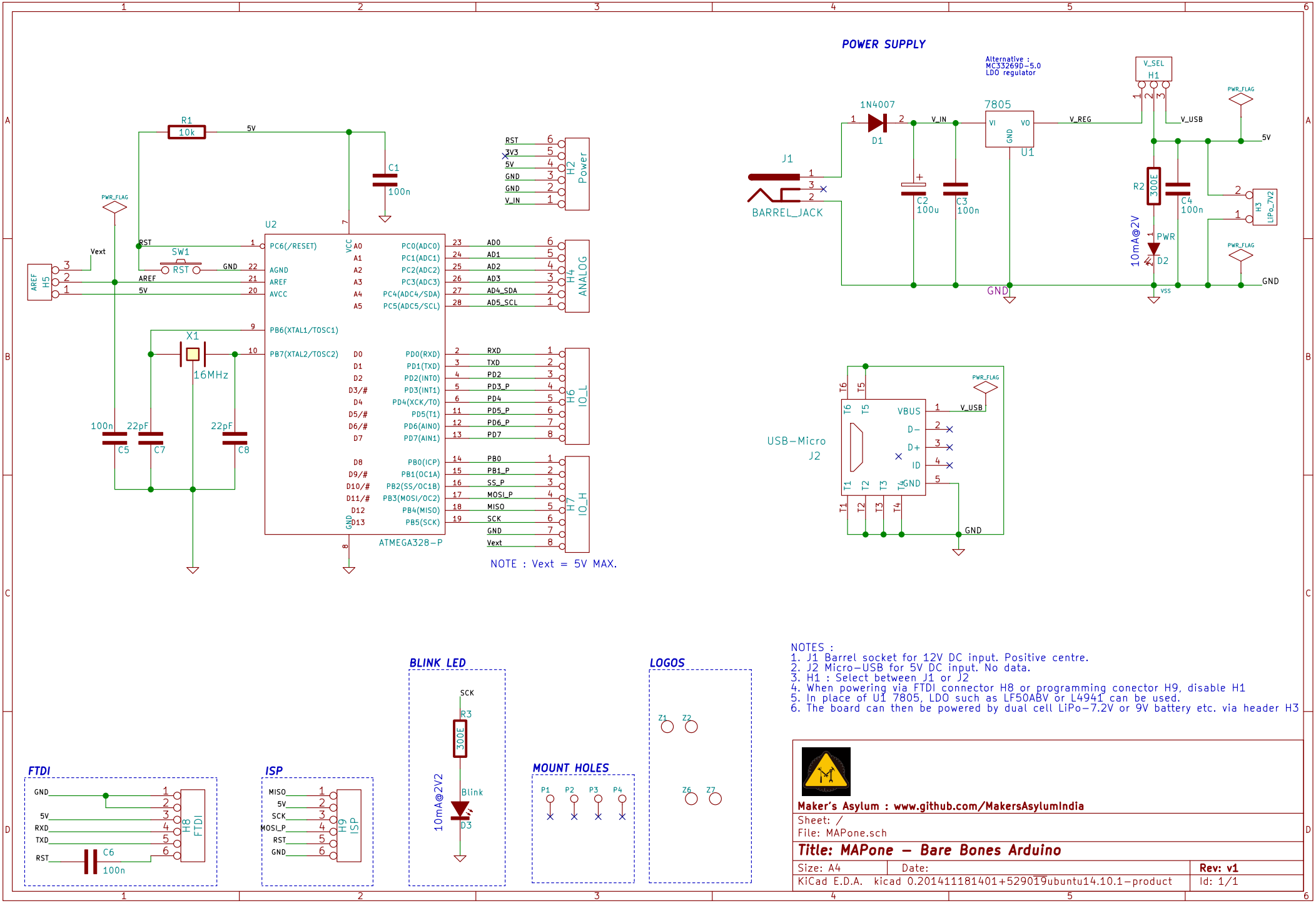
POWER SUPPLY
Alternative : MC33269D-5.0 LDO regulator
1N4007
D1
7805
U1
VI
VO
GND
V_IN
V_REG
V_SEL
H1
V_USB
PWR_FLAG
5V
J1
BARREL_JACK
C2 100u
C3 100n
R2 300E
C4 100n
10mA@2V
PWR
D2
VSS
H3 LiPo_7V2
GND
R1 10k
C1 100n
U2
ATMEGA328-P
PC6(/RESET)
AGND
AREF
AVCC
PB6(XTAL1/TOSC1)
PB7(XTAL2/TOSC2)
PC0(ADC0)
PC1(ADC1)
PC2(ADC2)
PC3(ADC3)
PC4(ADC4/SDA)
PC5(ADC5/SCL)
PD0(RXD)
PD1(TXD)
PD2(INT0)
PD3(INT1)
PD4(XCK/T0)
PD5(T1)
PD6(AIN0)
PD7(AIN1)
PB0(ICP)
PB1(OC1A)
PB2(SS/OC1B)
PB3(MOSI/OC2)
PB4(MISO)
PB5(SCK)
SW1
RST
X1
16MHz
100n C5
22pF C7
22pF C8
AREF H5
Vext
H2 Power
H4 ANALOG
H6 IO_L
H7 IO_H
AD0
AD1
AD2
AD3
AD4_SDA
AD5_SCL
RXD
TXD
PD2
PD3_P
PD4
PD5_P
PD6_P
PD7
PB0
PB1_P
SS_P
MOSI_P
MISO
SCK
NOTE : Vext = 5V MAX.
USB-Micro J2
VBUS
D-
D+
ID
GND
V_USB
FTDI
H8 FTDI
C6 100n
ISP
H9 ISP
BLINK LED
R3 300E
Blink
D3
10mA@2V2
MOUNT HOLES
P1
P2
P3
P4
LOGOS
Z1
Z2
Z6
Z7
NOTES :
1. J1 Barrel socket for 12V DC input. Positive centre.
2. J2 Micro-USB for 5V DC input. No data.
3. H1 : Select between J1 or J2
4. When powering via FTDI connector H8 or programming conector H9, disable H1
5. In place of U1 7805, LDO such as LF50ABV or L4941 can be used.
6. The board can then be powered by dual cell LiPo-7.2V or 9V battery etc. via header H3
Maker's Asylum : www.github.com/MakersAsylumIndia
Sheet: /
File: MAPone.sch
Title: MAPone - Bare Bones Arduino
Size: A4
Date:
Rev: v1
KiCad E.D.A. kicad 0.201411181401+529019ubuntu14.10.1-product
Id: 1/1