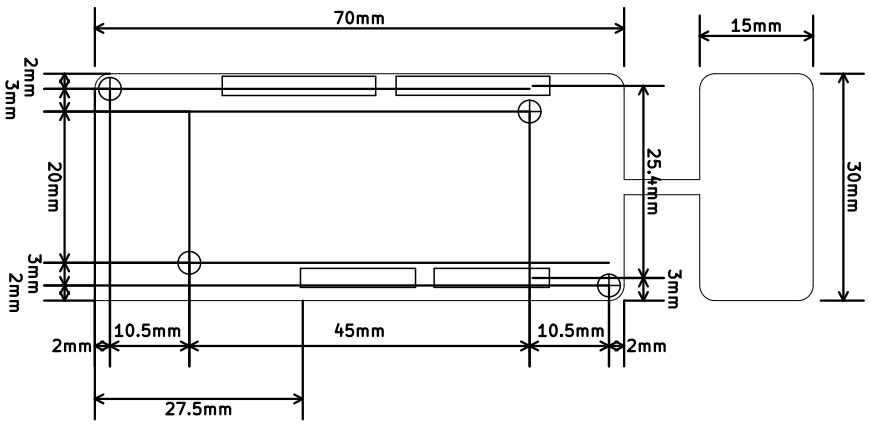

NOTES :
1. Arduino headers are arranged in same sequence as Duemilenova
2. Gap between headers is 25.4mm (1.0") against 48.26mm (1.9") on Duemilenova.
3. Four mounting holes, drilled to 3.125mm.
4. All SMD parts are on bottom layer.
5. For U2, ATMega-328P, use either regular DIP socket, or ZIF socket.

Maker's Asylum : www.github.com/MakersAsylumIndia

Sheet:
File: MAPone.kicad_pcb

Title: MAPone - Bare Bones Arduino

Size: A4	Date:	**Rev: v1**
KiCad E.D.A. kicad (2014-11-14 BZR 5284)-product		Id: 1/1