PIN HEADER BREAKOUT

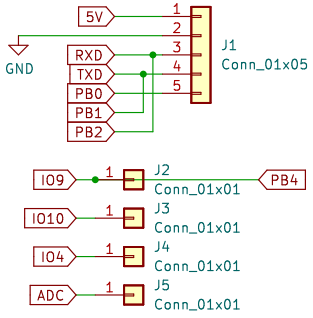

PB** PINS ARE FOR ATTINY,
IO** PINS ARE FOR ESP 12e MODULE
SOLDER ONLY ESP OR ATTINY

RESET, PROGRAMMING & USER SWITCH

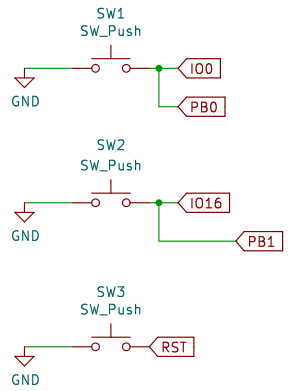

POPULATE 0Ω RESISTOR ONLY FOR ATTINY13A

ATTINY 13A-S

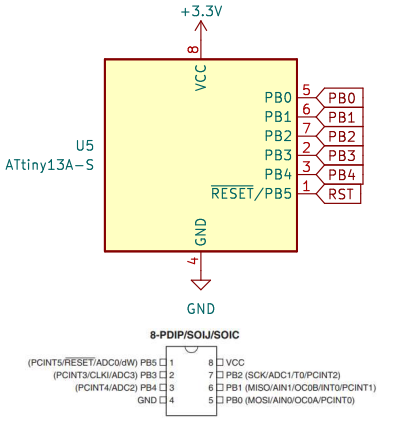

LCD & DRIVER

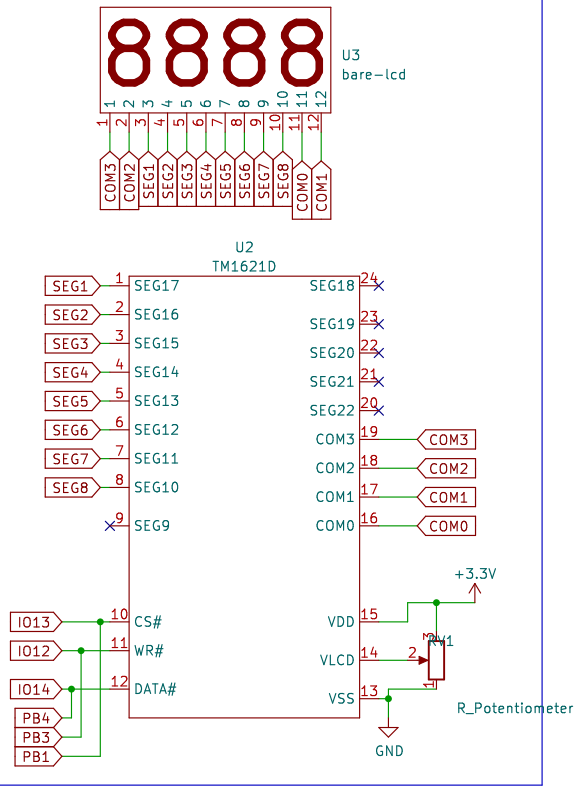

ESP12E/ESP8266 MODULE

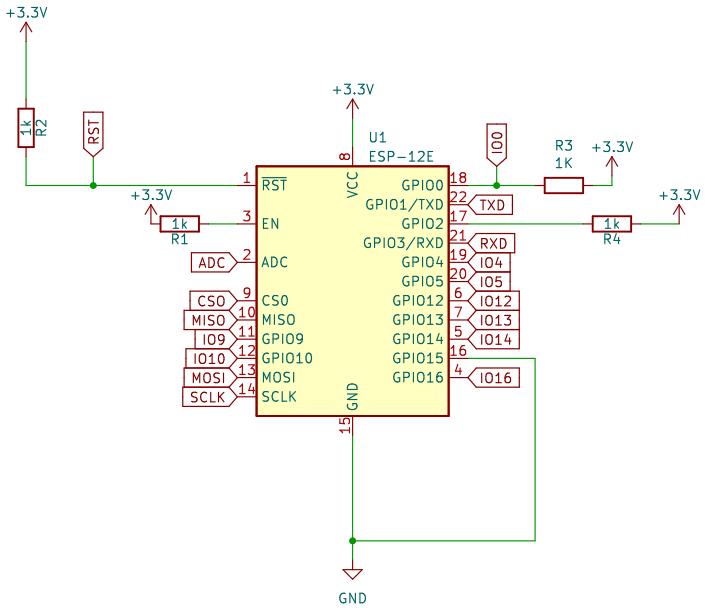

VOLTAGE REGULATOR

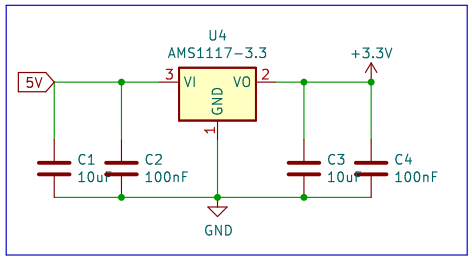

BUZZER

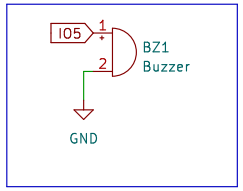

Mode	GPIO15	GPIO0	GPIO2
UART	Low	Low	High
Flash Boot	Low	High	High