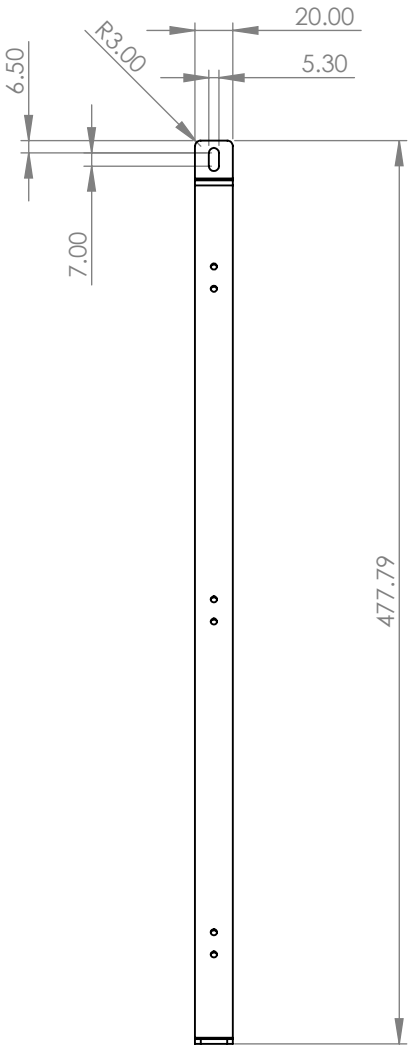

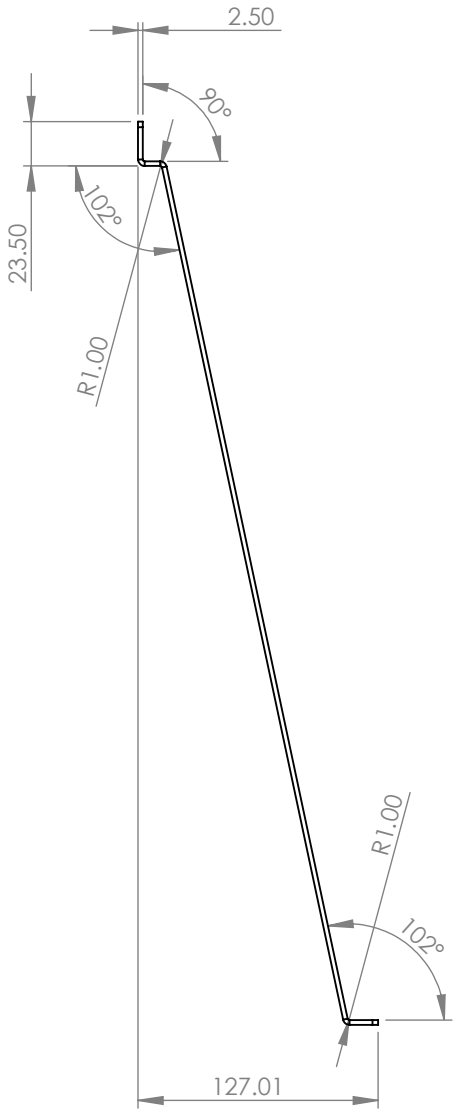

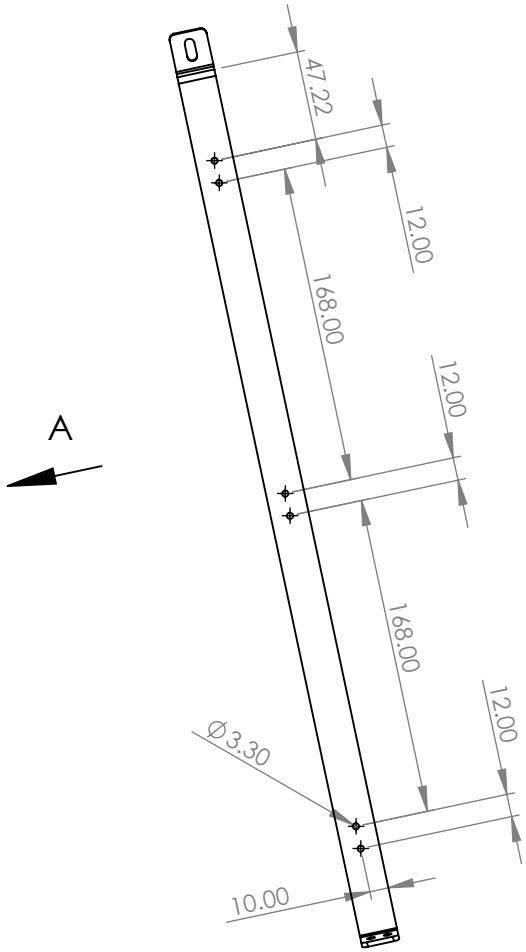

VIEW A

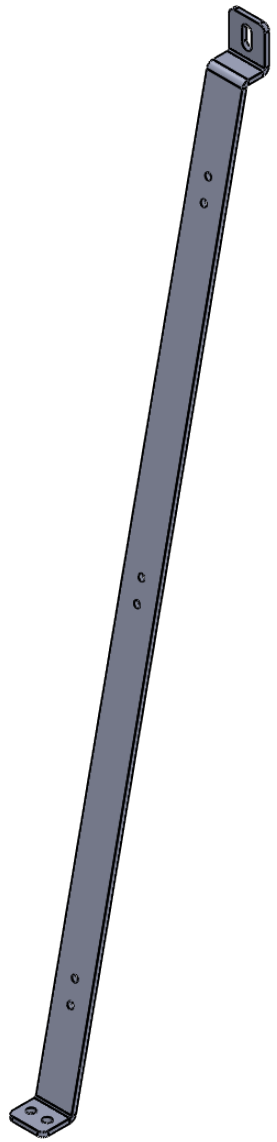

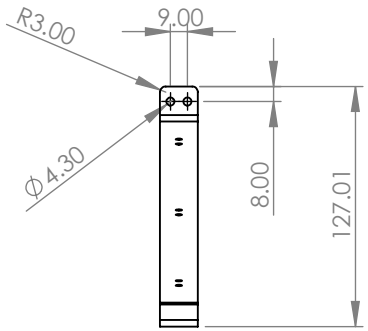

TITLE: Support Beam	
MATERIAL: Mild Steel	FINISH: Black E-Coat
DIMENSIONS ARE IN MILLIMETERS	info@makertech3d.com

MAKERTECH