POWER SUPPLY

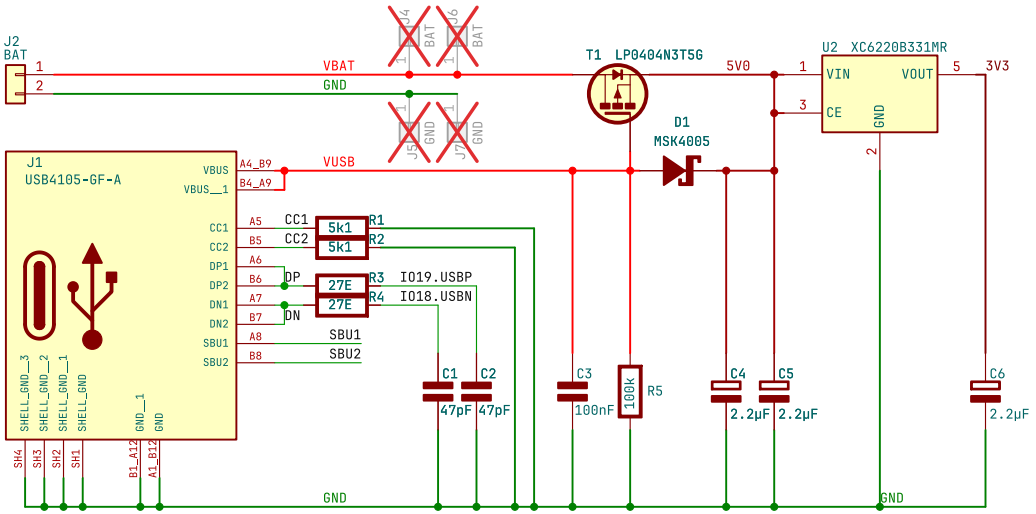

USB-C BREAKOUT

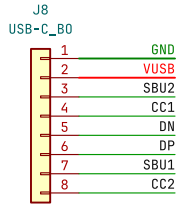

SAO BREAKOUT

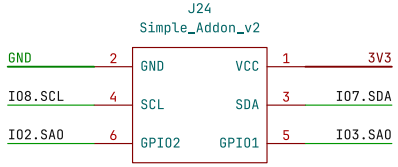

MICROCONTROLLER

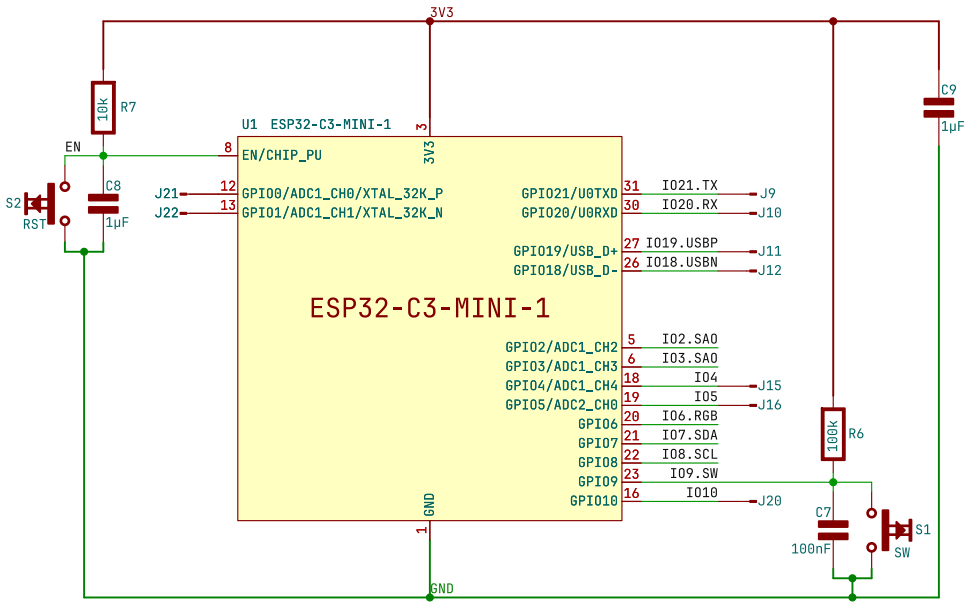

PERIPHERALS

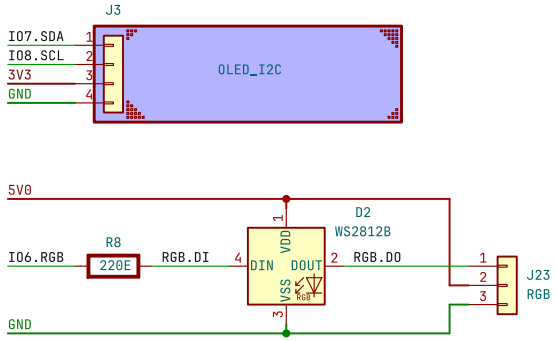

minimalistic badge for MakerVille 2025

MakerVille

Sheet: /

File: mbadge25.kicad_sch

Title: mbadge25

Size: A4	Date: 2025-03-20	**Rev: v1**
KiCad E.D.A. 9.0.0		Id: 1/1