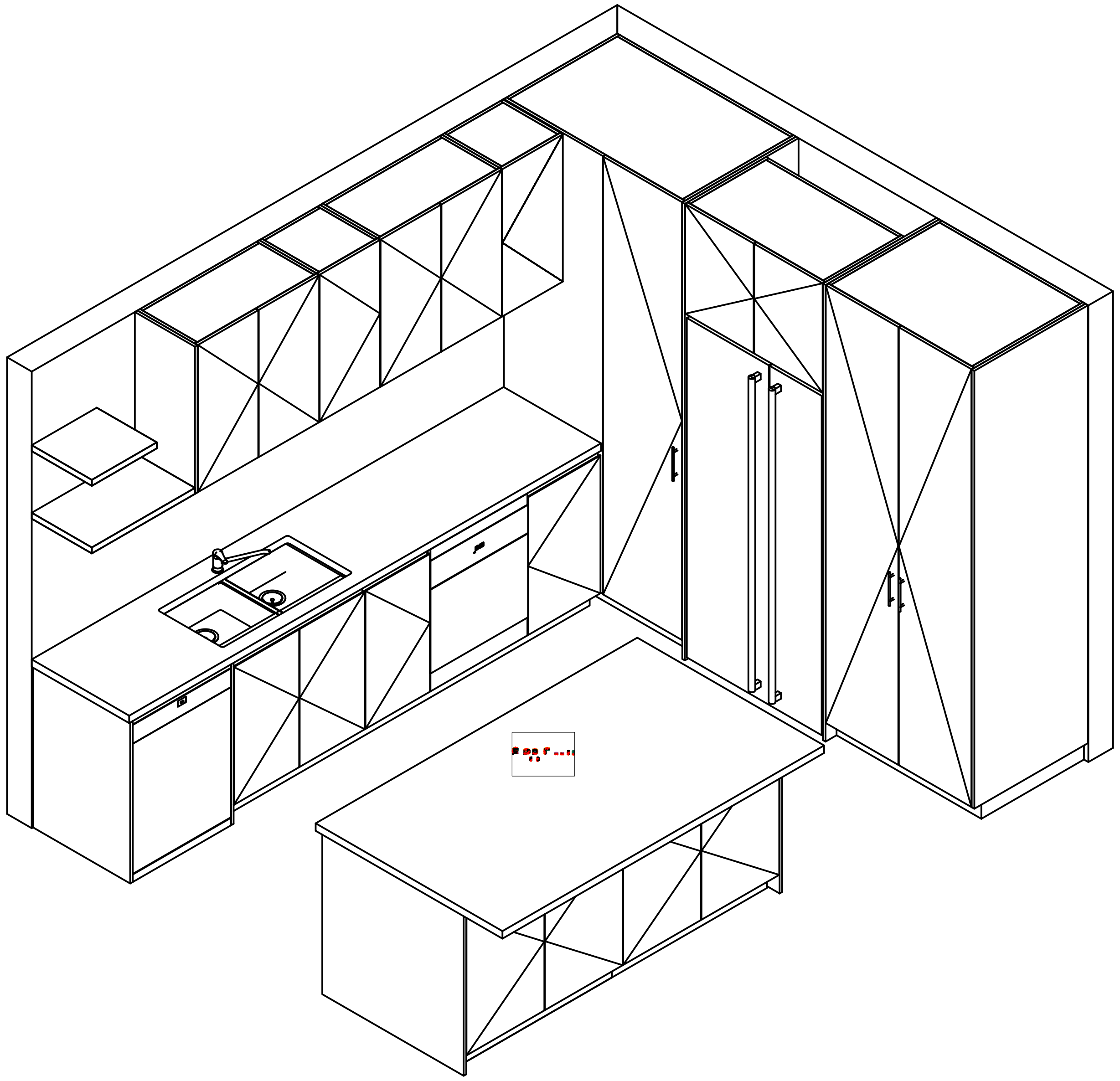

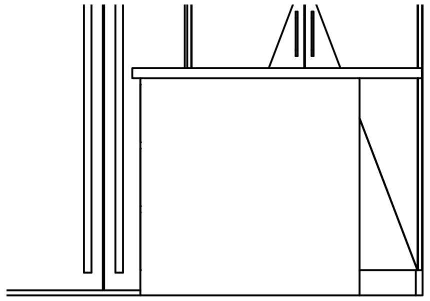

Microvellum Draftsperson
Mob: +61 4888 955 06
WhtsApp: +61 4888 955 06
makhougre@gmail.com

PROJECT:

PROJECT NAME

CONTACT

PROJECT ADDRESS
PROJECT PHONE
PROJECT EMAIL

ITEM	MATERIAL
Base Exterior	TBD
Tall Exterior	TBD
Upper Exterior	TBD
Interior	TBD
Handle	TBD
Drawer System	TBD

REVISION
REVISION
REVISION
DRAWIN BY

DATE
DATE

SHEET
A301

ITEM	MATERIAL
Base Exterior	Polytec Classic White Matt 16 mm
Tall Exterior	Polytec Classic White Matt 16 mm
Upper Exterior	Polytec Classic White Matt 16 mm
Interior	White Melamine 16mm 2S
Handle	None
Drawer System	DTC Dragon Pro

Microvellum Draftsperson
Mob: +61 4888 955 06
WhtsApp: +61 4888 955 06
makhougre@gmail.com

PROJECT:
TAZO_Project_SAM

SAM
Melbourne
04 888 955 06
makhougre@gmail.com

REVISION
REVISION
REVISION
DRAWN BY

DATE
DATE
SHEET
TITLE

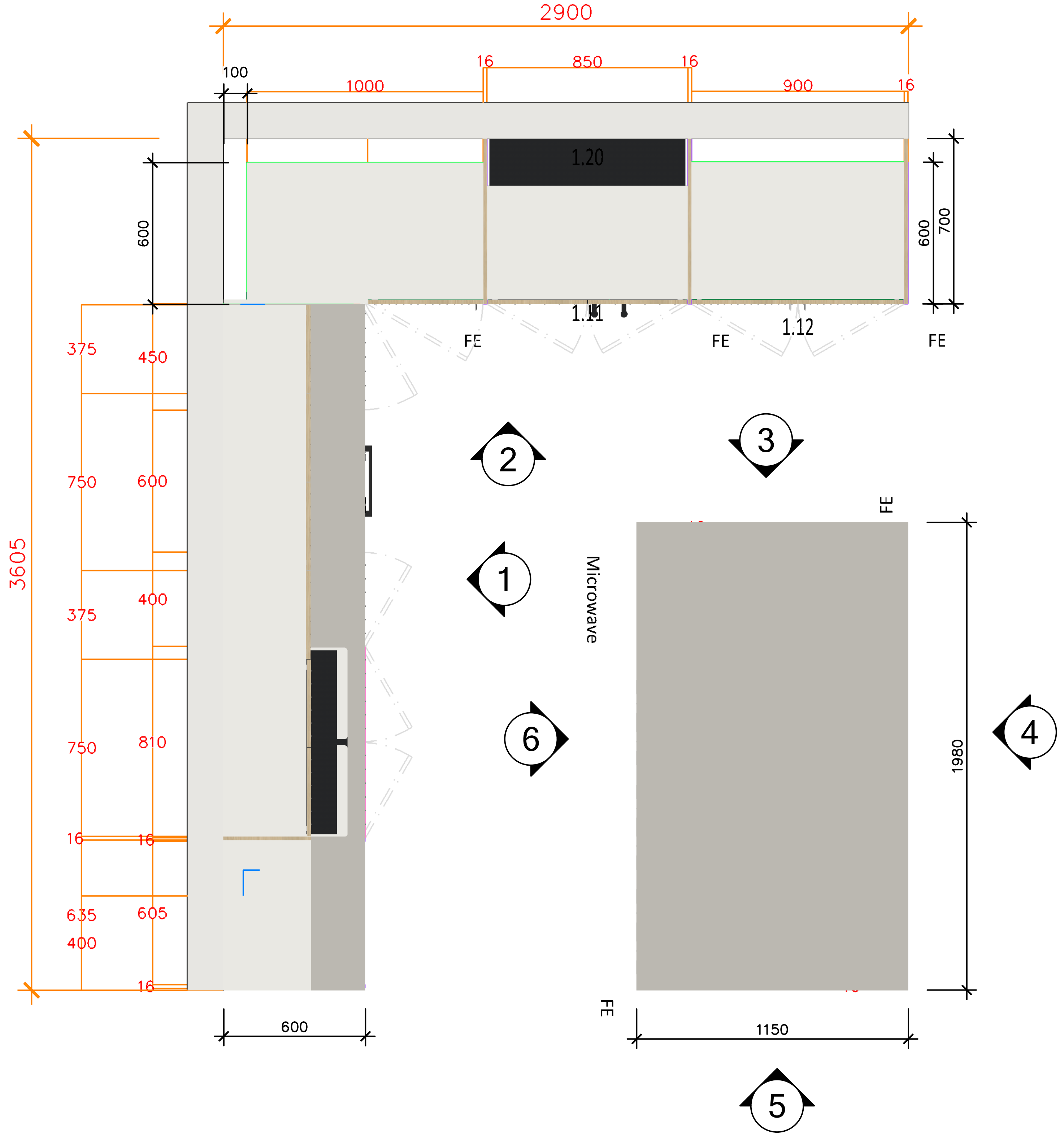
2900
100
1000
16
850
16
900
16
1.20
600
600
700
3605
375
450
750
600
375
400
750
810
16
16
635
400
605
16
1.11
1.12
FE
FE
FE
FE
FE
Microwave
1
2
3
4
5
6
1980
600
1150

No. Plan View
–
Room
1:20

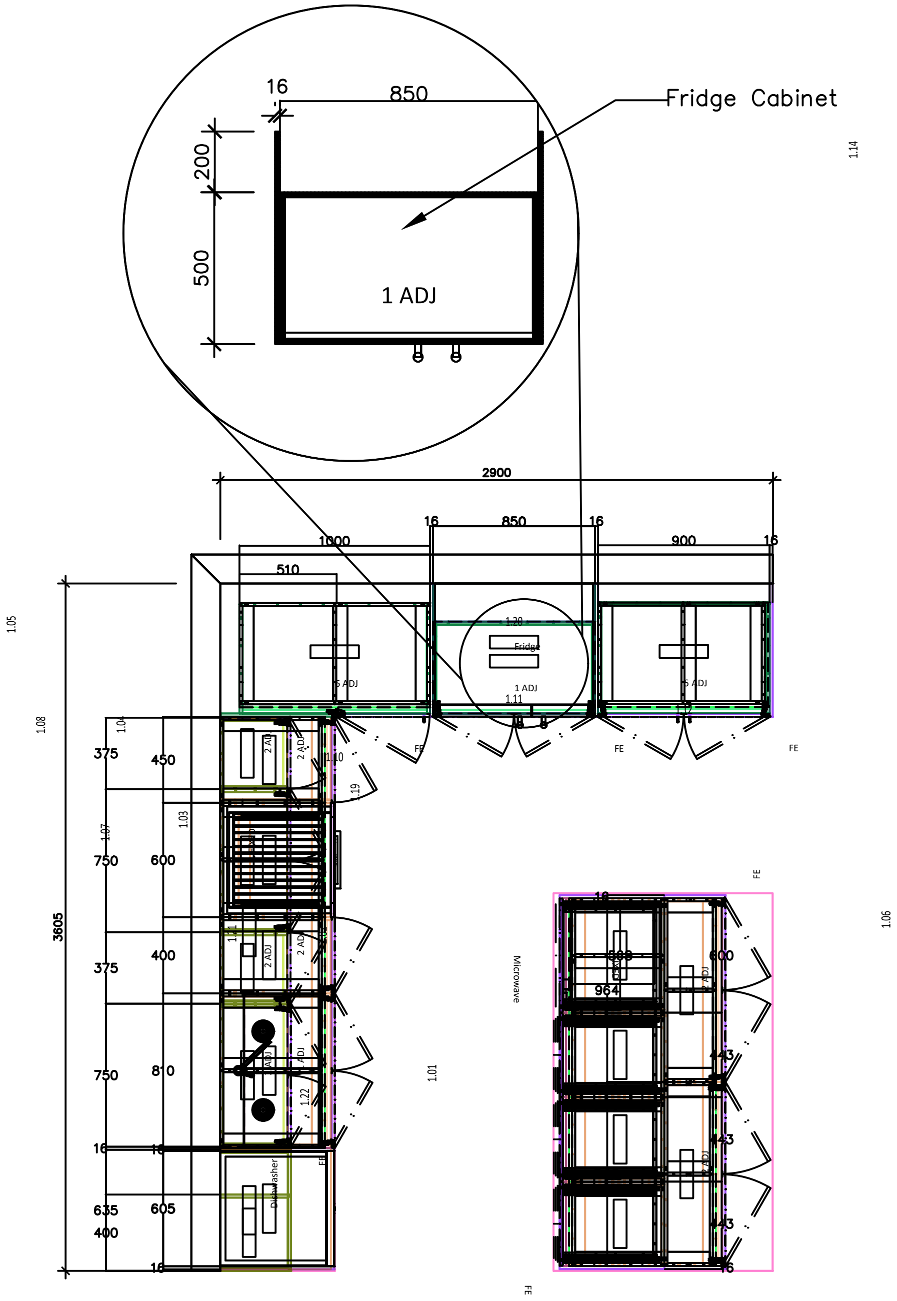
Fridge Cabinet
16
850
200
500
1 ADJ
2900
1000
16
850
16
900
16
510
Fridge
1 ADJ
3605
375
450
750
600
375
400
750
810
16
16
635
605
400
16
Microwave
964
600

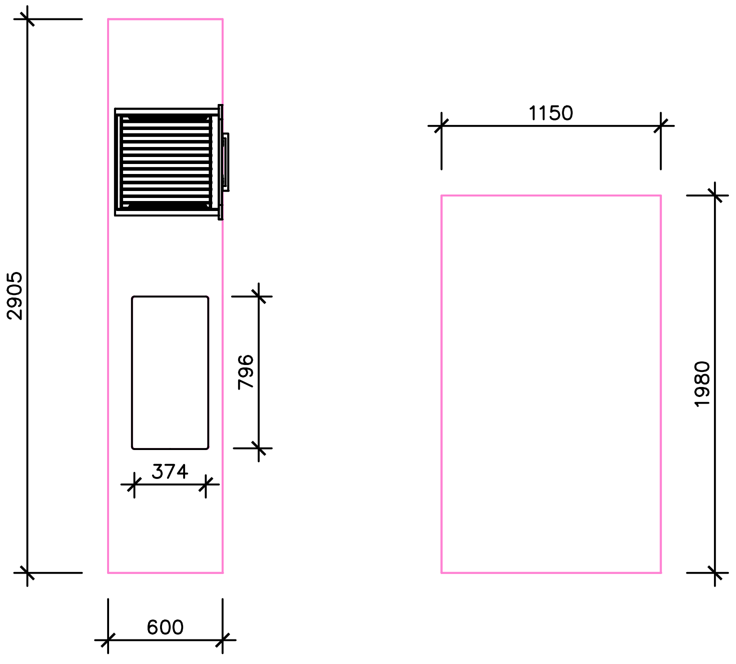
2905
796
374
600
1150
1980

No. Plan Countertops
—
Room
1:20

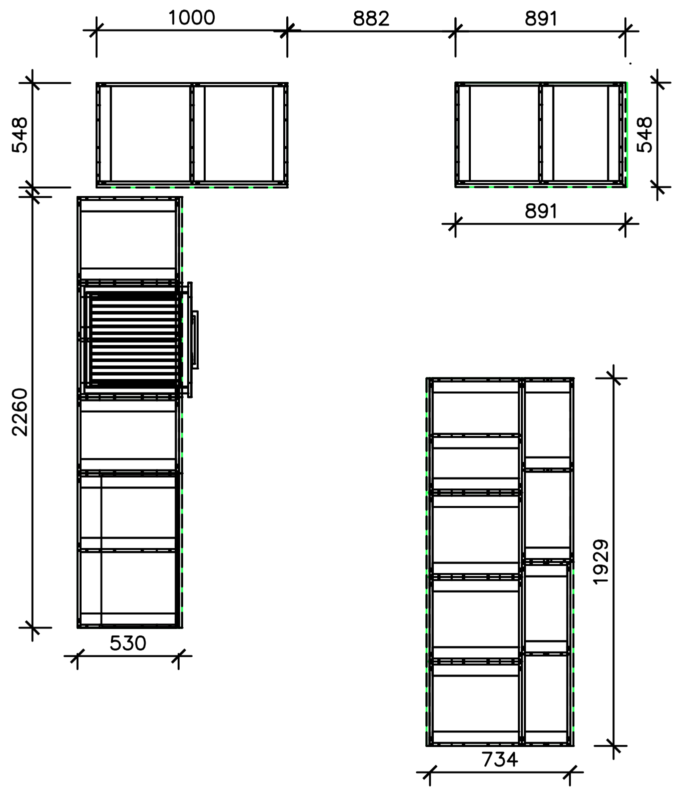
1000
882
891
548
548
891
2260
530
1929
734

No. Plan Kicker
—
Room
1:20

Microvellum Draftsperson
Mob: +61 4888 955 06
WhtsApp: +61 4888 955 06
makhougre@gmail.com

PROJECT:
TAZO_Project_SAM

SAM
Melbourne
04 888 955 06
makhougre@gmail.com

ITEM	MATERIAL
Base Exterior	White Melamine 16mm 1S
Tall Exterior	White Melamine 16mm 1S
Upper Exterior	White Melamine 16mm 1S
Interior	White Melamine 16mm 2S
Handle	Handle Rod_128mm
Drawer System	DTC Dragon Pro

REVISION	DATE DATE
REVISION	SHEET A303
REVISION	
DRAWN BY	

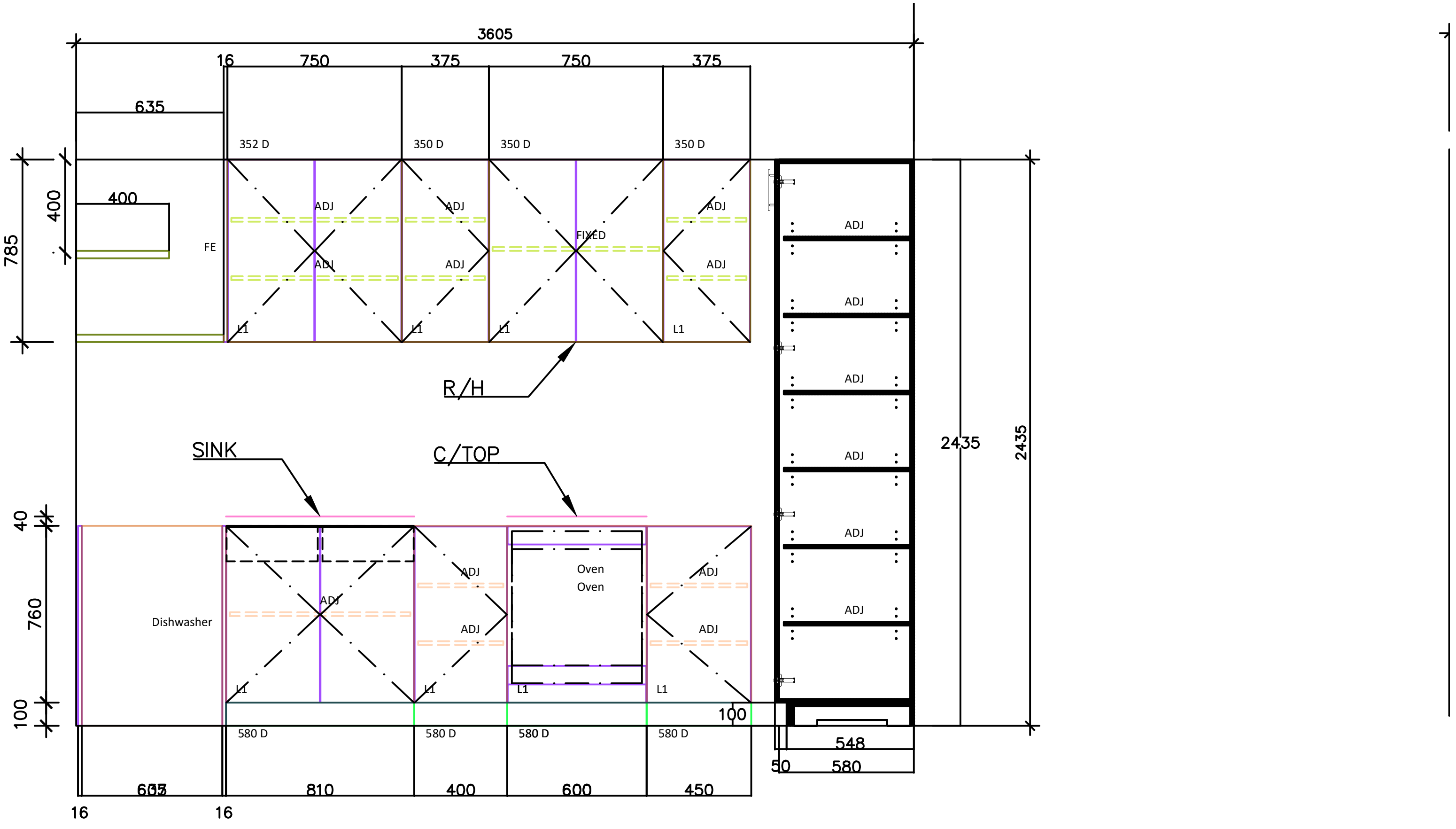
3605
16
750
375
750
375
635
352 D
350 D
350 D
350 D
785
400
400
FE
ADJ
FIXED
L1
R/H
SINK
C/TOP
40
760
100
Dishwasher
Oven
Oven
100
580 D
580 D
580 D
580 D
635
810
400
600
450
16
16
2435
2435
548
50
580

1 Elevation
Room
1:20

Microvellum Draftsperson
Mob: +61 4888 955 06
WhtsApp: +61 4888 955 06
makhougre@gmail.com

PROJECT:
TAZO_Project_SAM

SAM
Melbourne
04 888 955 06
makhougre@gmail.com

ITEM	MATERIAL
Base Exterior	White Melamine 16mm 1S
Tall Exterior	White Melamine 16mm 1S
Upper Exterior	White Melamine 16mm 1S
Interior	White Melamine 16mm 2S
Handle	Handle Rod_128mm
Drawer System	DTC Dragon Pro

REVISION	DATE DATE
REVISION	SHEET A402
REVISION	
DRAWN BY	

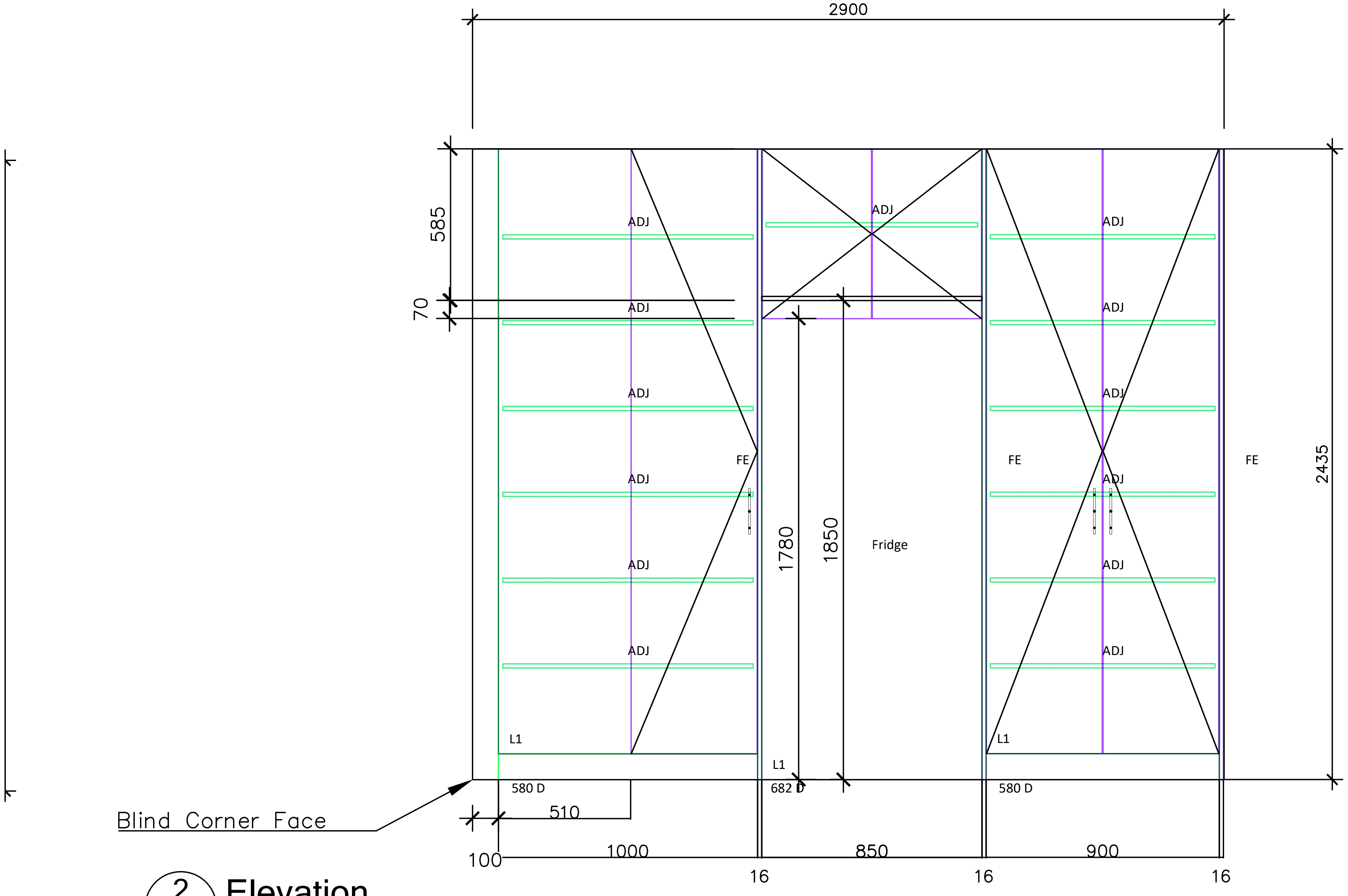
2900
585
70
ADJ
ADJ
ADJ
ADJ
ADJ
ADJ
ADJ
FE
FE
FE
1780
1850
Fridge
2435
L1
L1
L1
580 D
682 D
580 D
Blind Corner Face
510
100
1000
850
900
16
16
16

2
–
Elevation
Room
1:20

Microvellum Draftsperson
Mob: +61 4888 955 06
WhtsApp: +61 4888 955 06
makhougre@gmail.com

PROJECT:
TAZO_Project_SAM

SAM
Melbourne
04 888 955 06
makhougre@gmail.com

ITEM	MATERIAL
Base Exterior	White Melamine 16mm 1S
Tall Exterior	White Melamine 16mm 1S
Upper Exterior	White Melamine 16mm 1S
Interior	White Melamine 16mm 2S
Handle	Handle Rod_128mm
Drawer System	DTC Dragon Pro

REVISION	DATE DATE
REVISION	SHEET A403
REVISION	
DRAWN BY	

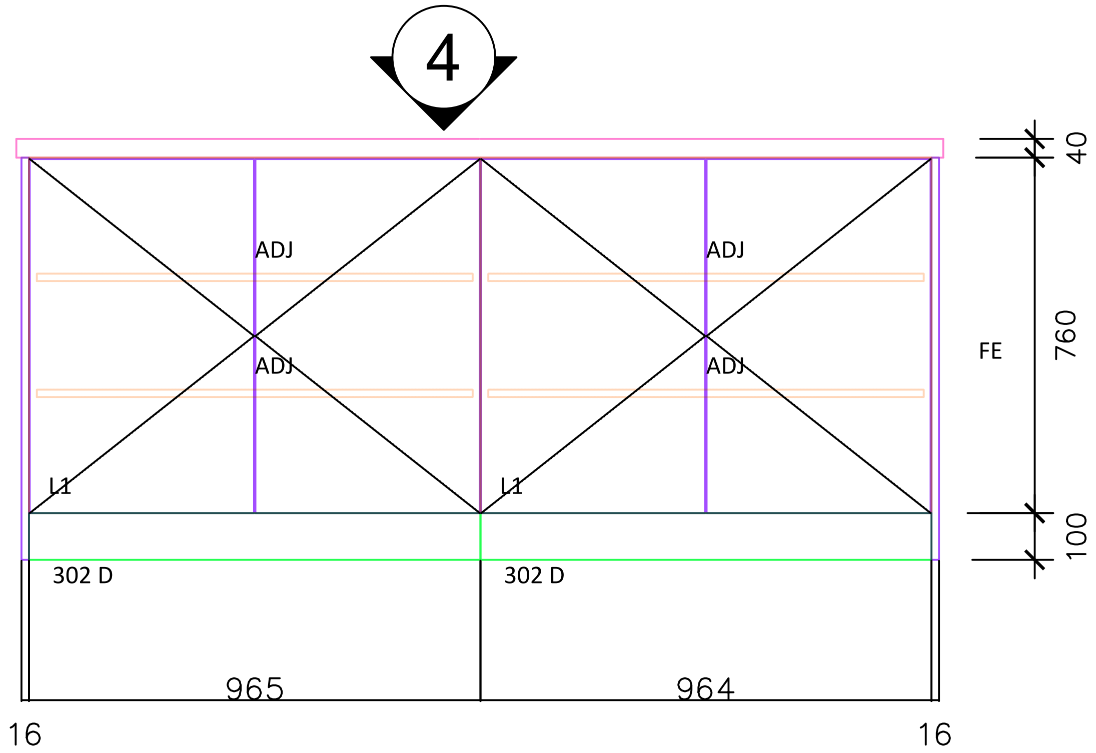
4
ADJ
ADJ
ADJ
ADJ
L1
L1
302 D
302 D
965
964
16
16
FE
40
760
100

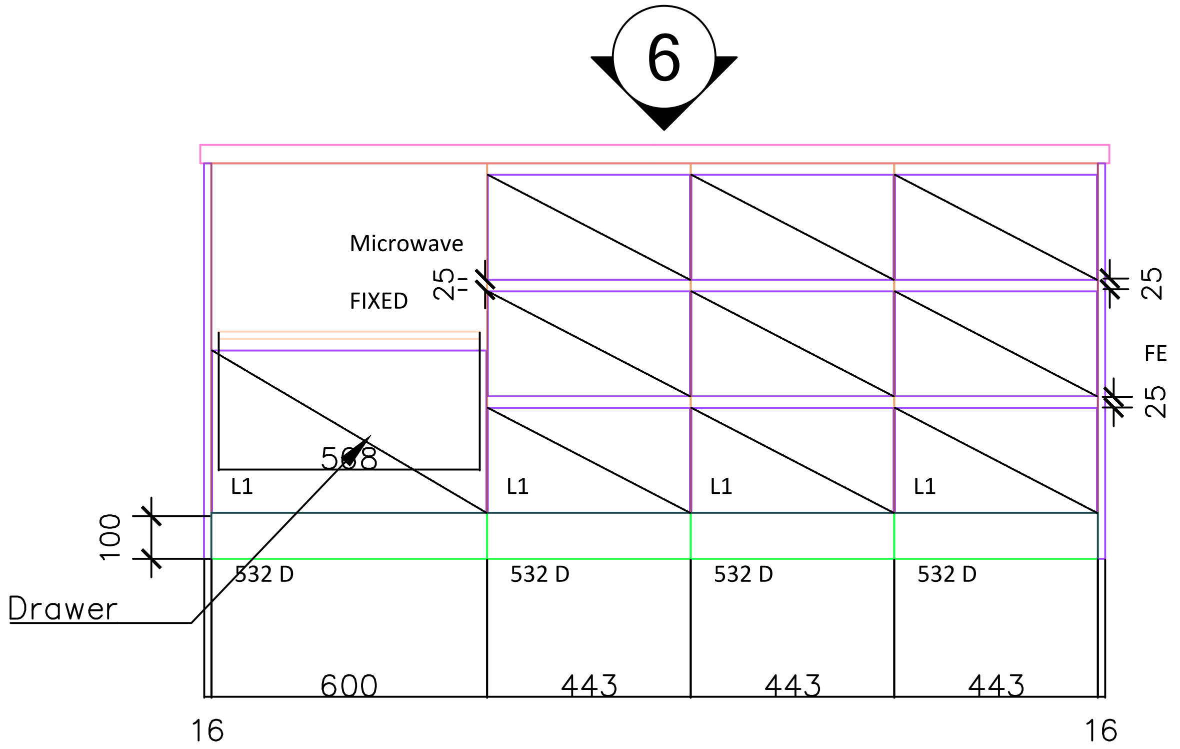
6
Microwave
FIXED
25
568
L1
L1
L1
L1
100
532 D
532 D
532 D
532 D
Drawer
600
443
443
443
16
16
25
FE
25

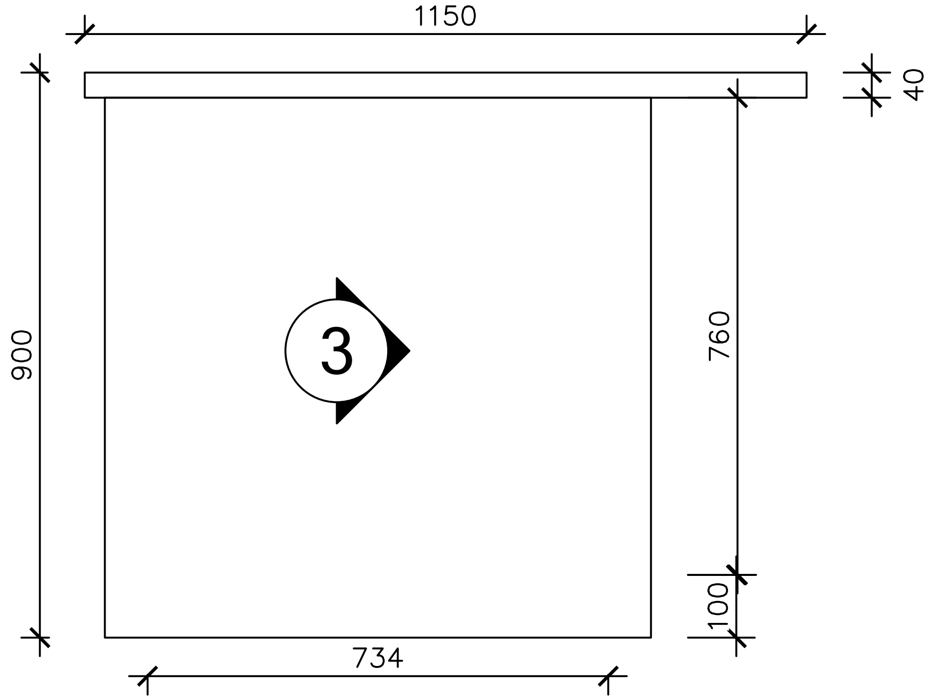
1150
40
900
3
760
100
734

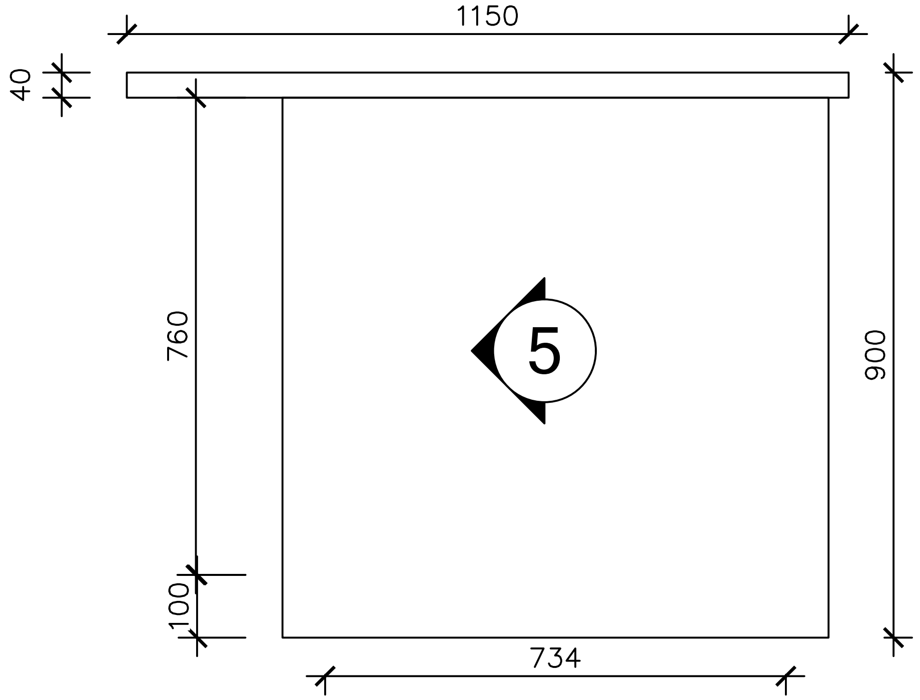
1150
40
760
5
900
100
734

Microvellum Draftsperson
Mob: +61 4888 955 06
WhtsApp: +61 4888 955 06
makhougre@gmail.com

PROJECT:
TAZO_Project_SAM

SAM
Melbourne
04 888 955 06
makhougre@gmail.com

ITEM	MATERIAL
Base Exterior	White Melamine 16mm 1S
Tall Exterior	White Melamine 16mm 1S
Upper Exterior	White Melamine 16mm 1S
Interior	White Melamine 16mm 2S
Handle	Handle Rod_128mm
Drawer System	DTC Dragon Pro

REVISION
REVISION
REVISION
DRAWN BY
DATE
DATE
SHEET
A404

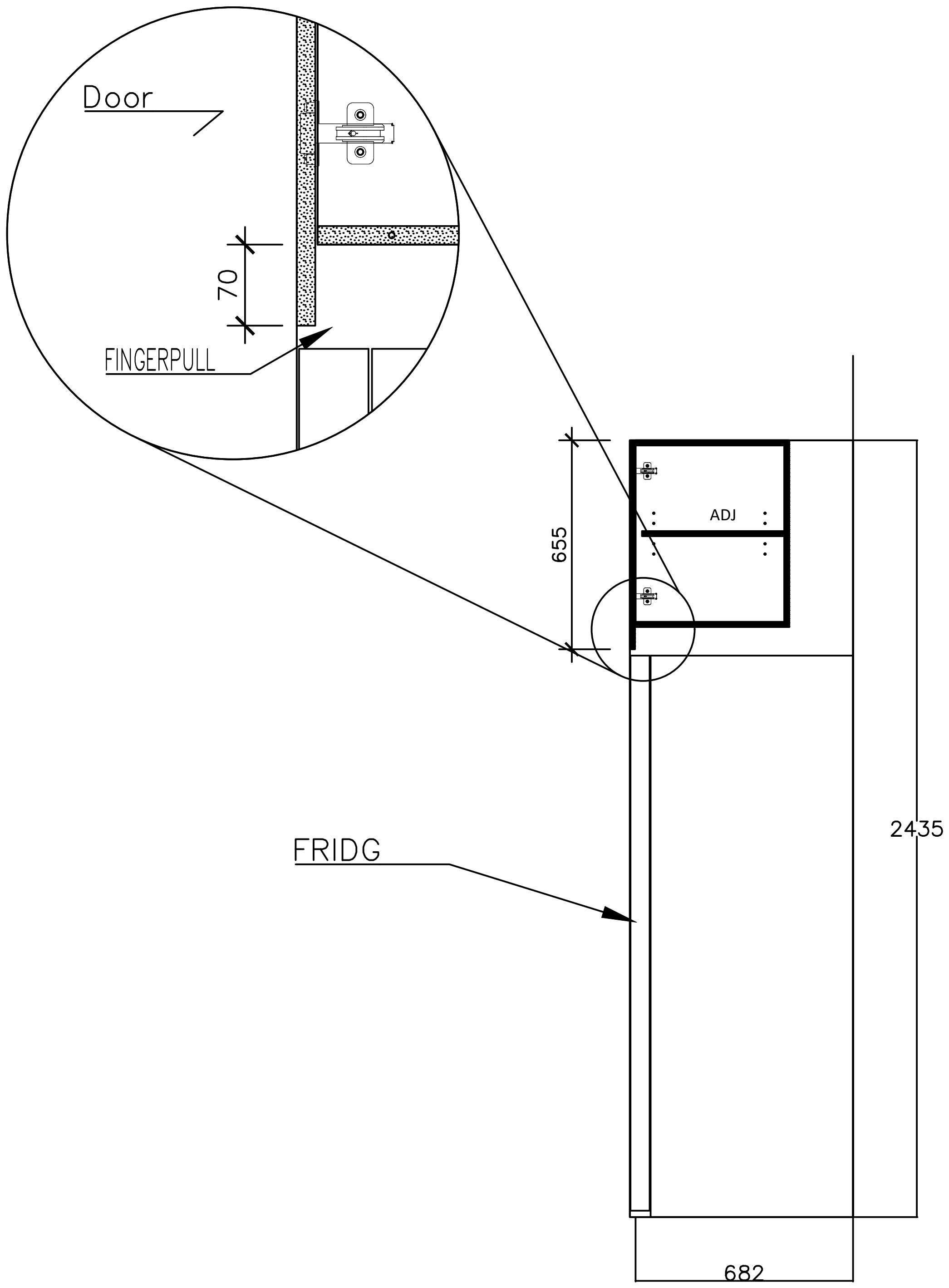
Door
70
FINGERPULL
655
ADJ
FRIDG
2435
682

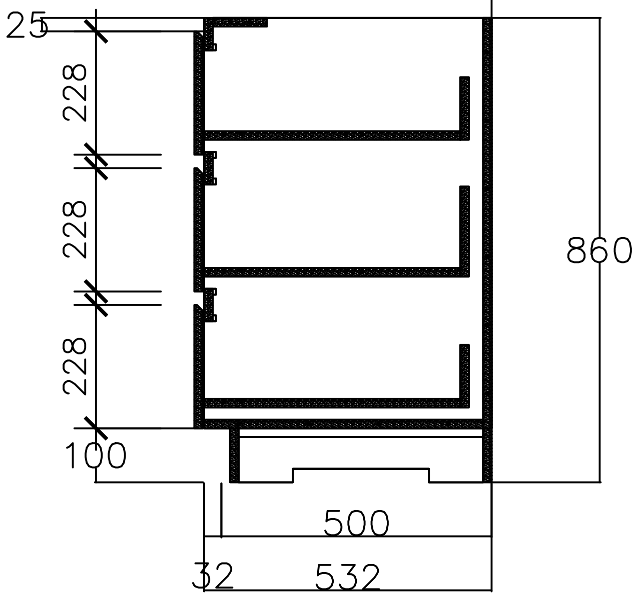
25
228
228
228
100
860
500
32
532

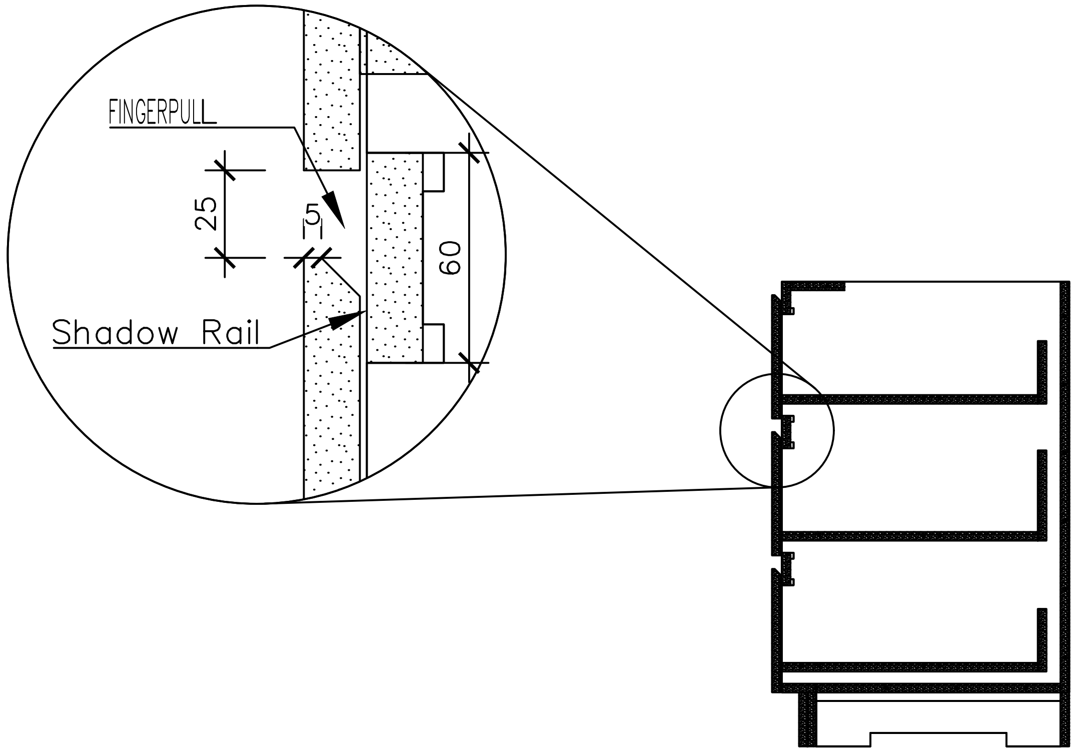
FINGERPULL
25
5
60
Shadow Rail

Microvellum Draftsperson
Mob: +61 4888 955 06
WhtsApp: +61 4888 955 06
makhougre@gmail.com

PROJECT:

TAZO_Project_SAM

SAM
Melbourne
04 888 955 06
makhougre@gmail.com

ITEM	MATERIAL
Base Exterior	White Melamine 16mm 1S
Tall Exterior	White Melamine 16mm 1S
Upper Exterior	White Melamine 16mm 1S
Interior	White Melamine 16mm 2S
Handle	Handle Rod_128mm
Drawer System	DTC Dragon Pro

REVISION
REVISION
REVISION
DRAWN BY

DATE
DATE

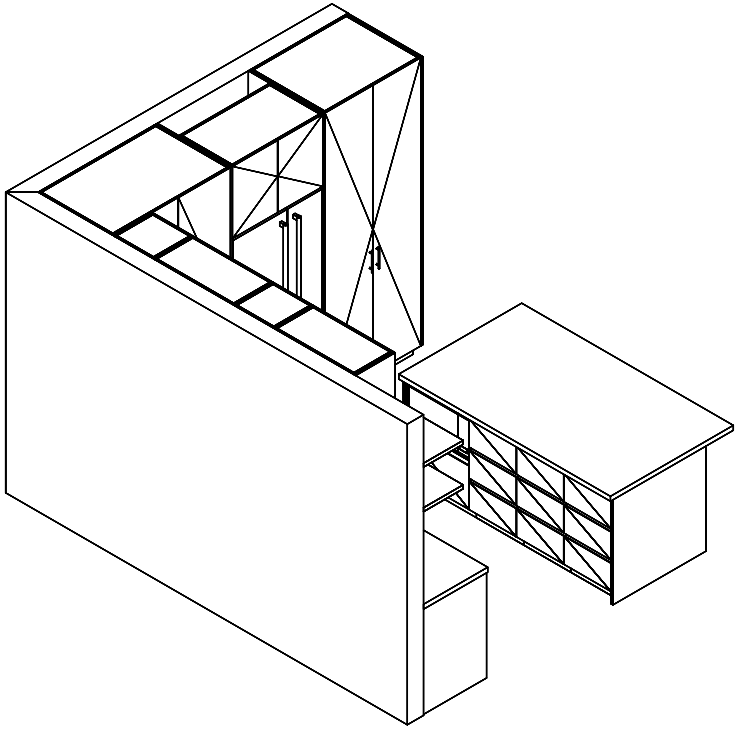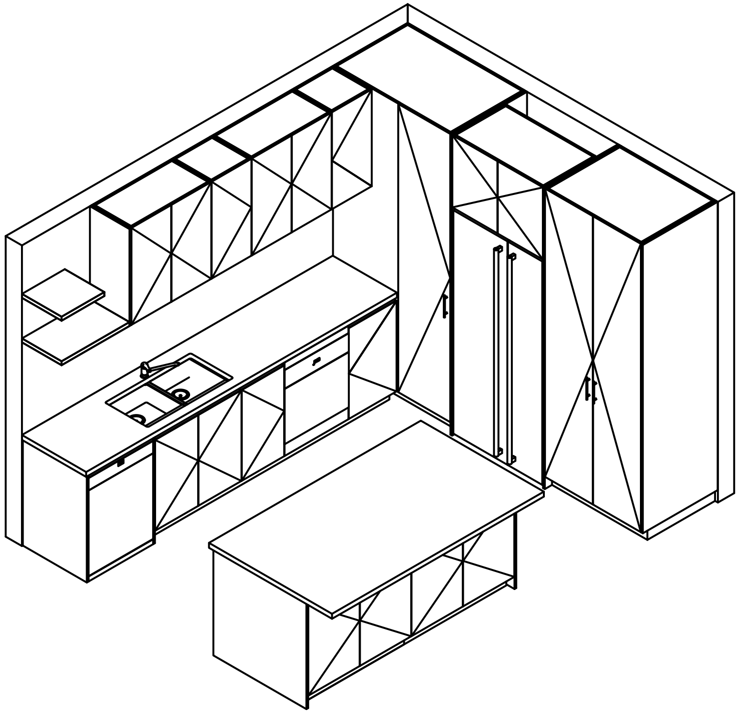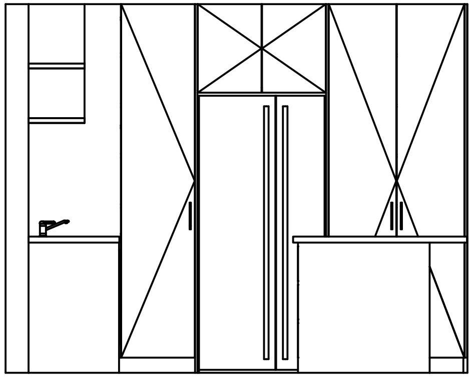SHEET
A405