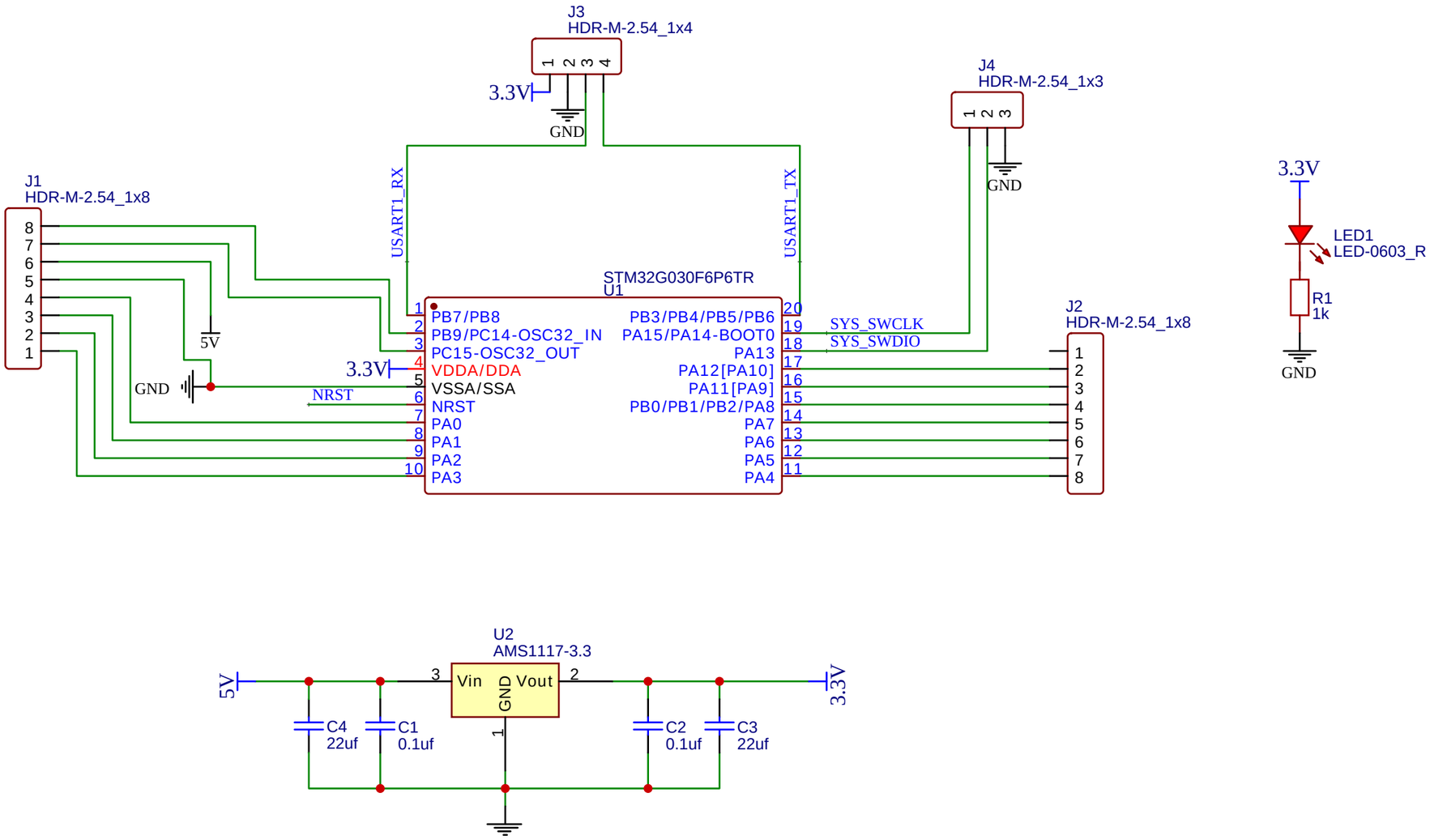

TITLE: MotoBit		REV: 1.0
立创EDA	Company: Makinc——liu	Sheet: 1/1
	Date: 2021-11-30 Drawn By: 2745165418	