Proactively Prevent Unplanned Downtime Caused by Component Failures and Major Repairs.

Hapman equipment is robustly engineered to run trouble-free for years. But it must be properly maintained to prevent component failures and major repairs from causing unplanned downtime. To keep maintenance on track, enroll in our Managed Maintenance Program (MMP). Each visit will start with a top-to-bottom inspection of your Hapman equipment by one of our experienced technicians. It will also include:

- Maintenance baseline for your Hapman equipment to discover any early warnings of part wear and/or impending component failures.
- Detailed inspection report pinpointing maintenance/repair needs, so that -if you choose- so they can be addressed before causing a problem.
- OEM maintenance expertise and recommendations concerning equipment maintenance, improvements, and modifications.

Maintenance Program Options:

Hapman offers three Managed Maintenance Program (MMP) options based on the level of assistance you want. All three will improve your machine uptime, reliability, performance, and longevity.

Exclusive Savings!
When you sign up for the Hapman MMP!

SEMI-ANNUAL: Two (2) service visits per year by a Hapman technician at discounted MMP Rates. Discount on parts (10%) and standard services rates (15%) for all non-MMP visits.

QUARTERLY: Four (4) service visits per year by a Hapman technician at discounted MMP Rates. Discount on parts (15%) and standard services rates (20%) for all non-MMP visits.

MONTHLY/WEEKLY: Multiple service visits per year by a Hapman technician. Increased custom discounts for parts and services.

If you need technical support, give us a call. We are available 24/7.

For more information or to schedule your first visit, contact Hapman today!
hapman.com | 1-800-427-6260 | service@hapman.com

HAPMAN
Ideas that move.

REV	DESCRIPTION	DATE	BY
0.0	AS BUILT	6/29/23	MRL

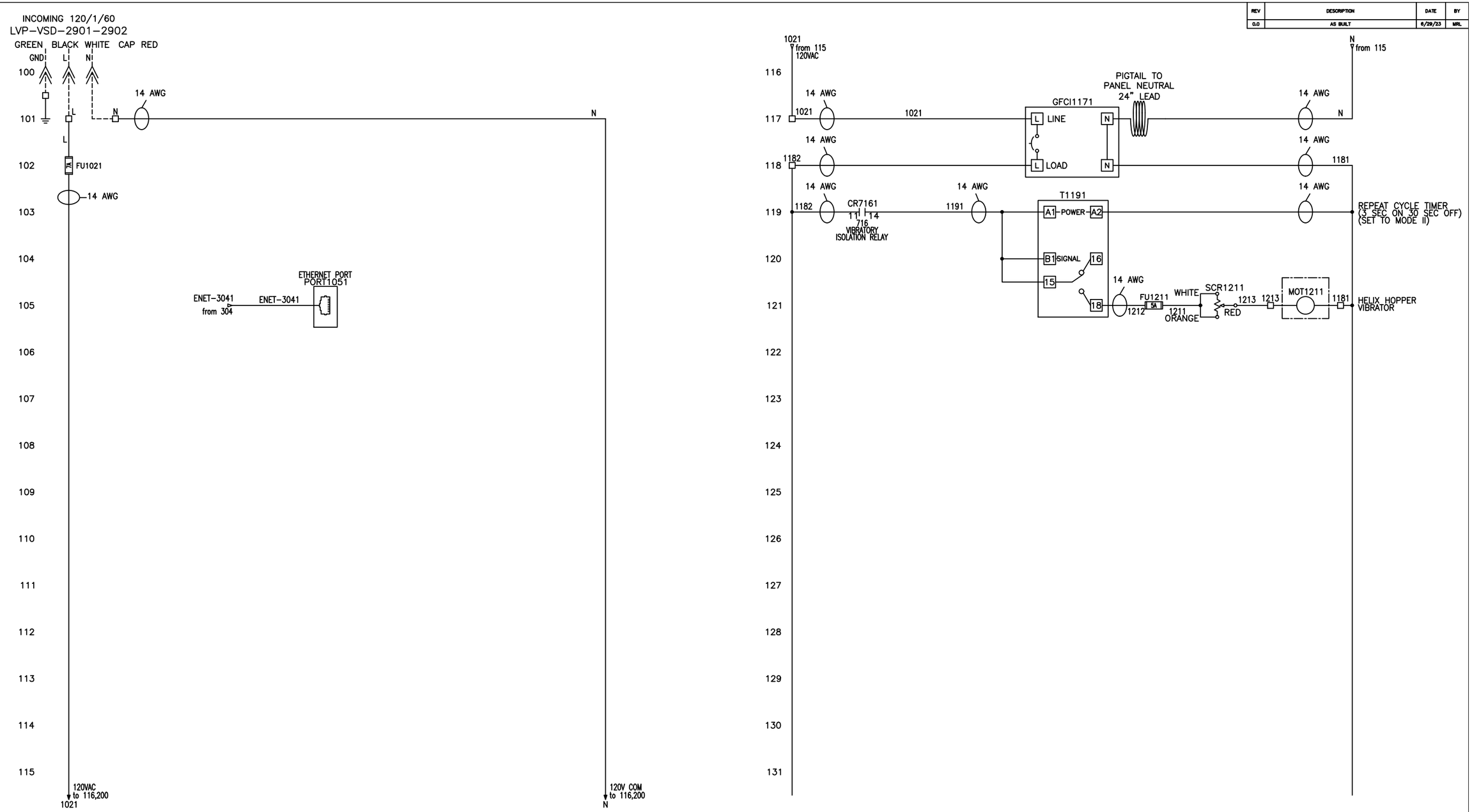

CONDUCTOR WIRE CODE

BLACK:	GREATER THAN 120VAC
RED:	120VAC OR LESS
WHITE:	GROUNDED AC LINE
BLUE:	UN GROUNDED VDC
WH/BLU:	GROUNDED VDC
GREEN:	GROUNDING CONDUCTORS
ORANGE:	CIRCUITS THAT REMAIN ENERGIZED WHEN MAIN DISC. IS "OFF"

WIRE GAUGE

MOTOR CIRCUITS:	MIN. 12 AWG
CONTROL CIRCUITS:	MIN. 16 AWG
PLC I/O:	MIN. 18 AWG
FUSES:	LINE/LOAD SIDE SHALL BE EQUAL AWG
RETURN/SUPPLY:	SHALL BE EQUAL AWG

LEGEND

--------	FIELD WIRING
————	PANEL WIRING

HAPMAN
ideas that move
5944 E. N AVE., KALAMAZOO, MICHIGAN 49048
PHONE (269) 343-1675 FAX (269) 349-2477

DATE 4/21/23	JOB NO. X20335-AC	DRAWN MRL	
SCALE N/A		BOM = 1	DWG = 1

TITLE

120VAC WIRING DIAGRAM

TYPE 4X – HELIX CONVEYOR HI/LO

CUST. PROJECT SERVICES (FRITO LAY MODESTO)

SHEET 1 OF 16 | DWG. NO. X20335AC-B00 | REV. 0.0

REV	DESCRIPTION	DATE	BY
0.0	AS BUILT	6/29/23	MRL

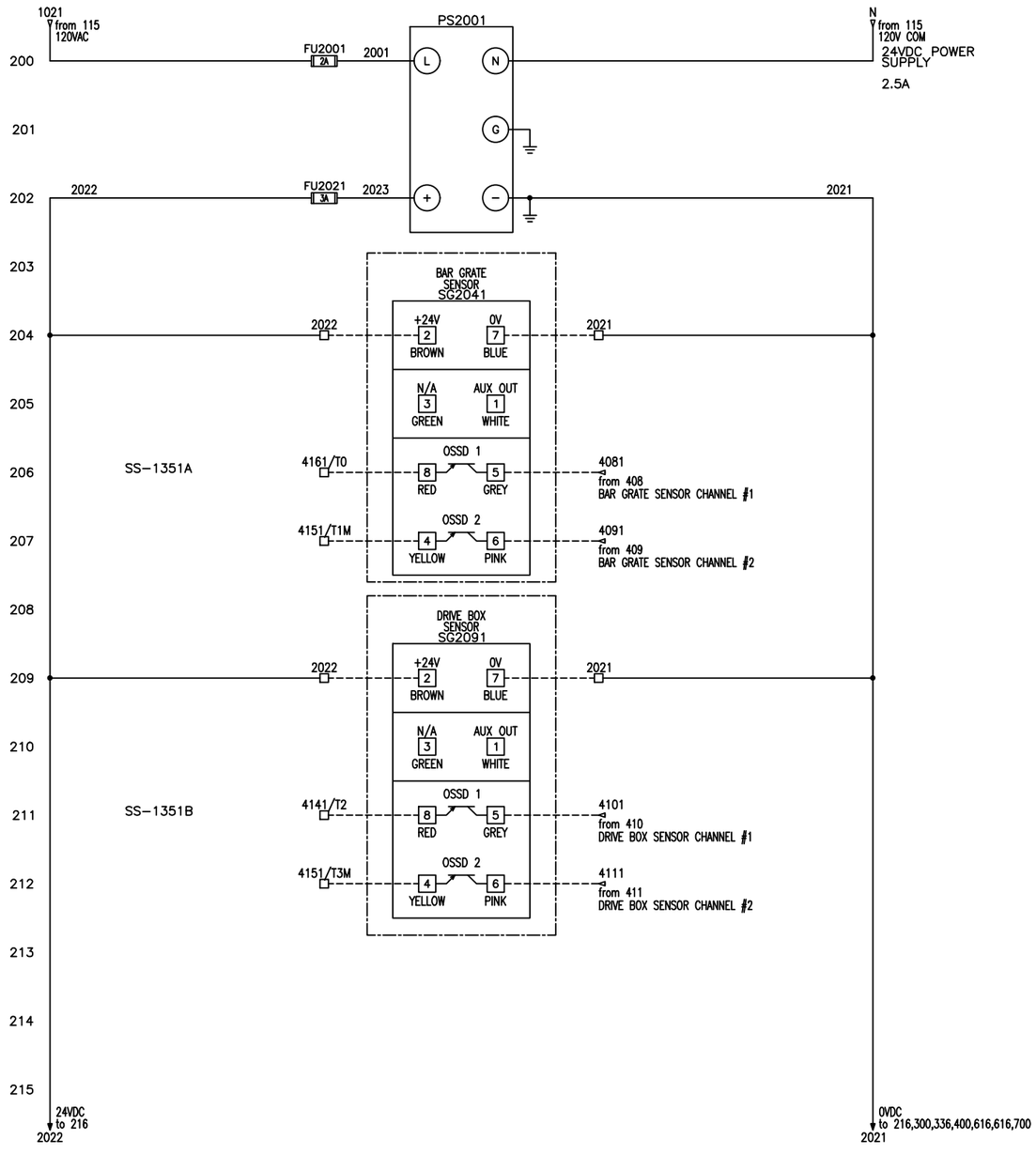

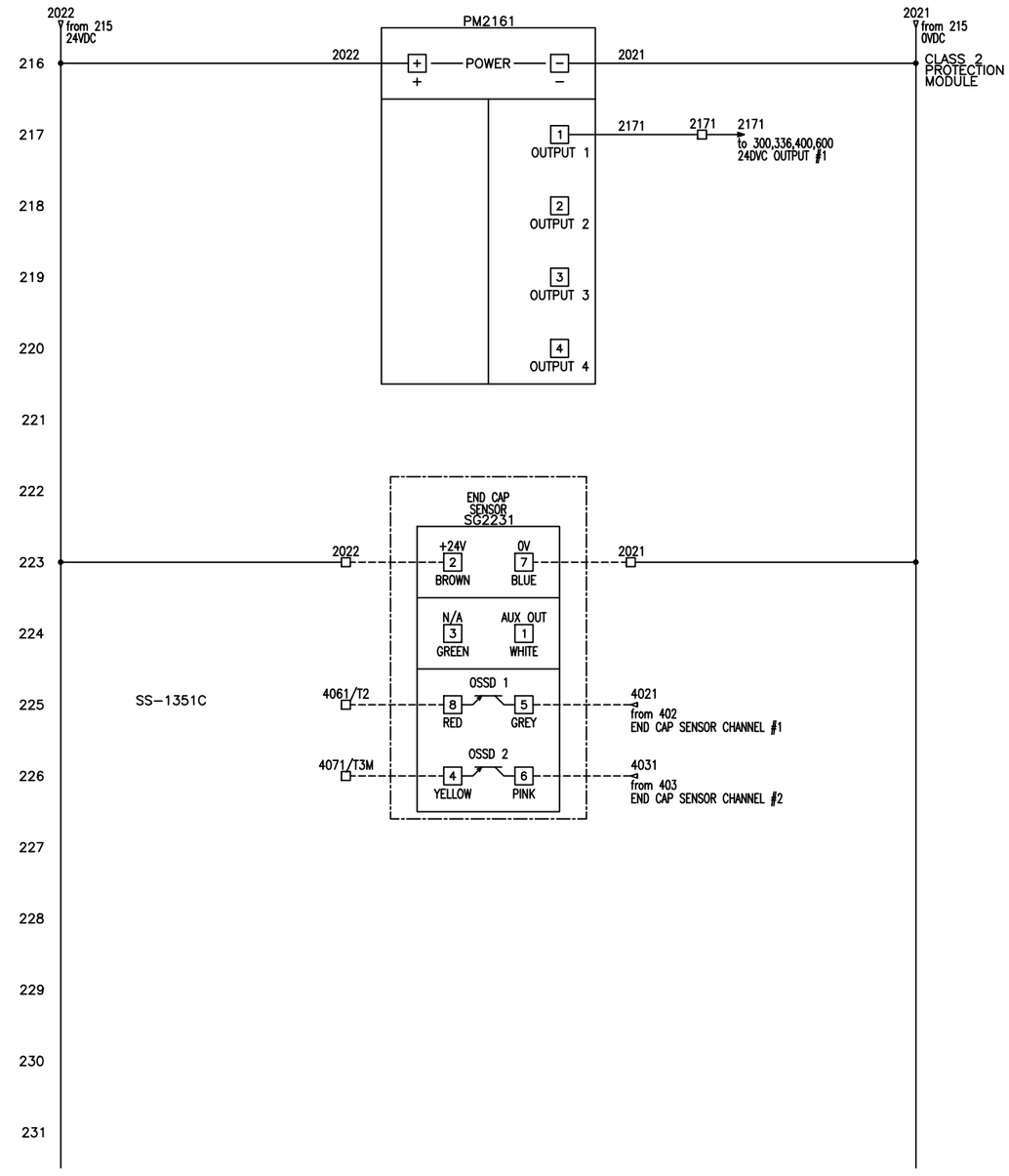

CONDUCTOR WIRE CODE

BLACK:	GREATER THAN 120VAC
RED:	120VAC OR LESS
WHITE:	GROUNDED AC LINE
BLUE:	UN GROUNDED VDC
WH/BLU:	GROUNDED VDC
GREEN:	GROUNDING CONDUCTORS
ORANGE:	CIRCUITS THAT REMAIN ENERGIZED WHEN MAIN DISC. IS "OFF"

WIRE GAUGE

MOTOR CIRCUITS:	MIN. 12 AWG
CONTROL CIRCUITS:	MIN. 16 AWG
PLC I/O:	MIN. 18 AWG
FUSES:	LINE/LOAD SIDE SHALL BE EQUAL AWG
RETURN/SUPPLY:	SHALL BE EQUAL AWG

LEGEND

--------	FIELD WIRING
————	PANEL WIRING

HAPMAN
ideas that move
5944 E. N AVE., KALAMAZOO, MICHIGAN 49048
PHONE (269) 343-1675 FAX (269) 349-2477

DATE 4/21/23	JOB NO. X20335-AC	DRAWN MRL	
SCALE N/A		BOM = 1	DWG = 1

TITLE

24VDC WIRING DIAGRAM

TYPE 4X – HELIX CONVEYOR HI/LO

CUST. PROJECT SERVICES (FRITO LAY MODESTO)

SHEET	DWG. NO.	REV.
2 OF 16	X20335AC-B00	0.0

REV	DESCRIPTION	DATE	BY
0.0	AS BUILT	6/29/23	MRL

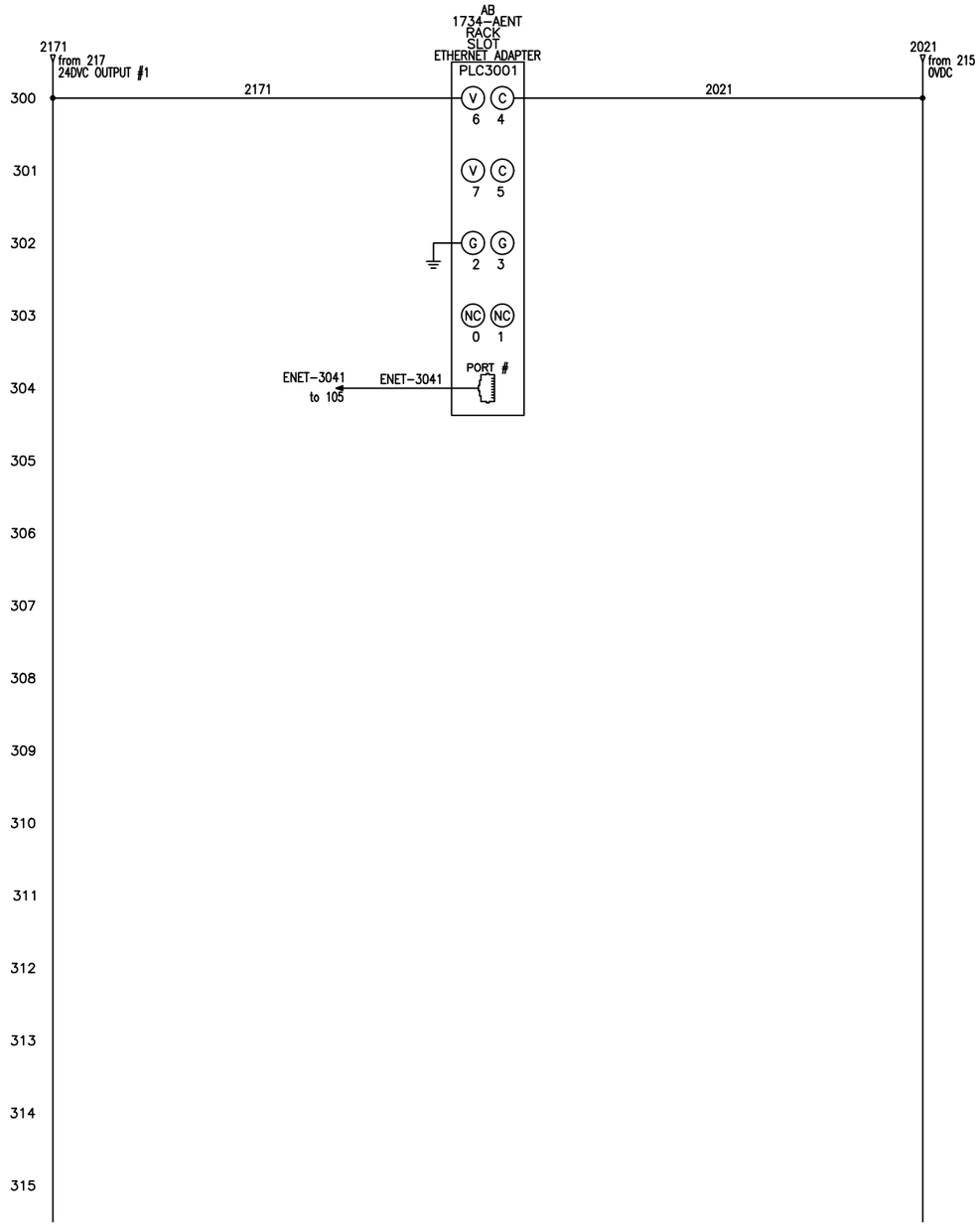

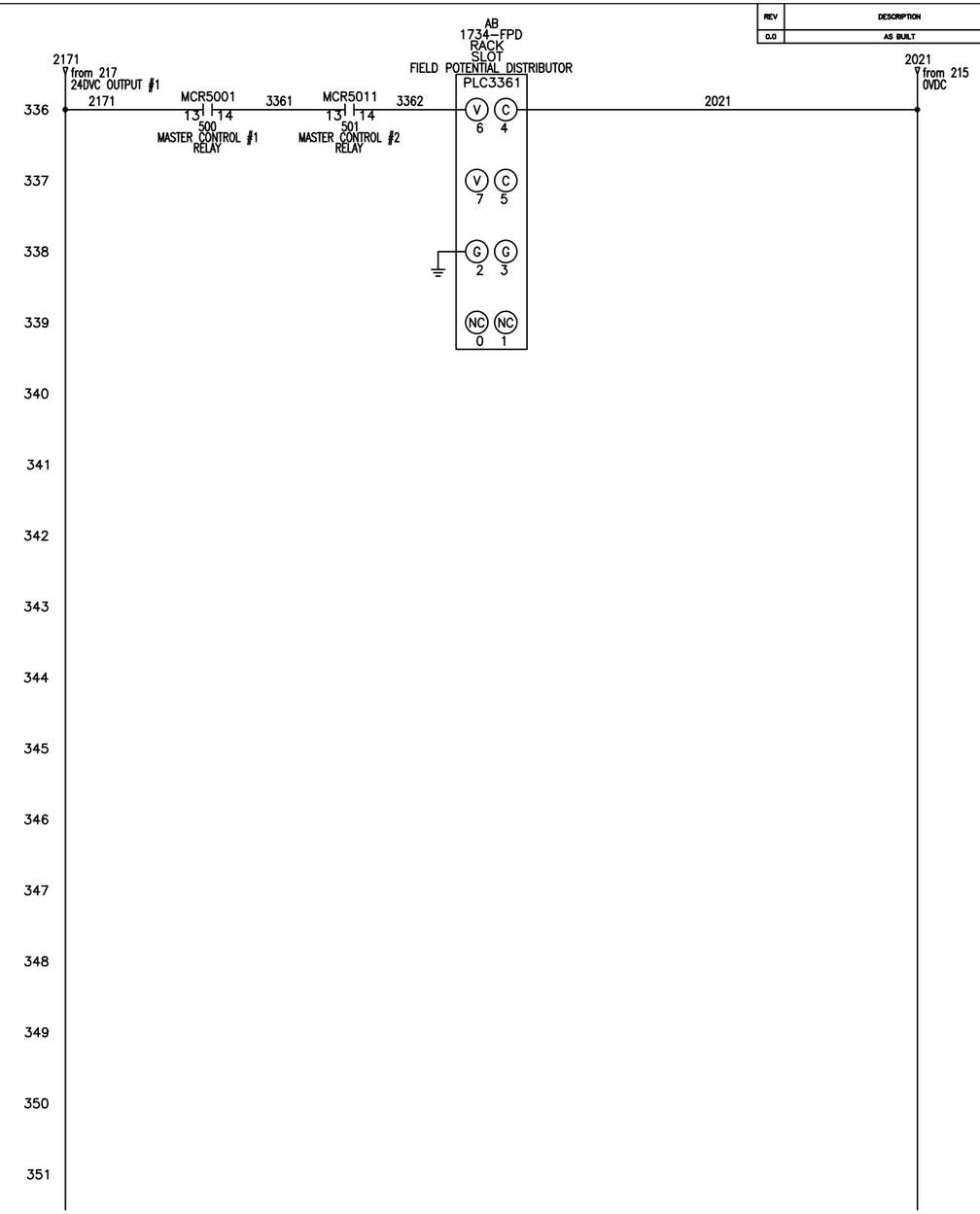

CONDUCTOR WIRE CODE

BLACK:	GREATER THAN 120VAC
RED:	120VAC OR LESS
WHITE:	GROUNDED AC LINE
BLUE:	UN GROUNDED VDC
WH/BLU:	GROUNDED VDC
GREEN:	GROUNDING CONDUCTORS
ORANGE:	CIRCUITS THAT REMAIN ENERGIZED WHEN MAIN DISC. IS "OFF"

WIRE GAUGE

MOTOR CIRCUITS:	MIN. 12 AWG
CONTROL CIRCUITS:	MIN. 16 AWG
PLC I/O:	MIN. 18 AWG
FUSES:	LINE/LOAD SIDE SHALL BE EQUAL AWG
RETURN/SUPPLY:	SHALL BE EQUAL AWG

LEGEND

--------	FIELD WIRING
————	PANEL WIRING

HAPMAN
ideas that move
5944 E. N AVE., KALAMAZOO, MICHIGAN 49048
PHONE (269) 343-1675 FAX (269) 349-2477

DATE 4/21/23	JOB NO. X20335-AC	DRAWN MRL	
SCALE N/A		BOM = 1	DWG = 1

TITLE

PLC WIRING DIAGRAM

TYPE 4X – HELIX CONVEYOR HI/LO

CUST. PROJECT SERVICES (FRITO LAY MODESTO)

SHEET 3 OF 16 | DWG. NO. X20335AC-B00 | REV. 0.0

REV	DESCRIPTION	DATE	BY
0.0	AS BUILT	6/29/23	MRL

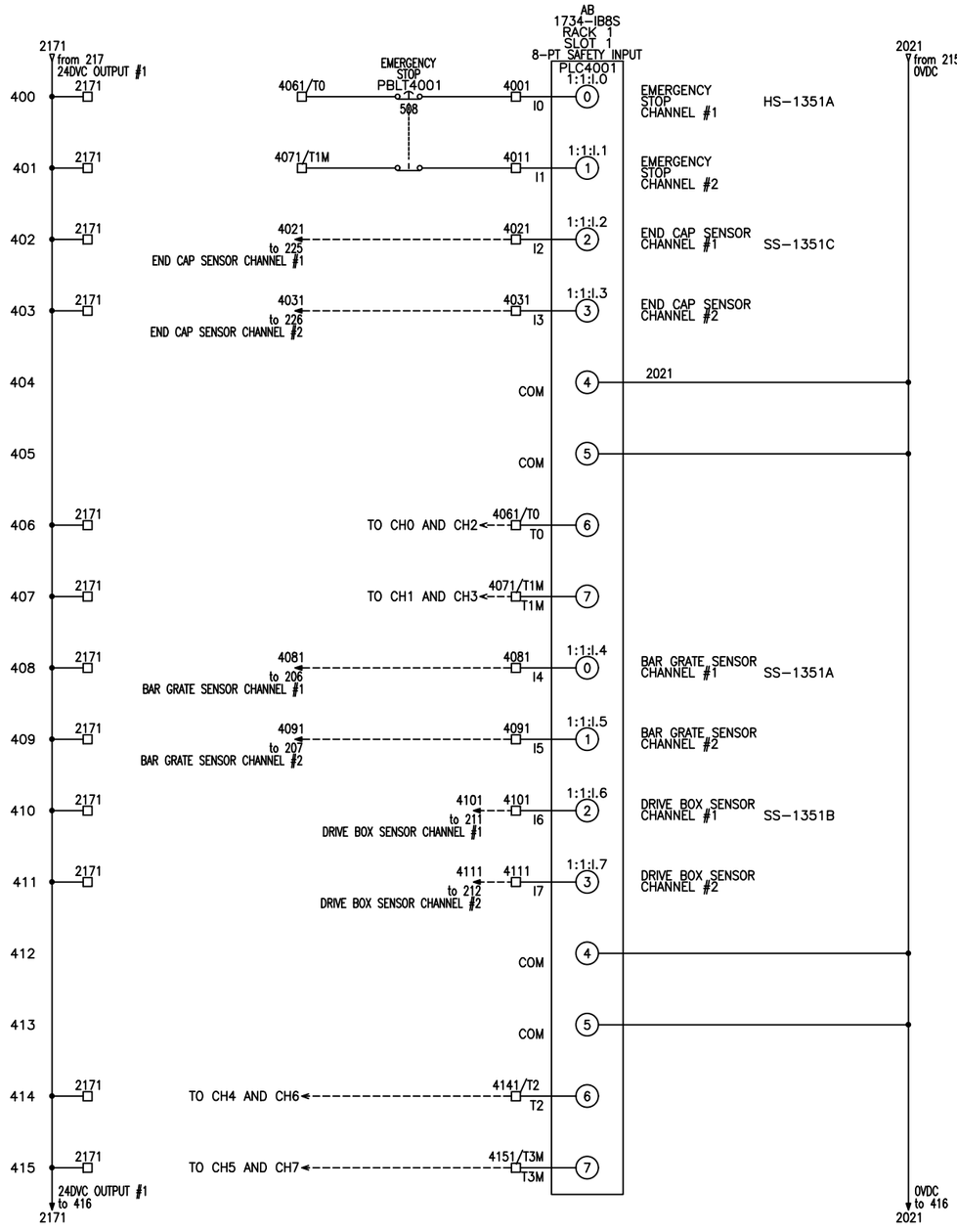

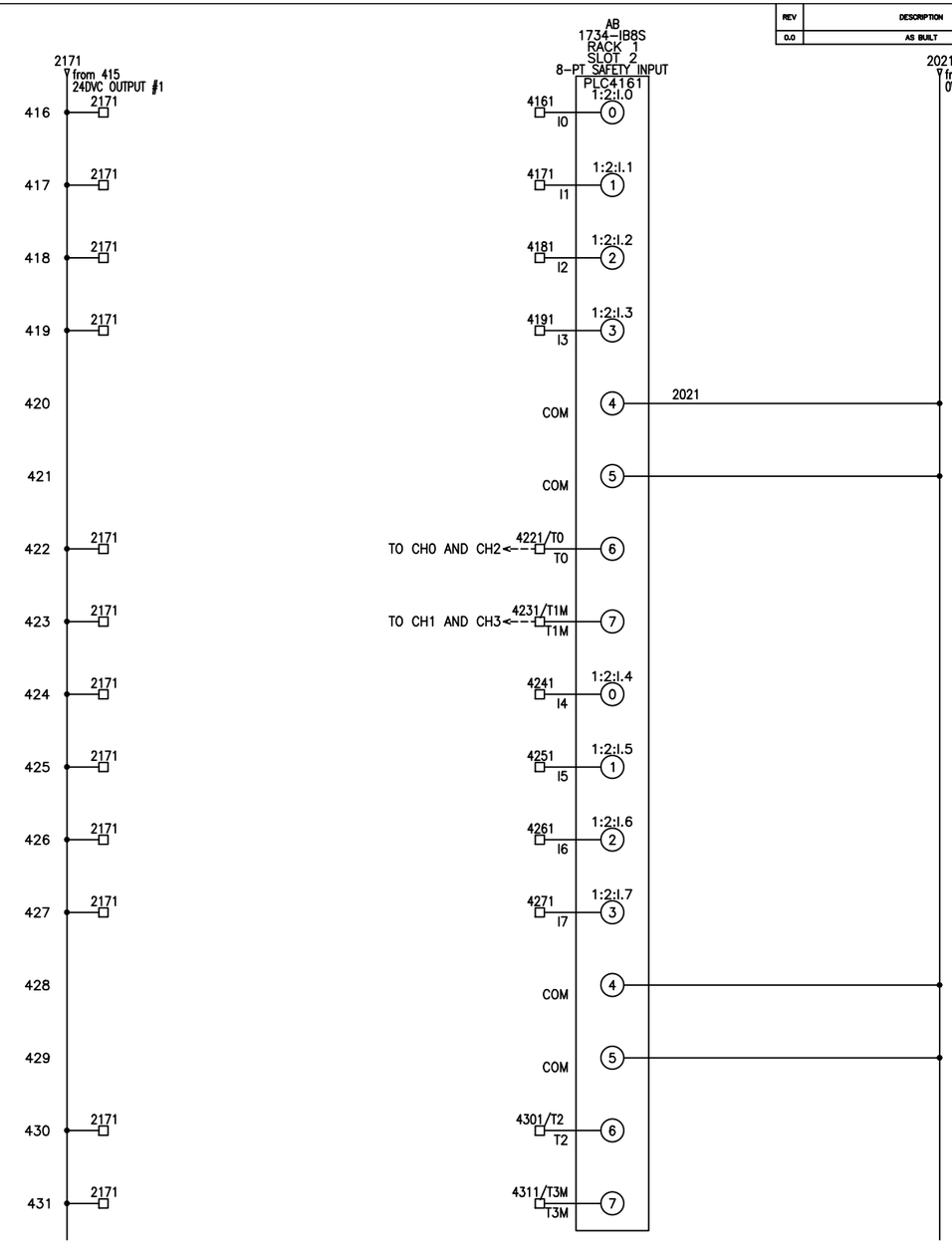

CONDUCTOR WIRE CODE

BLACK:	GREATER THAN 120VAC
RED:	120VAC OR LESS
WHITE:	GROUNDED AC LINE
BLUE:	UN GROUNDED VDC
WH/BLU:	GROUNDED VDC
GREEN:	GROUNDING CONDUCTORS
ORANGE:	CIRCUITS THAT REMAIN ENERGIZED WHEN MAIN DISC. IS "OFF"

WIRE GAUGE

MOTOR CIRCUITS:	MIN. 12 AWG
CONTROL CIRCUITS:	MIN. 16 AWG
PLC I/O:	MIN. 18 AWG
FUSES:	LINE/LOAD SIDE SHALL BE EQUAL AWG
RETURN/SUPPLY:	SHALL BE EQUAL AWG

LEGEND

--------	FIELD WIRING
————	PANEL WIRING

HAPMAN
ideas that move
5944 E. N AVE., KALAMAZOO, MICHIGAN 49048
PHONE (269) 343-1675 FAX (269) 349-2477

DATE 4/21/23	JOB NO. X20335-AC	DRAWN MRL	
SCALE N/A		BOM = 1	DWG = 1

TITLE

PLC WIRING DIAGRAM

TYPE 4X – HELIX CONVEYOR HI/LO

CUST. PROJECT SERVICES (FRITO LAY MODESTO)

SHEET 4 OF 16 | DWG. NO. X20335AC-B00 | REV. 0.0

REV	DESCRIPTION	DATE	BY
0.0	AS BUILT	6/29/23	MRL

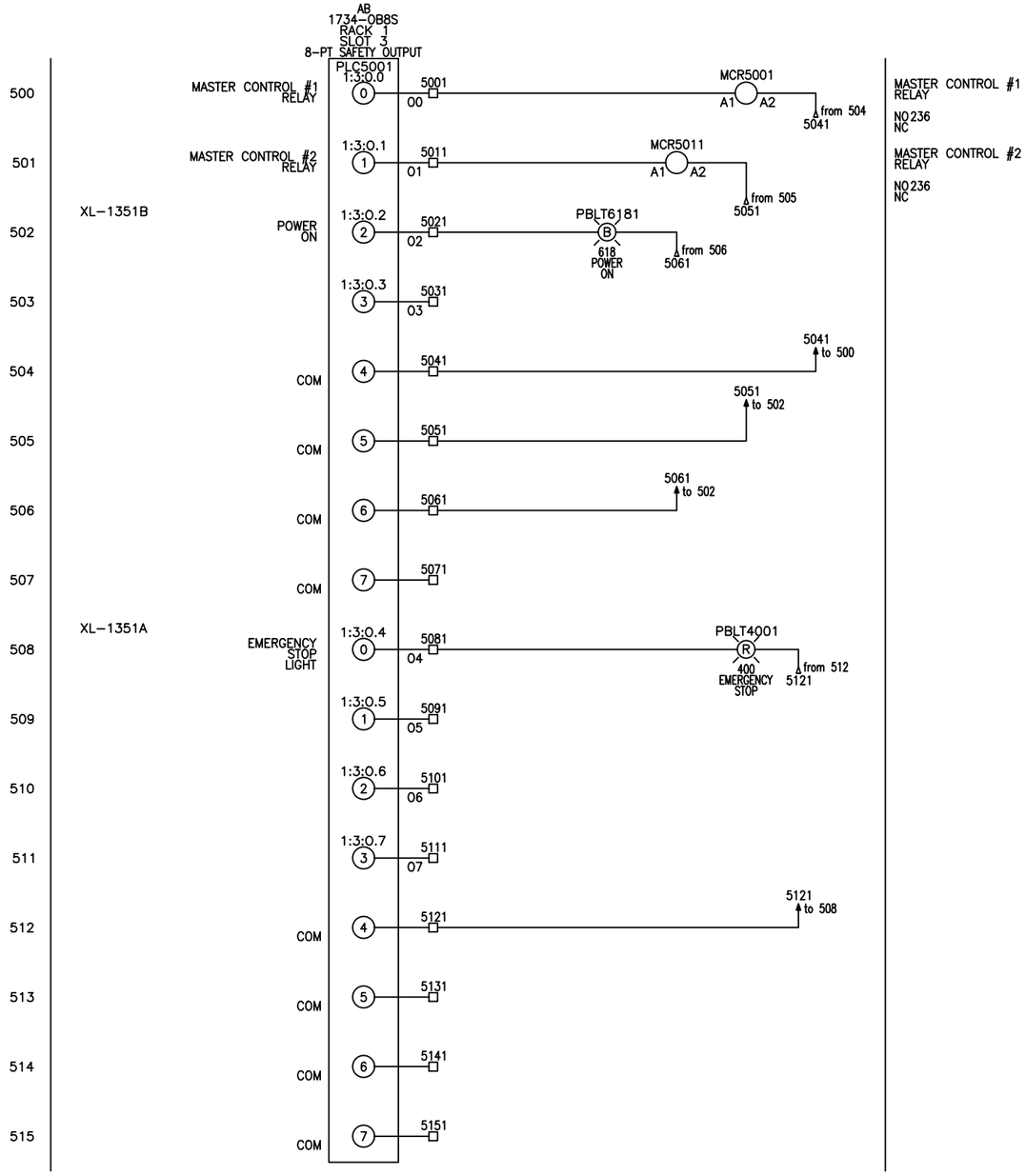

CONDUCTOR WIRE CODE

BLACK:	GREATER THAN 120VAC
RED:	120VAC OR LESS
WHITE:	GROUNDED AC LINE
BLUE:	UN GROUNDED VDC
WH/BLU:	GROUNDED VDC
GREEN:	GROUNDING CONDUCTORS
ORANGE:	CIRCUITS THAT REMAIN ENERGIZED WHEN MAIN DISC. IS "OFF"

WIRE GAUGE

MOTOR CIRCUITS:	MIN. 12 AWG
CONTROL CIRCUITS:	MIN. 16 AWG
PLC I/O:	MIN. 18 AWG
FUSES:	LINE/LOAD SIDE SHALL BE EQUAL AWG
RETURN/SUPPLY:	SHALL BE EQUAL AWG

LEGEND

--------	FIELD WIRING
————	PANEL WIRING

HAPMAN
ideas that move
5944 E. N AVE., KALAMAZOO, MICHIGAN 49048
PHONE (269) 343-1675 FAX (269) 349-2477

DATE 4/21/23	JOB NO. X20335-AC	DRAWN MRL	
SCALE N/A		BOM = 1	DWG = 1

TITLE

PLC WIRING DIAGRAM

TYPE 4X – HELIX CONVEYOR HI/LO

CUST. PROJECT SERVICES (FRITO LAY MODESTO)

SHEET 5 OF 16	DWG. NO. X20335AC-B00	REV. 0.0

REV	DESCRIPTION	DATE	BY
0.0	AS BUILT	6/29/23	MRL

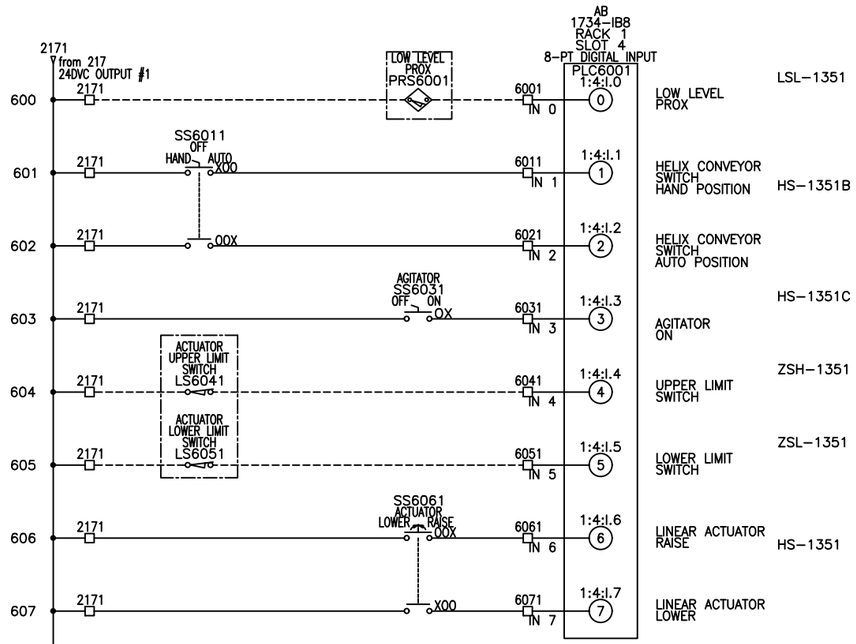

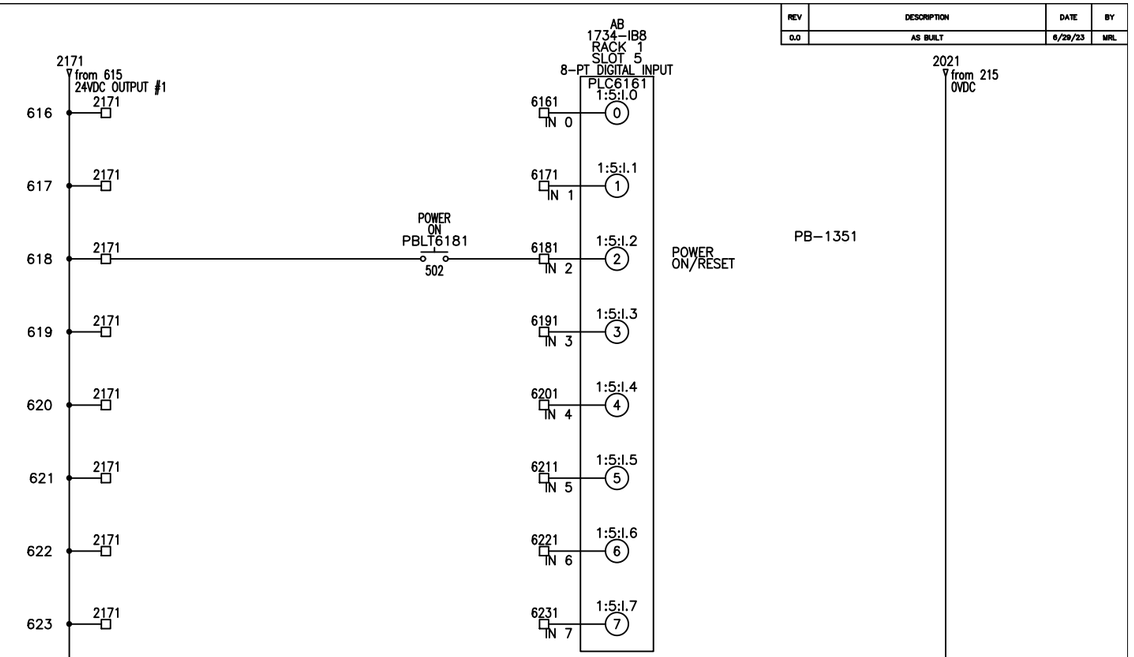

CONDUCTOR WIRE CODE

BLACK:	GREATER THAN 120VAC
RED:	120VAC OR LESS
WHITE:	GROUNDED AC LINE
BLUE:	UN GROUNDED VDC
WH/BLU:	GROUNDED VDC
GREEN:	GROUNDING CONDUCTORS
ORANGE:	CIRCUITS THAT REMAIN ENERGIZED WHEN MAIN DISC. IS "OFF"

WIRE GAUGE

MOTOR CIRCUITS:	MIN. 12 AWG
CONTROL CIRCUITS:	MIN. 16 AWG
PLC I/O:	MIN. 18 AWG
FUSES:	LINE/LOAD SIDE SHALL BE EQUAL AWG
RETURN/SUPPLY:	SHALL BE EQUAL AWG

LEGEND

--------	FIELD WIRING
————	PANEL WIRING

HAPMAN
ideas that move
5944 E. N AVE., KALAMAZOO, MICHIGAN 49048
PHONE (269) 343-1675 FAX (269) 349-2477

DATE 4/21/23	JOB NO. X20335-AC	DRAWN MRL	
SCALE N/A		BOM = 1	DWG = 1

TITLE

PLC WIRING DIAGRAM

TYPE 4X – HELIX CONVEYOR HI/LO

CUST. PROJECT SERVICES (FRITO LAY MODESTO)

SHEET 6 OF 16 | DWG. NO. X20335AC-B00 | REV. 0.0

REV	DESCRIPTION	DATE	BY
0.0	AS BUILT	6/29/23	MRL

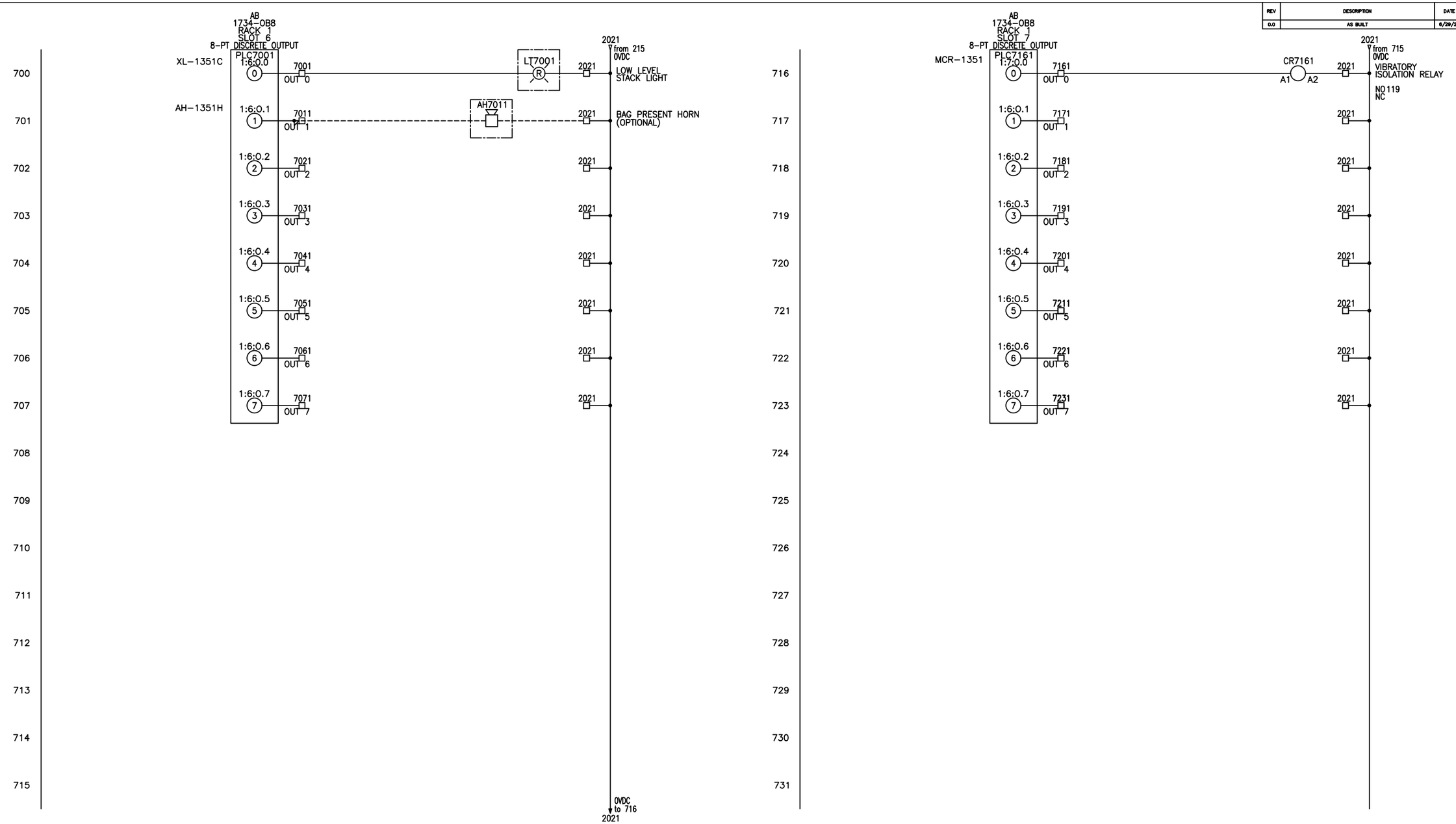

CONDUCTOR WIRE CODE

BLACK:	GREATER THAN 120VAC
RED:	120VAC OR LESS
WHITE:	GROUNDED AC LINE
BLUE:	UN GROUNDED VDC
WH/BLU:	GROUNDED VDC
GREEN:	GROUNDING CONDUCTORS
ORANGE:	CIRCUITS THAT REMAIN ENERGIZED WHEN MAIN DISC. IS "OFF"

WIRE GAUGE

MOTOR CIRCUITS:	MIN. 12 AWG
CONTROL CIRCUITS:	MIN. 16 AWG
PLC I/O:	MIN. 18 AWG
FUSES:	LINE/LOAD SIDE SHALL BE EQUAL AWG
RETURN/SUPPLY:	SHALL BE EQUAL AWG

LEGEND

--------	FIELD WIRING
————	PANEL WIRING

HAPMAN
ideas that move
5944 E. N AVE., KALAMAZOO, MICHIGAN 49048
PHONE (269) 343-1675 FAX (269) 349-2477

DATE 4/21/23	JOB NO. X20335-AC	DRAWN MRL	
SCALE N/A		BOM = 1	DWG = 1

TITLE

PLC WIRING DIAGRAM

TYPE 4X – HELIX CONVEYOR HI/LO

CUST. PROJECT SERVICES (FRITO LAY MODESTO)

SHEET 7 OF 16 | DWG. NO. X20335AC-B00 | REV. 0.0

REV	DESCRIPTION	DATE	BY
0.0	AS BUILT	6/29/23	MRL

800
801
802
803
804
805
806
807
808
809
810
811
812
813
814
815

816
817
818
819
820
821
822
823
824
825
826
827
828
829
830
831

CONDUCTOR WIRE CODE

BLACK:	GREATER THAN 120VAC
RED:	120VAC OR LESS
WHITE:	GROUNDED AC LINE
BLUE:	UN GROUNDED VDC
WH/BLU:	GROUNDED VDC
GREEN:	GROUNDING CONDUCTORS
ORANGE:	CIRCUITS THAT REMAIN ENERGIZED WHEN MAIN DISC. IS "OFF"

WIRE GAUGE

MOTOR CIRCUITS:	MIN. 12 AWG
CONTROL CIRCUITS:	MIN. 16 AWG
PLC I/O:	MIN. 18 AWG
FUSES:	LINE/LOAD SIDE SHALL BE EQUAL AWG
RETURN/SUPPLY:	SHALL BE EQUAL AWG

LEGEND

--------	FIELD WIRING
————	PANEL WIRING

HAPMAN
ideas that move
5944 E. N AVE., KALAMAZOO, MICHIGAN 49048
PHONE (269) 343-1675 FAX (269) 349-2477

DATE 4/21/23	JOB NO. X20335-AC	DRAWN MRL	
SCALE N/A		BOM = 1	DWG = 1

TITLE
RESERVED
TYPE 4X – HELIX CONVEYOR HI/LO

CUST. PROJECT SERVICES (FRITO LAY MODESTO)

SHEET 8 OF 16 | DWG. NO. X20335AC-B00 | REV. 0.0

REV	DESCRIPTION	DATE	BY
0.0	AS BUILT	6/29/23	MRL

900
901
902
903
904
905
906
907
908
909
910
911
912
913
914
915

916
917
918
919
920
921
922
923
924
925
926
927
928
929
930
931

CONDUCTOR WIRE CODE

BLACK:	GREATER THAN 120VAC
RED:	120VAC OR LESS
WHITE:	GROUNDED AC LINE
BLUE:	UN GROUNDED VDC
WH/BLU:	GROUNDED VDC
GREEN:	GROUNDING CONDUCTORS
ORANGE:	CIRCUITS THAT REMAIN ENERGIZED WHEN MAIN DISC. IS "OFF"

WIRE GAUGE

MOTOR CIRCUITS:	MIN. 12 AWG
CONTROL CIRCUITS:	MIN. 16 AWG
PLC I/O:	MIN. 18 AWG
FUSES:	LINE/LOAD SIDE SHALL BE EQUAL AWG
RETURN/SUPPLY:	SHALL BE EQUAL AWG

LEGEND

--------	FIELD WIRING
————	PANEL WIRING

HAPMAN
ideas that move
5944 E. N AVE., KALAMAZOO, MICHIGAN 49048
PHONE (269) 343-1675 FAX (269) 349-2477

DATE 4/21/23	JOB NO. X20335-AC	DRAWN MRL	
SCALE N/A		BOM = 1	DWG = 1

TITLE
RESERVED
TYPE 4X – HELIX CONVEYOR HI/LO

CUST. PROJECT SERVICES (FRITO LAY MODESTO)

SHEET 9 OF 16 | DWG. NO. X20335AC-B00 | REV. 0.0

REV	DESCRIPTION	DATE	BY
0.0	AS BUILT	6/29/23	MRL

1000
1001
1002
1003
1004
1005
1006
1007
1008
1009
1010
1011
1012
1013
1014
1015

1016
1017
1018
1019
1020
1021
1022
1023
1024
1025
1026
1027
1028
1029
1030
1031

CONDUCTOR WIRE CODE

BLACK:	GREATER THAN 120VAC
RED:	120VAC OR LESS
WHITE:	GROUNDED AC LINE
BLUE:	UN GROUNDED VDC
WH/BLU:	GROUNDED VDC
GREEN:	GROUNDING CONDUCTORS
ORANGE:	CIRCUITS THAT REMAIN ENERGIZED WHEN MAIN DISC. IS "OFF"

WIRE GAUGE

MOTOR CIRCUITS:	MIN. 12 AWG
CONTROL CIRCUITS:	MIN. 16 AWG
PLC I/O:	MIN. 18 AWG
FUSES:	LINE/LOAD SIDE SHALL BE EQUAL AWG
RETURN/SUPPLY:	SHALL BE EQUAL AWG

LEGEND

--------	FIELD WIRING
————	PANEL WIRING

HAPMAN
ideas that move
5944 E. N AVE., KALAMAZOO, MICHIGAN 49048
PHONE (269) 343-1675 FAX (269) 349-2477

DATE 4/21/23	JOB NO. X20335-AC	DRAWN MRL	
SCALE N/A		BOM = 1	DWG = 1

TITLE
RESERVED
TYPE 4X – HELIX CONVEYOR HI/LO

CUST. PROJECT SERVICES (FRITO LAY MODESTO)

SHEET 10 OF 16 | DWG. NO. X20335AC-B00 | REV. 0.0

REV	DESCRIPTION	DATE	BY
0.0	AS BUILT	6/29/23	MRL

1100
1101
1102
1103
1104
1105
1106
1107
1108
1109
1110
1111
1112
1113
1114
1115
1116
1117
1118
1119
1120
1121
1122
1123
1124
1125
1126
1127
1128
1129
1130
1131

CONDUCTOR WIRE CODE

BLACK:	GREATER THAN 120VAC
RED:	120VAC OR LESS
WHITE:	GROUNDED AC LINE
BLUE:	UN GROUNDED VDC
WH/BLU:	GROUNDED VDC
GREEN:	GROUNDING CONDUCTORS
ORANGE:	CIRCUITS THAT REMAIN ENERGIZED WHEN MAIN DISC. IS "OFF"

WIRE GAUGE

MOTOR CIRCUITS:	MIN. 12 AWG
CONTROL CIRCUITS:	MIN. 16 AWG
PLC I/O:	MIN. 18 AWG
FUSES:	LINE/LOAD SIDE SHALL BE EQUAL AWG
RETURN/SUPPLY:	SHALL BE EQUAL AWG

LEGEND

--------	FIELD WIRING
————	PANEL WIRING

HAPMAN
ideas that move
5944 E. N AVE., KALAMAZOO, MICHIGAN 49048
PHONE (269) 343-1675 FAX (269) 349-2477

DATE 4/21/23	JOB NO. X20335-AC	DRAWN MRL	
SCALE N/A		BOM = 1	DWG = 1

TITLE
RESERVED
TYPE 4X – HELIX CONVEYOR HI/LO

CUST. PROJECT SERVICES (FRITO LAY MODESTO)

SHEET 11 OF 16 | DWG. NO. X20335AC-B00 | REV. 0.0

REV	DESCRIPTION	DATE	BY
0.0	AS BUILT	6/29/23	MRL

1200
1201
1202
1203
1204
1205
1206
1207
1208
1209
1210
1211
1212
1213
1214
1215
1216
1217
1218
1219
1220
1221
1222
1223
1224
1225
1226
1227
1228
1229
1230
1231

CONDUCTOR WIRE CODE

BLACK:	GREATER THAN 120VAC
RED:	120VAC OR LESS
WHITE:	GROUNDED AC LINE
BLUE:	UN GROUNDED VDC
WH/BLU:	GROUNDED VDC
GREEN:	GROUNDING CONDUCTORS
ORANGE:	CIRCUITS THAT REMAIN ENERGIZED WHEN MAIN DISC. IS "OFF"

WIRE GAUGE

MOTOR CIRCUITS:	MIN. 12 AWG
CONTROL CIRCUITS:	MIN. 16 AWG
PLC I/O:	MIN. 18 AWG
FUSES:	LINE/LOAD SIDE SHALL BE EQUAL AWG
RETURN/SUPPLY:	SHALL BE EQUAL AWG

LEGEND

--------	FIELD WIRING
————	PANEL WIRING

HAPMAN
ideas that move
5944 E. N AVE., KALAMAZOO, MICHIGAN 49048
PHONE (269) 343-1675 FAX (269) 349-2477

DATE 4/21/23	JOB NO. X20335-AC	DRAWN MRL	
SCALE N/A		BOM = 1	DWG = 1

TITLE
RESERVED
TYPE 4X – HELIX CONVEYOR HI/LO

CUST. PROJECT SERVICES (FRITO LAY MODESTO)

SHEET 12 OF 16 | DWG. NO. X20335AC-B00 | REV. 0.0

REV	DESCRIPTION	DATE	BY
0.0	AS BUILT	6/29/23	MRL

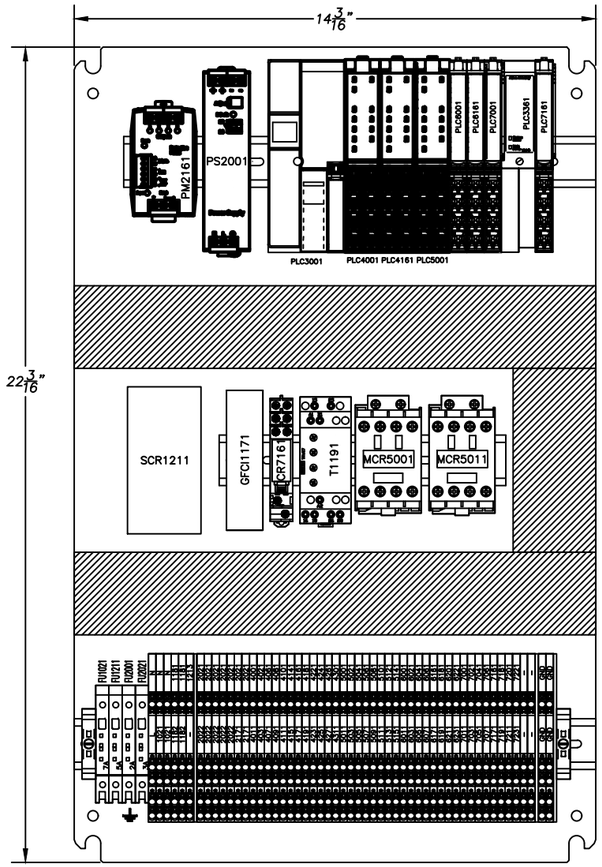

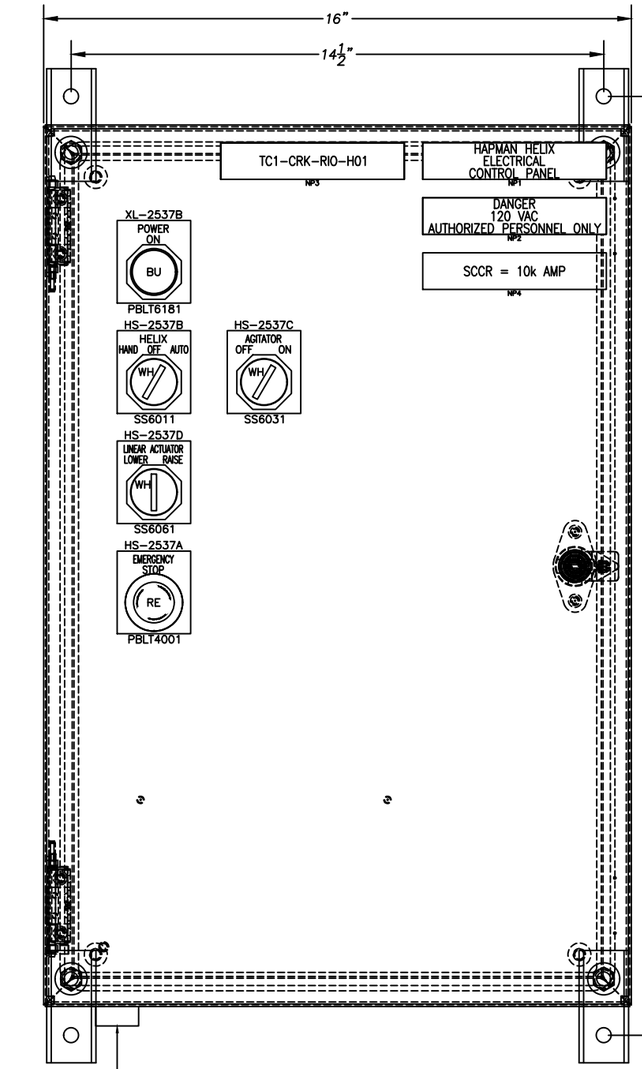

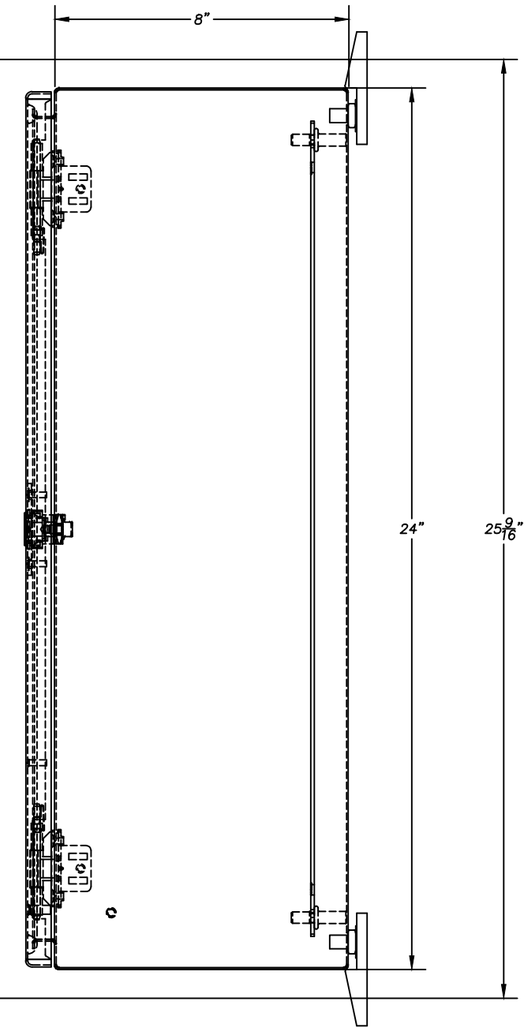

HELIX CONVEYOR
HOPPER LOW LEVEL LIGHT

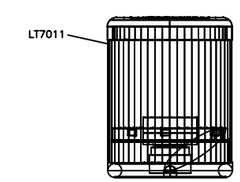

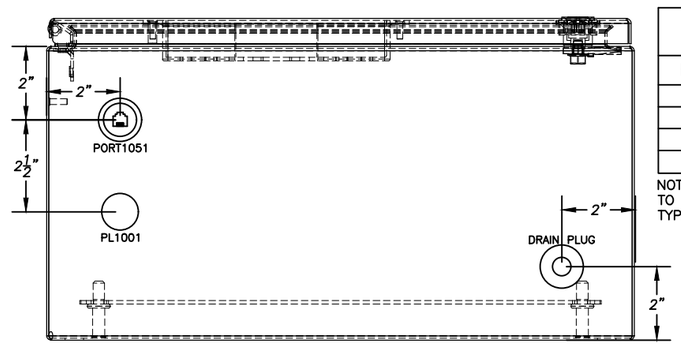

PIN/PLUG CONNECTIONS BY OTHERS

NAMEPLATE DESCRIPTIONS			
N.P. #	LINE 1	LINE 2	LINE 3
NP1	HAPMAN HELIX	ELECTRICAL	CONTROL PANEL
NP2	DANGER	120 VAC	AUTHORIZED PERSONNEL ONLY
NP3	TC1-CRK-RIO-H01		
NP4	SCCR = 10k AMPS		

NOTES:
1. NP1 SHALL BE 1"x5" LAMINATED 1/16" MICARTA "GRAVIPLY" WHITE FRONT WITH 1/4" HIGH ENGRAVED BLACK LETTERS.
2. NP2 SHALL BE 1"x5" LAMINATED 1/16" MICARTA "GRAVIPLY" RED FRONT WITH 1/4" HIGH ENGRAVED WHITE LETTERS.
3. NP3-NP4 SHALL BE 1"X5" LAMINATED 1/16" MICARTA "GRAVIPLY" WHITE FRONT
WITH 1/4" HIGH ENGRAVED BLACK LETTERS.
4. ALL OTHER NAMEPLATES SHALL BE 3/4"x2" WHITE FRONT WITH BLACK LETTERS

FUSE REPLACEMENT			
FUSE #	TYPE/SIZE	AMPERAGE	VOLTAGE
FU1021	MDL-7-R	7A	250VAC
FU1211	MDL-5-R	5A	250VAC
FU2001	MDL-2-R	2A	250VAC
FU2021	ABC-3-R	3A	250VAC/125VDC

NOTE:
TO REDUCE THE RISK OF FIRE – REPLACE ONLY WITH THE SAME TYPE AND RATING OF FUSE IN THE FUSE REPLACEMENT CHART.

VOLTAGE:	120 VOLT
PHASE & FREQ.:	1PH., 60HZ
FULL LOAD CURRENT:	2 AMP
LARGEST MOTOR FLA:	1 AMP
S.C.C.R.:	10k AMP
ENCLOSURE RATING:	TYPE 4X
SCHEMATIC:	X20335AC-B00 (MAIN PANEL)
MFG. BY:	KMC Global Controls & Automation
UL FILE NUMBER:	E500032

HAPMAN
ideas that move
5944 E. N AVE., KALAMAZOO, MICHIGAN 49048
PHONE (269) 343-1675 FAX (269) 349-2477

DATE 4/21/23	JOB NO. X20335-AC	DRAWN MRL	
SCALE N/A		BOM = 1	DWG = 1

TITLE
MAIN PANEL LAYOUT
TYPE 4X – HELIX CONVEYOR HI/LO

CUST. PROJECT SERVICES (FRITO LAY MODESTO)

SHEET 13 OF 16 | DWG. NO. X20335AC-B00 | REV. 0.0

REV	DESCRIPTION	DATE	BY
0.0	AS BUILT	6/29/23	MRL

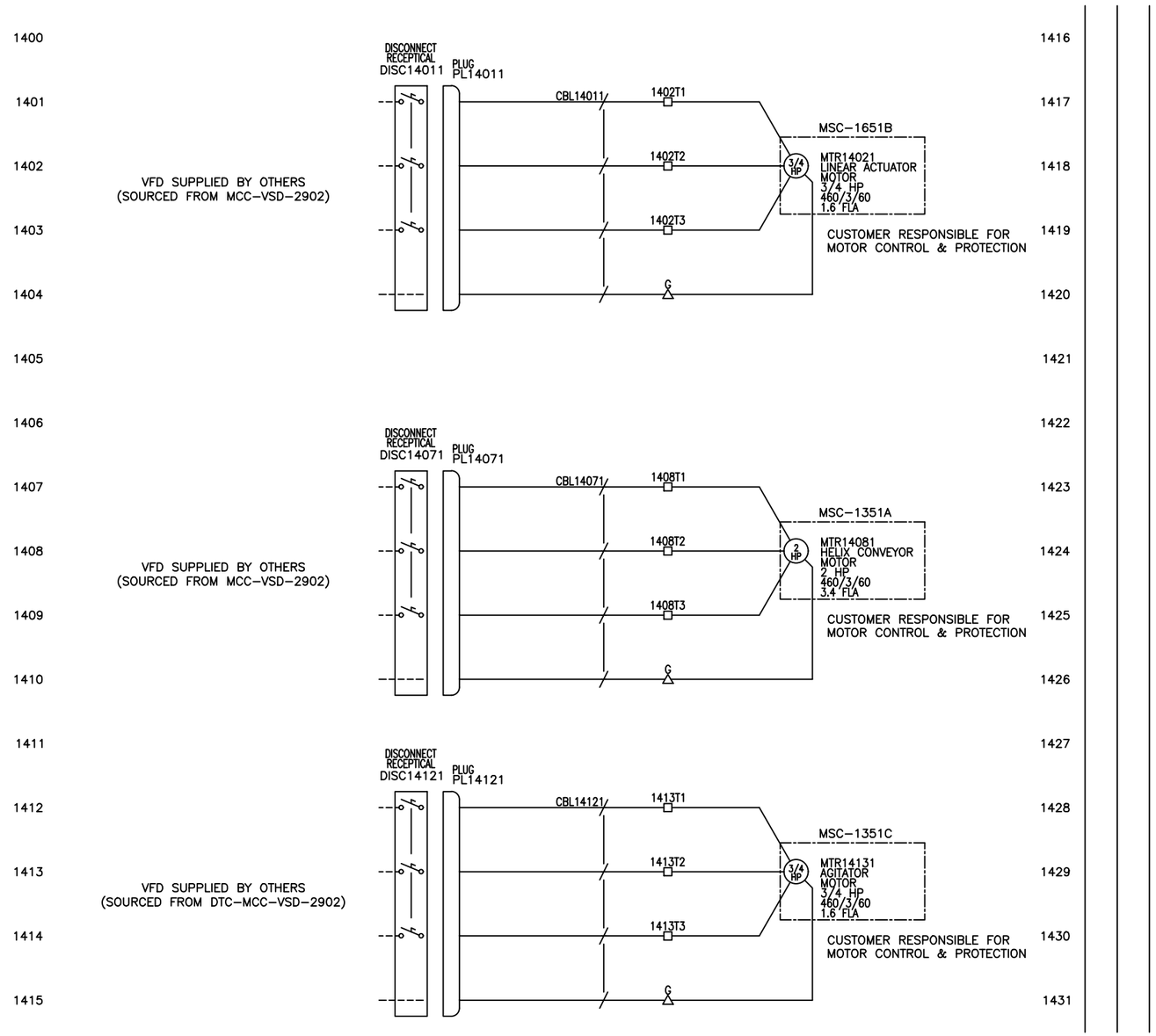

CONDUCTOR WIRE CODE

BLACK:	GREATER THAN 120VAC
RED:	120VAC OR LESS
WHITE:	GROUNDED AC LINE
BLUE:	UN GROUNDED VDC
WH/BLU:	GROUNDED VDC
GREEN:	GROUNDING CONDUCTORS
ORANGE:	CIRCUITS THAT REMAIN ENERGIZED WHEN MAIN DISC. IS "OFF"

WIRE GAUGE

MOTOR CIRCUITS:	MIN. 12 AWG
CONTROL CIRCUITS:	MIN. 16 AWG
PLC I/O:	MIN. 18 AWG
FUSES:	LINE/LOAD SIDE SHALL BE EQUAL AWG
RETURN/SUPPLY:	SHALL BE EQUAL AWG

LEGEND

--------	FIELD WIRING
————	PANEL WIRING

HAPMAN
ideas that move
5944 E. N AVE., KALAMAZOO, MICHIGAN 49048
PHONE (269) 343-1675 FAX (269) 349-2477

DATE 4/21/23	JOB NO. X20335-AC	DRAWN MRL	
SCALE N/A		BOM = 1	DWG = 1

TITLE
MOTOR JUNCTION BOX WIRING DIAGRAM
TYPE 4X – HELIX CONVEYOR HI/LO

CUST. PROJECT SERVICES (FRITO LAY MODESTO)

SHEET	DWG. NO.	REV.
14 OF 16	X20335AC-B00	0.0

REV	DESCRIPTION	DATE	BY
0.0	AS BUILT	6/29/23	MRL

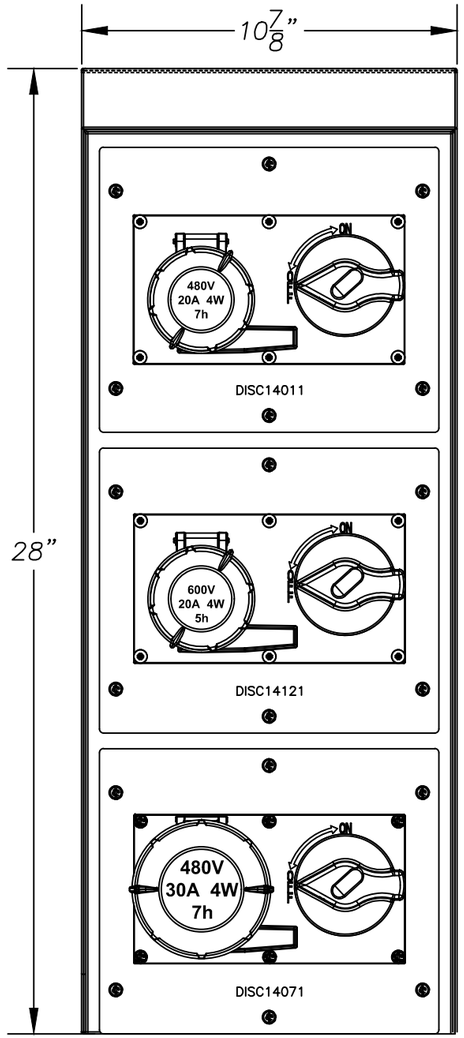

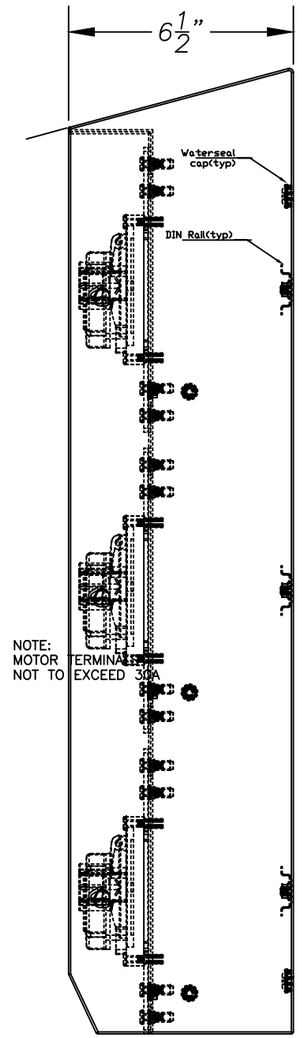

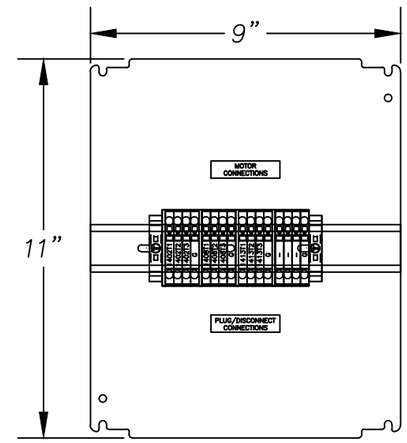

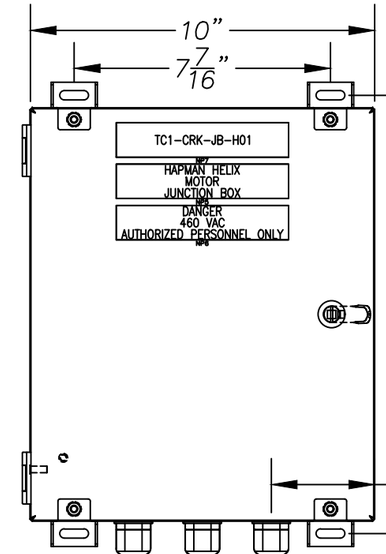

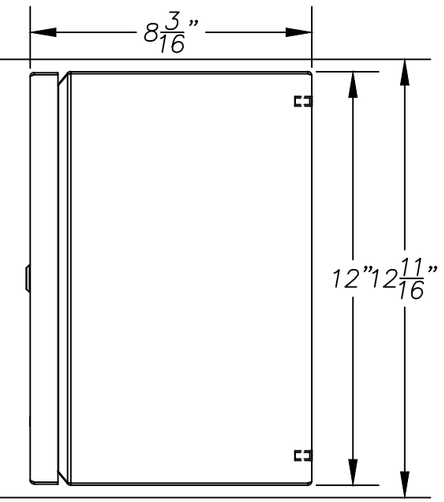

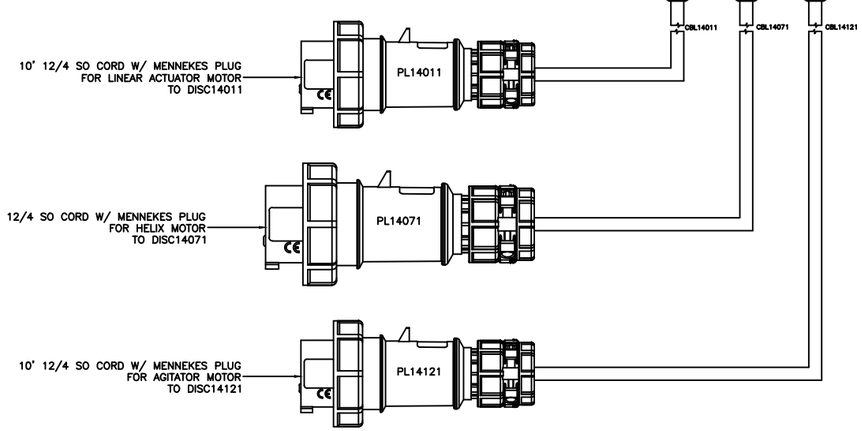

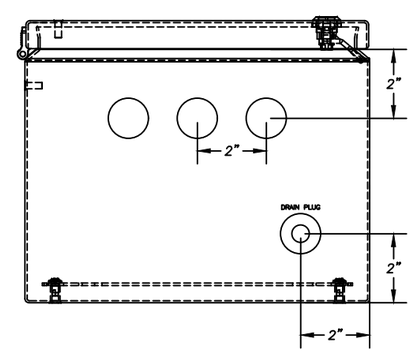

NAMEPLATE DESCRIPTIONS			
N.P. #	LINE 1	LINE 2	LINE 3
NP5	HAPMAN HELIX	MOTOR	JUNCTION BOX
NP6	DANGER	460 VAC	AUTHORIZED PERSONNEL ONLY
NP7	TC1-CRK-JB-H01		

NOTES:
1. NP5 SHALL BE 1"x5" LAMINATED 1/16" MICARTA "GRAVIPLY" WHITE FRONT WITH 1/4" HIGH ENGRAVED BLACK LETTERS.
2. NP6 SHALL BE 1"x5" LAMINATED 1/16" MICARTA "GRAVIPLY" RED FRONT WITH 1/4" HIGH ENGRAVED WHITE LETTERS.
3. NP7 SHALL BE 1"X5" LAMINATED 1/16" MICARTA "GRAVIPLY" WHITE FRONT WITH 1/4" HIGH ENGRAVED BLACK LETTERS.
4. ALL OTHER NAMEPLATES SHALL BE 3/4"x2" WHITE FRONT WITH BLACK LETTERS

(MOTOR JUNCTION BOX)	
VOLTAGE:	460 VOLT
PHASE & FREQ.:	3PH., 60HZ
ENCLOSURE RATING:	TYPE 4X
SCHEMATIC:	X20335AC-B00
MFG. BY:	KMC Global Controls & Automation
UL FILE NUMBER	E500032

HAPMAN
ideas that move
5944 E. N AVE., KALAMAZOO, MICHIGAN 49048
PHONE (269) 343-1675 FAX (269) 349-2477

DATE 4/21/23	JOB NO. X20335-AC	DRAWN MRL	
SCALE N/A		BOM = 1	DWG = 1

TITLE
MOTOR JUNCTION BOX
TYPE 4X – HELIX CONVEYOR HI/LO

CUST. PROJECT SERVICES (FRITO LAY MODESTO)

SHEET 15 OF 16 | DWG. NO. X20335AC-B00 | REV. 0.0

REV	DESCRIPTION	DATE	BY
0.0	AS BUILT	6/29/23	MRL

ITEM	QTY	PART #	MANUFACTURE	DESCRIPTION	DESCRIPTOR
1	1	CSD24168SS	HOFFMAN	24"x16"x8" TYPE 4X STAINLESS STEEL ENCLOSURE	MAIN PANEL
2	1	CP2416	HOFFMAN	SUB PANEL	.
3	1	CMFKSS	HOFFMAN	TYPE 4X STAINLESS STEEL FOOT KIT	.
4	1	IAEBHC6	PANDUIT	PROG. PORT, RJ45 CAT6	PORT1051
5	1	576-S10-004	QUIKTRON	4' SHIELDED CAT6 ETHERNET CABLE	ENET-3041
6	4	1492-H6	AB	300V 12A FUSIBLE TERMINAL BLOCK #30-#12AWG	FU1021,1211,2001,2021
7	1	1492-N37	AB	FUSIBLE TERMINAL END BARRIER	FU1021-2021
8	1	MDL-7-R	BUSSMANN	7A 1/4"x1-1/4" TIME-DELAY GLASS FUSE	FU1021
9	1	MDL-5-R	BUSSMANN	5A 1/4"x1-1/4" TIME-DELAY GLASS FUSE	FU1211
10	1	MDL-2-R	BUSSMANN	2A 1/4"x1-1/4" TIME-DELAY GLASS FUSE	FU2001
11	1	ABC-3-R	BUSSMANN	3A 1/4"x1-1/4" FAST-ACTING CERAMIC FUSE	FU2021
12	1	1492-MCGAT115	AB	15A 1 POLE GFCI CIRCUIT BREAKER	GFCI1171
13	1	1492-AMCDIN1	AB	GFCI CIRCUIT BREAKER DIN CLIP	GFCI1171
14	1	TRW27	EATON	24-240 VAC/DC MULTI-FUNCTION DPDT TIMER	T1191
15	1	179502-A	FMC	115/60/1 SCR	SCR1211
16	1	4SSL1/2DR	APPLETON	2"x4"x2-1/8" HANDYBOX	SCR1211
17	1	180A	APPLETON	4-1/8"x2-3/8" HANDYBOX COVER	SCR1211
18	1	PIM60.245	PULS	24VDC 2.5A NEC CLASS2 COMPLAINT POWER SUPPLY	PS2001
19	1	PISA11.CLASS2	PULS	24VDC 14.8A PROTECTION MODULE	PM2161
20	1	1734-AENT	AB	POINT I/O ETHERNET ADAPTER	PLC3001
21	1	1734-FPD	AB	POINT I/O FIELD POTENTIAL DISTRIBUTOR MODULE	PLC3361
22	1	1734-IB8S	AB	8 POINT SAFETY SINKING INPUT CARD	PLC4001
23	1	1734-OB8S	AB	8 POINT SAFETY SOURCING OUTPUT CARD	PLC5001
24	2	1734-IB8	AB	POINT I/O 8PT DIGITAL INPUT CARD	PLC6001,6161
25	2	1734-OB8	AB	POINT I/O 8PT DIGITAL OUTPUT CARD	PLC7001,7161
26	10	1734-TBS	AB	POINT I/O SPRING TERMINAL BASE	PLC4001-7161
27	1	800H-FRXTQH2RA	AB	30mm 12-130VAC/DC RED ILLUMINATED PUSH/PULL MUSH HEAD PB	PBLT4001
28	1	800T-XA4	AB	30mm 2 N.C. CONTACT BLOCK	PBLT4001
29	5	CT-SPECIAL	CT	30mm LEGEND CUSTOM TEXT (SEE DRAWING)	PBLT4001,6181,SS6011-6181
30	2	700-CF400EJ	AB	24VDC CONTROL RELAY WITH 4 N.O. CONTACTS	MCR5001,5011
31	1	800H-JR2A	AB	30mm 3 POSITION MAINTAINED SELECTOR SWITCH	SS6011
32	1	800H-HR2D1	AB	30mm 2 POSITION MAINTAINED SELECTOR SWITCH	SS6031
33	1	800H-JR91A	AB	3 POS. SPRING RETURN SELECTOR SWITCH W/ 1 N.O. & 1 N.C. CONTATCS	SS6061
34	1	800H-QRBH2B	AB	30mm 12-130VAC/DC BLUE ILLUM. FLUSH HEAD PB W/ 1 N.O. & 1 N.C. CONTACT	PBLT6181
35	1	700-HK32Z24	AB	24VDC DPDT SLIM RELAY CUBE	CR7001
36	1	700-HN222	AB	DPDT SLIM RELAY SOCKET	CR7001
37	48	3210609	PHOENIX	5.2mm DOUBLE STACK PUSH IN TERMINAL	.
38	2	3210611	PHOENIX	5.2mm DOUBLE STACK PUSH IN GROUND TERMINAL	.
39	3	3210613	PHOENIX	END PLATE FOR 5.2mm DOUBLE STACK PUSH IN TERMINAL	.
40	2	0800886	PHOENIX	SCREW ON END STOP	.
41	2'	111023	E-RAIL	35mm DIN RAIL	.
42	4'	F2X4LG6	PANDUIT	2"x4" WIREWAY	.
43	4'	C2LG6	PANDUIT	2" WIREWAY COVER	.
44	4	JPPT4A	CT	1"x5" CUSTOM ENGRAVED LEGEND	NP1-4
45	1	SSTC 1CD	CROUSE-HINDS	DRAIN PULG, 1/2" STAINLESS STEEL	.
46	1	212PA	MENCOM	1/2" NPT LOCKNUT	.
47	1	PPS0305W2100	PANDUIT	ARC FLASH LABEL	.
48					
49					
50					
51					
52					
53					
54					
55					
56					

ITEM	QTY	PART #	MANUFACTURE	DESCRIPTION	DESCRIPTOR
57	1	888N-M4AF1-1F	AB	4 PIN 600V, 10A, 16 AWG MALE RECEPTACLE 1' LEAD	PL1001
58	1	889N-F4AFC-12F	AB	4 PIN 600V, 10A, FEMALE QUICK CHANGE CONNECTOR W/ 12' LEAD	RECEP1001 (SHIP LOOSE)
59	REF	855T-B24TL4	ALLEN BRADLEY	24VDC STEADY LED TOWER LIGHT- (AB), RED	LT7011
60	REF	855T-BCBC	ALLEN BRADLEY	SURFACE MOUNT BASE- (AB), W/CAP, 1/2 NPT	LT7011
61					
62					
63	1	12108ELJSS	SCE	12"x10"x8" TYPE 4X STAINLESS STEEL ENCLOSURE	MOTOR JUNCTION BOX
64	1	12P10	SCE	SUB PANEL	.
65	12	3211757	PHOENIX	6.2mm 30A PUSH IN TERMINAL	.
66	4	3211766	PHOENIX	6.2mm PUSH IN GROUND TERMINAL	.
67	4	3030420	PHOENIX	END COVER FOR 6.2mm PUSH IN TERMINAL	.
68	2	0800886	PHOENIX	SCREW ON END STOP	.
69	1'	111023	E-RAIL	35mm DIN RAIL	.
70	3	SHC1036	HUBBELL	3/4" NPT MACHINED ALUMINUM CORD GRIP (0.5-0.63")	CBL14011,14071,14121
71	3	20509002	HUBBELL	3/4" NPT METAL CLAD SEALING O-RING	CBL14011,14071,14121
72	3	234PA	MENCOM	3/4" NPT LOCKNUT	CBL14011,14071,14121
73	33'	12/4 SO CORD	CAROL	12/4 SO CORD	CBL14011,14071,14121
74	1	ME420P7W	MENNEKES	20A 3P 4W 480V WATERTIGHT PLUG	PL14011
75	1	ME430P7W	MENNEKES	30A 3P 4W 480V WATERTIGHT PLUG	PL14071
76	1	ME420P5W	MENNEKES	20A 3P 4W 600V WATERTIGHT PLUG	PL14121
77	1	SPX3A-639068	MENNEKES	AMAXX STAINLESS STEEL 3 POSITION INTERLOCKED RECEPTACLE	DISC14011,14071,14121
78	3	JPPT4A	CT	1"x5" CUSTOM ENGRAVED LEGEND	NP5-7
79	1	SSTC 1CD	CROUSE-HINDS	DRAIN PULG, 1/2" STAINLESS STEEL	.
80	1	212PA	MENCOM	1/2" NPT LOCKNUT	.
81	1	PPS0305W2100	PANDUIT	ARC FLASH LABEL	.
82	1	31622003L	HUBBELL	1/2" NPT LOCKING NUT	.
83					
84					
85					
86					
87					
88					
89					
90					
91					
92					
93					
94					
95					
96					
97					
98					
99					
100					
101					
102					
103					
104					
105					

HAPMAN
ideas that move
5944 E. N AVE., KALAMAZOO, MICHIGAN 49048
PHONE (269) 343-1675 FAX (269) 349-2477

DATE 4/21/23	JOB NO. X20335-AC	DRAWN MRL	
SCALE N/A		BOM = 1	DWG = 1

TITLE

BILL OF MATERIALS

TYPE 4X - HELIX CONVEYOR HI/LO

CUST. PROJECT SERVICES (FRITO LAY MODESTO)

SHEET 16 OF 16 | DWG. NO. X20335AC-B00 | REV. 0.0

REV	DESCRIPTION	DATE	BY
0.0	AS BUILT	6/29/23	MRL

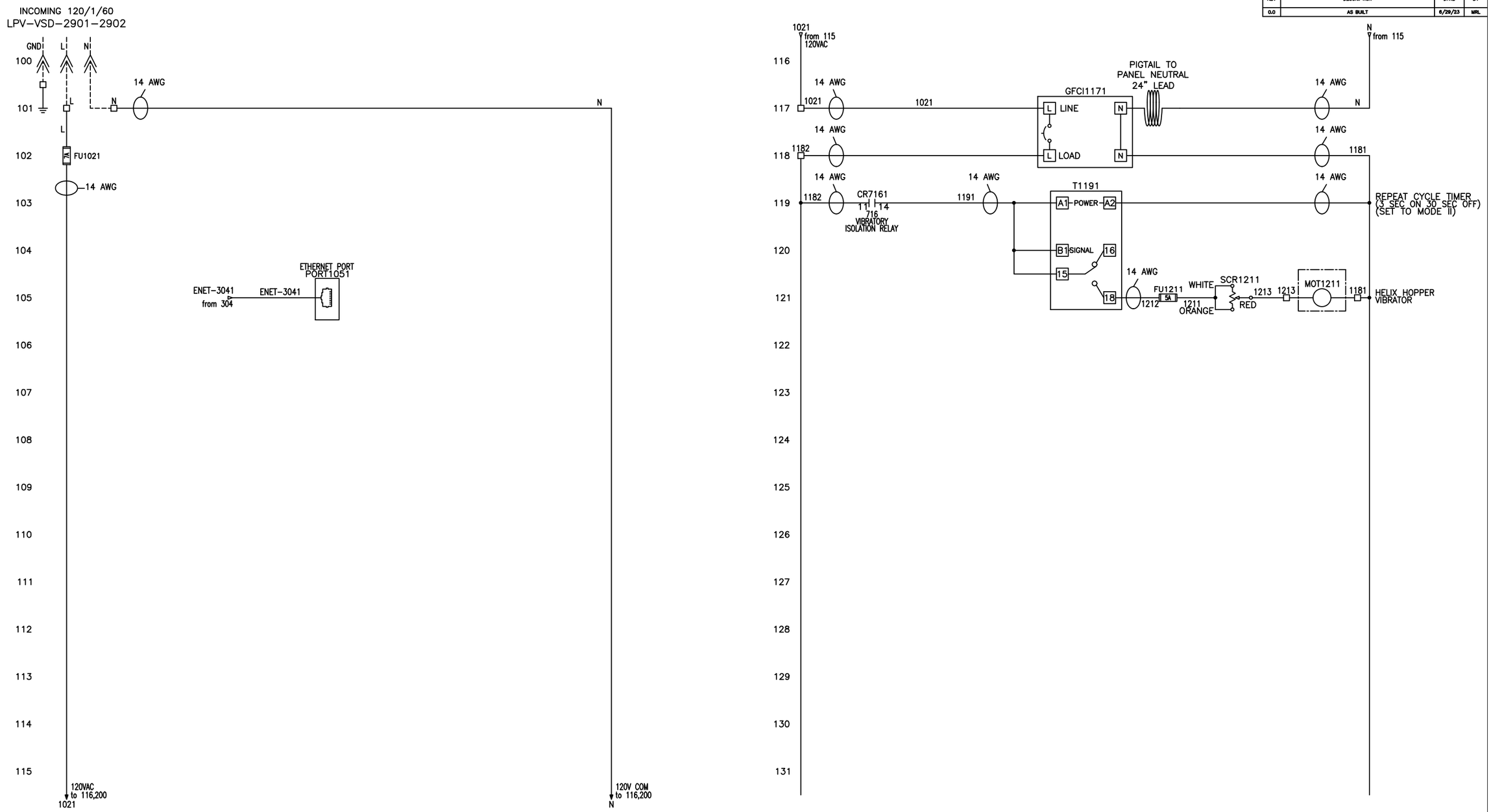

CONDUCTOR WIRE CODE

BLACK:	GREATER THAN 120VAC
RED:	120VAC OR LESS
WHITE:	GROUNDED AC LINE
BLUE:	UN GROUNDED VDC
WH/BLU:	GROUNDED VDC
GREEN:	GROUNDING CONDUCTORS
ORANGE:	CIRCUITS THAT REMAIN ENERGIZED WHEN MAIN DISC. IS "OFF"

WIRE GAUGE

MOTOR CIRCUITS:	MIN. 12 AWG
CONTROL CIRCUITS:	MIN. 16 AWG
PLC I/O:	MIN. 18 AWG
FUSES:	LINE/LOAD SIDE SHALL BE EQUAL AWG
RETURN/SUPPLY:	SHALL BE EQUAL AWG

LEGEND

--------	FIELD WIRING
————	PANEL WIRING

HAPMAN
ideas that move
5944 E. N AVE., KALAMAZOO, MICHIGAN 49048
PHONE (269) 343-1675 FAX (269) 349-2477

DATE 4/21/23	JOB NO. X20335-BC	DRAWN MRL	
SCALE N/A		BOM = 1	DWG = 1

TITLE

120VAC WIRING DIAGRAM

TYPE 4X – HELIX CONVEYOR HI/LO

CUST. PROJECT SERVICES (FRITO LAY MODESTO)

SHEET 1 OF 17 | DWG. NO. X20335BC-B00 | REV. 0.0

REV	DESCRIPTION	DATE	BY
0.0	AS BUILT	6/29/23	MRL

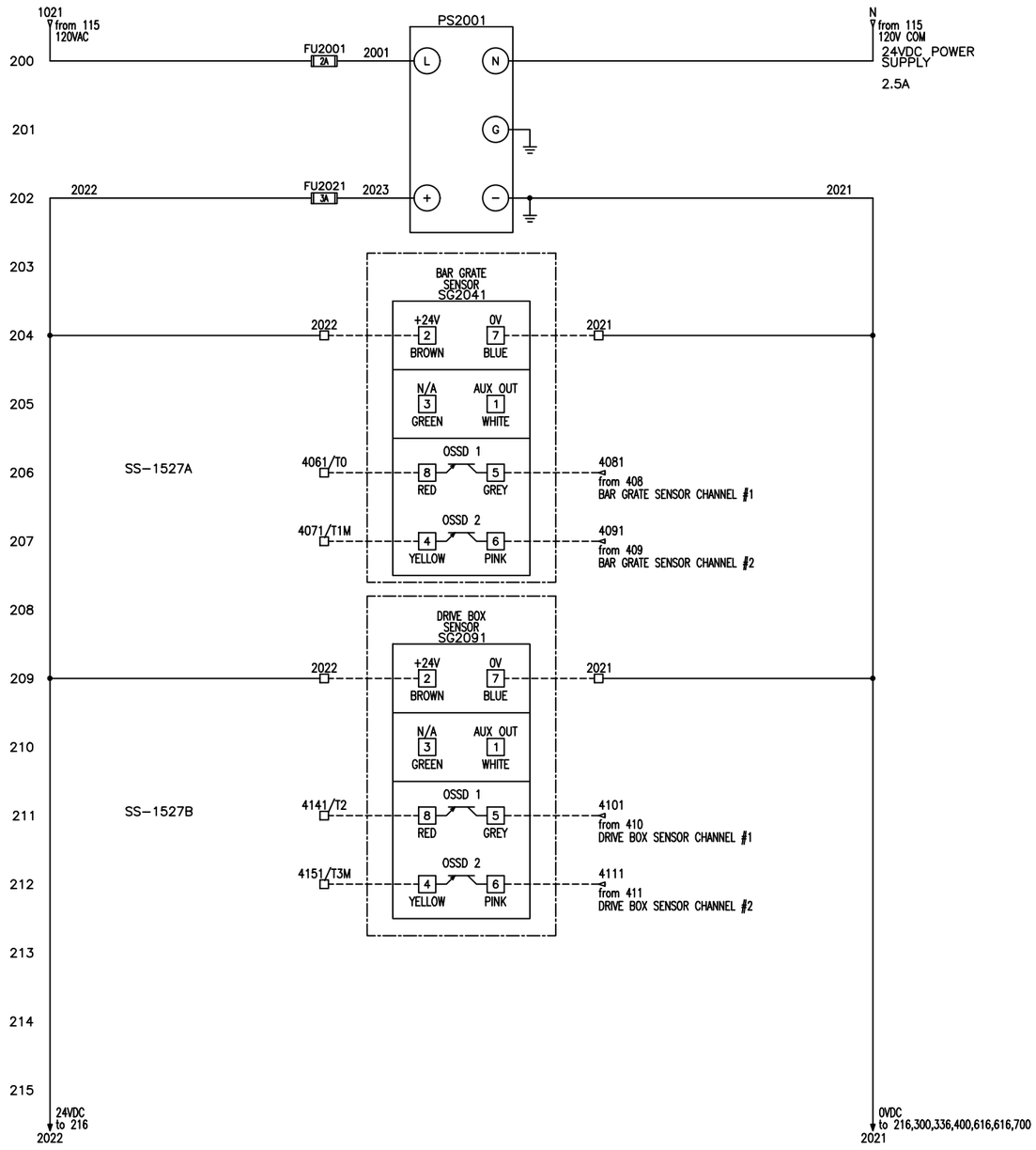

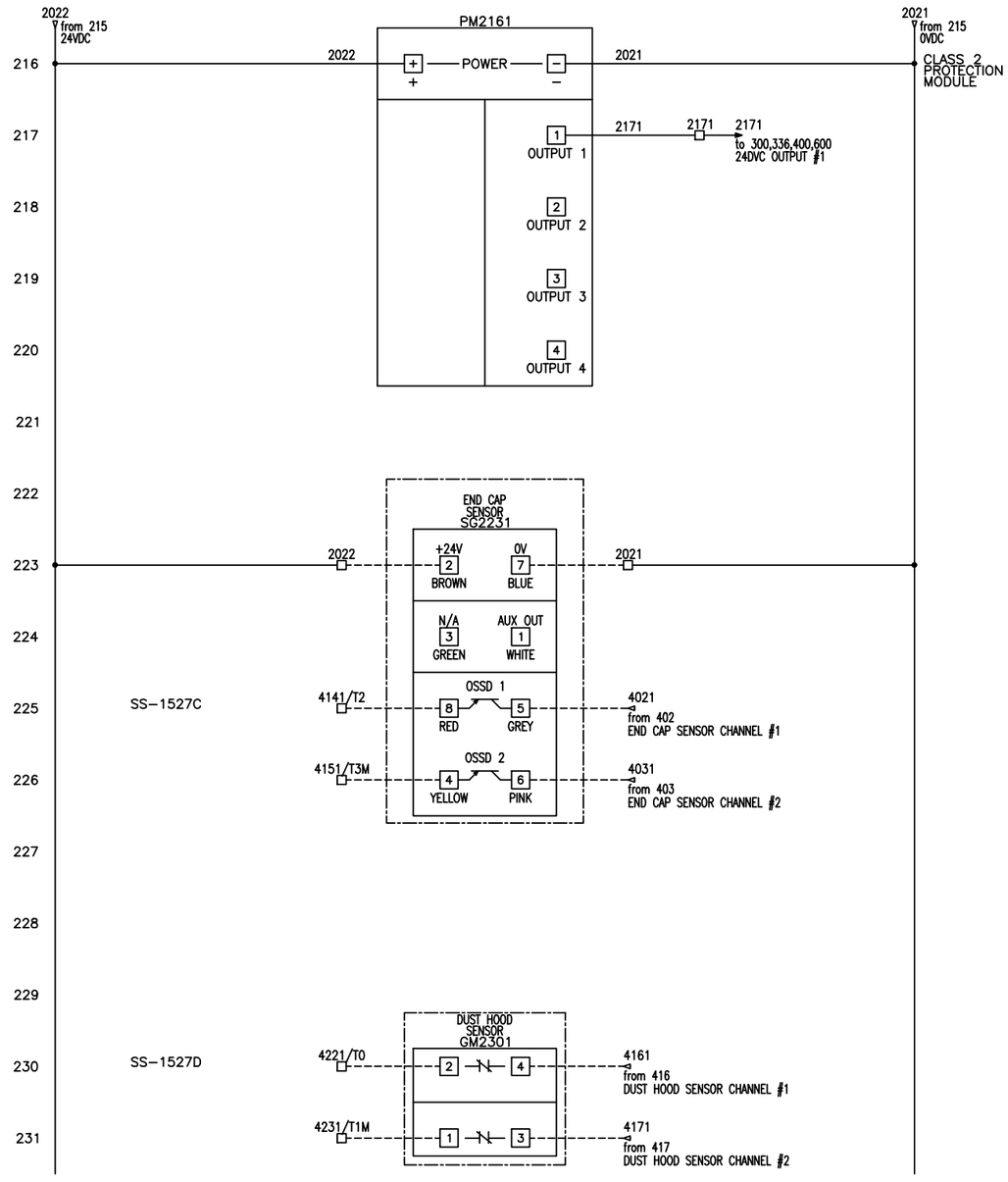

CONDUCTOR WIRE CODE

BLACK:	GREATER THAN 120VAC
RED:	120VAC OR LESS
WHITE:	GROUNDED AC LINE
BLUE:	UN GROUNDED VDC
WH/BLU:	GROUNDED VDC
GREEN:	GROUNDING CONDUCTORS
ORANGE:	CIRCUITS THAT REMAIN ENERGIZED WHEN MAIN DISC. IS "OFF"

WIRE GAUGE

MOTOR CIRCUITS:	MIN. 12 AWG
CONTROL CIRCUITS:	MIN. 16 AWG
PLC I/O:	MIN. 18 AWG
FUSES:	LINE/LOAD SIDE SHALL BE EQUAL AWG
RETURN/SUPPLY:	SHALL BE EQUAL AWG

LEGEND

--------	FIELD WIRING
————	PANEL WIRING

HAPMAN
ideas that move
5944 E. N AVE., KALAMAZOO, MICHIGAN 49048
PHONE (269) 343-1675 FAX (269) 349-2477

DATE 4/21/23	JOB NO. X20335-BC	DRAWN MRL	
SCALE N/A		BOM = 1	DWG = 1

TITLE

24VDC WIRING DIAGRAM

TYPE 4X – HELIX CONVEYOR HI/LO

CUST. PROJECT SERVICES (FRITO LAY MODESTO)

SHEET	DWG. NO.	REV.
2 OF 17	X20335BC-B00	0.0

REV	DESCRIPTION	DATE	BY
0.0	AS BUILT	6/29/23	MRL

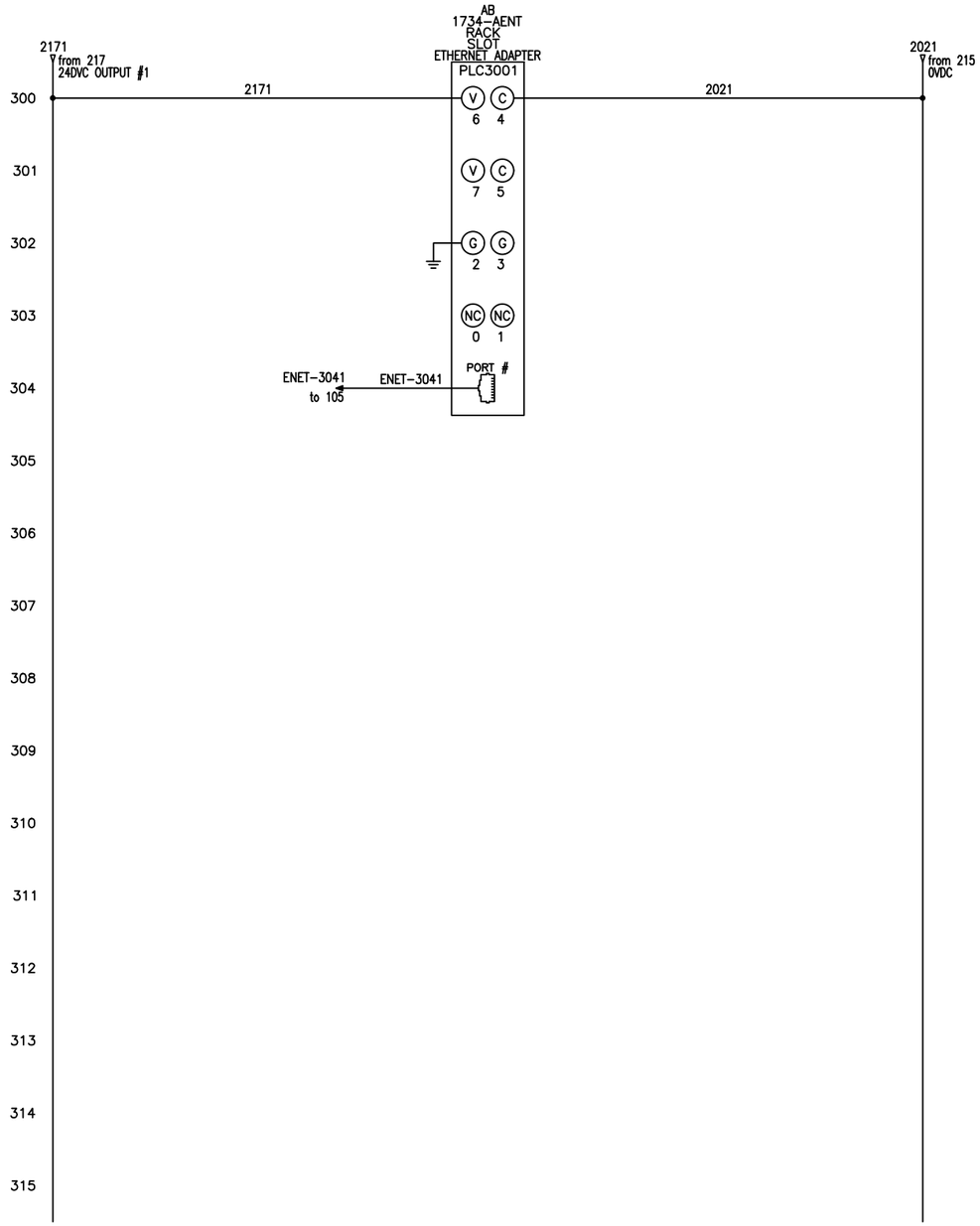

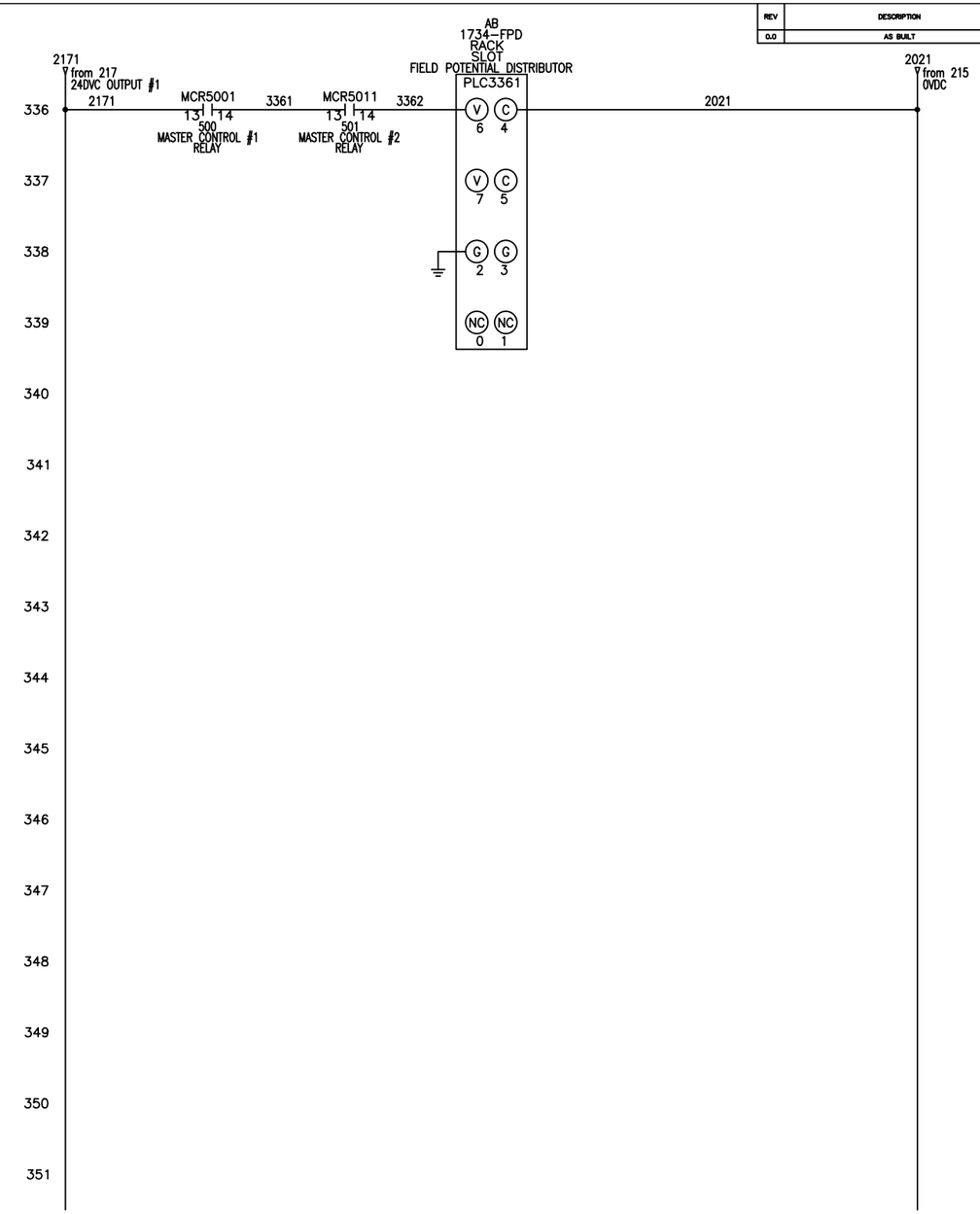

CONDUCTOR WIRE CODE

BLACK:	GREATER THAN 120VAC
RED:	120VAC OR LESS
WHITE:	GROUNDED AC LINE
BLUE:	UN GROUNDED VDC
WH/BLU:	GROUNDED VDC
GREEN:	GROUNDING CONDUCTORS
ORANGE:	CIRCUITS THAT REMAIN ENERGIZED WHEN MAIN DISC. IS "OFF"

WIRE GAUGE

MOTOR CIRCUITS:	MIN. 12 AWG
CONTROL CIRCUITS:	MIN. 16 AWG
PLC I/O:	MIN. 18 AWG
FUSES:	LINE/LOAD SIDE SHALL BE EQUAL AWG
RETURN/SUPPLY:	SHALL BE EQUAL AWG

LEGEND

--------	FIELD WIRING
————	PANEL WIRING

HAPMAN
ideas that move
5944 E. N AVE., KALAMAZOO, MICHIGAN 49048
PHONE (269) 343-1675 FAX (269) 349-2477

DATE 4/21/23	JOB NO. X20335-BC	DRAWN MRL	
SCALE N/A		BOM = 1	DWG = 1

TITLE

PLC WIRING DIAGRAM

TYPE 4X – HELIX CONVEYOR HI/LO

CUST. PROJECT SERVICES (FRITO LAY MODESTO)

SHEET 3 OF 17 | DWG. NO. X20335BC-B00 | REV. 0.0

REV	DESCRIPTION	DATE	BY
0.0	AS BUILT	6/29/23	MRL

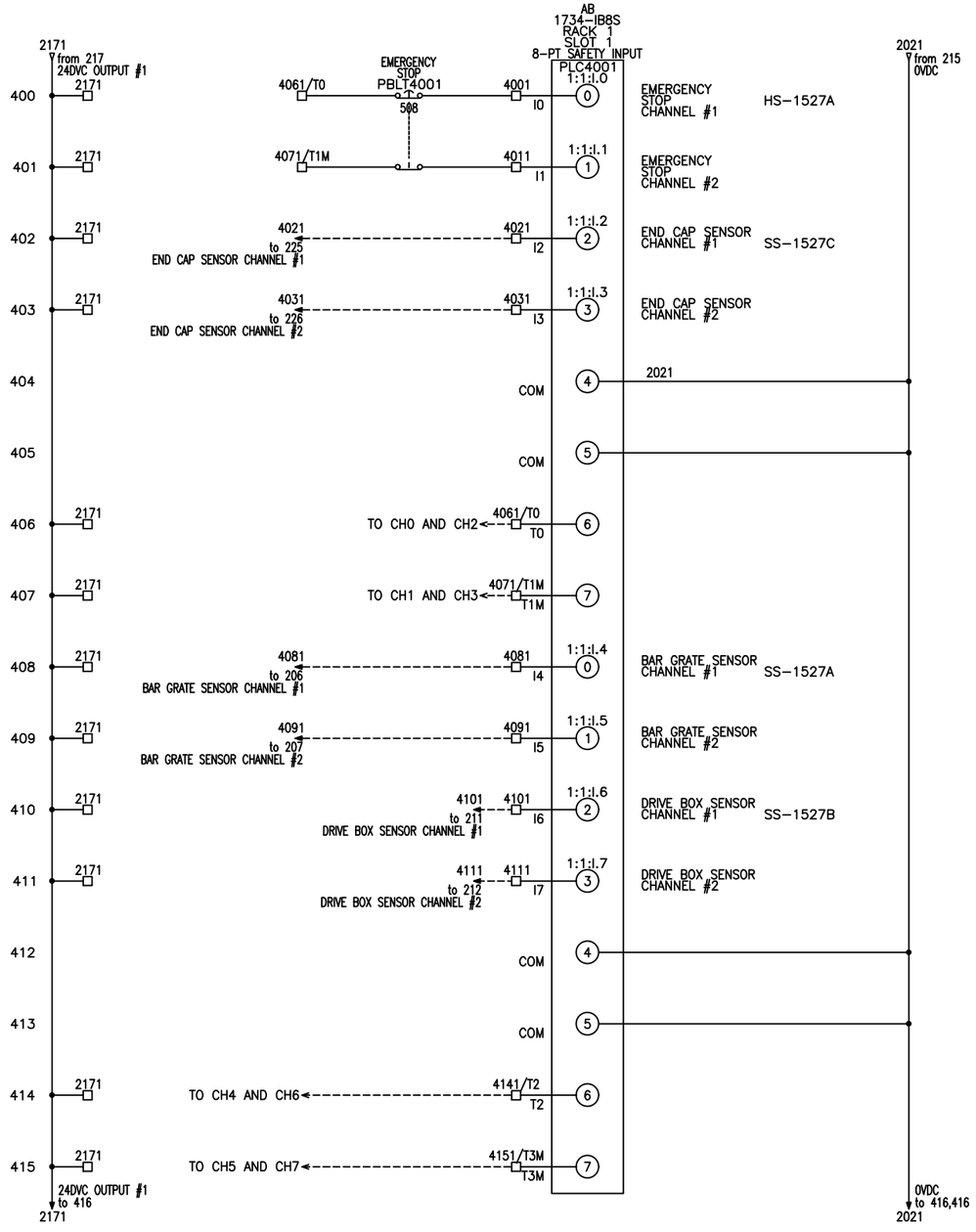

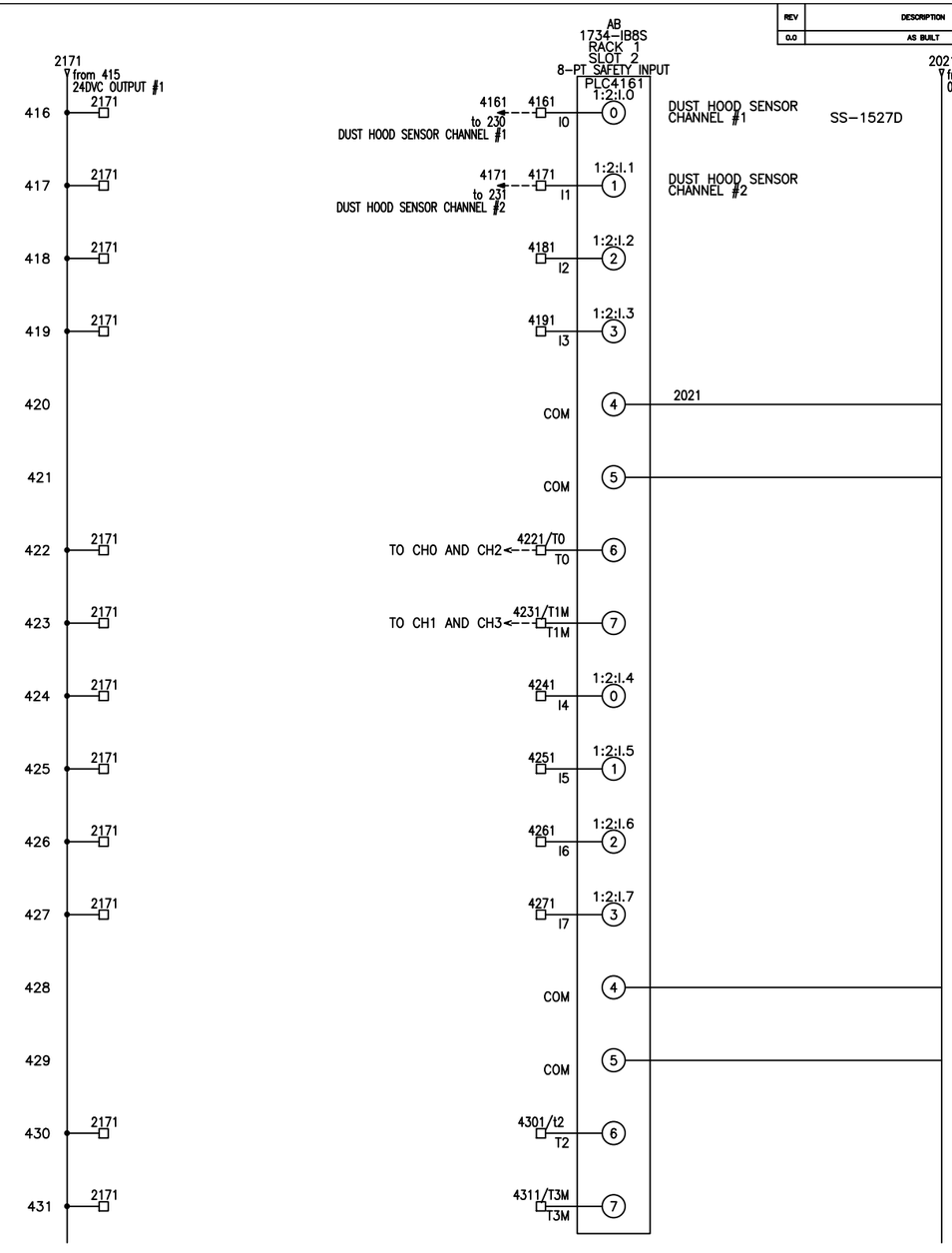

CONDUCTOR WIRE CODE

BLACK:	GREATER THAN 120VAC
RED:	120VAC OR LESS
WHITE:	GROUNDED AC LINE
BLUE:	UN GROUNDED VDC
WH/BLU:	GROUNDED VDC
GREEN:	GROUNDING CONDUCTORS
ORANGE:	CIRCUITS THAT REMAIN ENERGIZED WHEN MAIN DISC. IS "OFF"

WIRE GAUGE

MOTOR CIRCUITS:	MIN. 12 AWG
CONTROL CIRCUITS:	MIN. 16 AWG
PLC I/O:	MIN. 18 AWG
FUSES:	LINE/LOAD SIDE SHALL BE EQUAL AWG
RETURN/SUPPLY:	SHALL BE EQUAL AWG

LEGEND

--------	FIELD WIRING
————	PANEL WIRING

HAPMAN
ideas that move
5944 E. N AVE., KALAMAZOO, MICHIGAN 49048
PHONE (269) 343-1675 FAX (269) 349-2477

DATE 4/21/23	JOB NO. X20335-BC	DRAWN MRL	
SCALE N/A		BOM = 1	DWG = 1

TITLE

PLC WIRING DIAGRAM

TYPE 4X – HELIX CONVEYOR HI/LO

CUST. PROJECT SERVICES (FRITO LAY MODESTO)

SHEET 4 OF 17 | DWG. NO. X20335BC-B00 | REV. 0.0

REV	DESCRIPTION	DATE	BY
0.0	AS BUILT	6/29/23	MRL

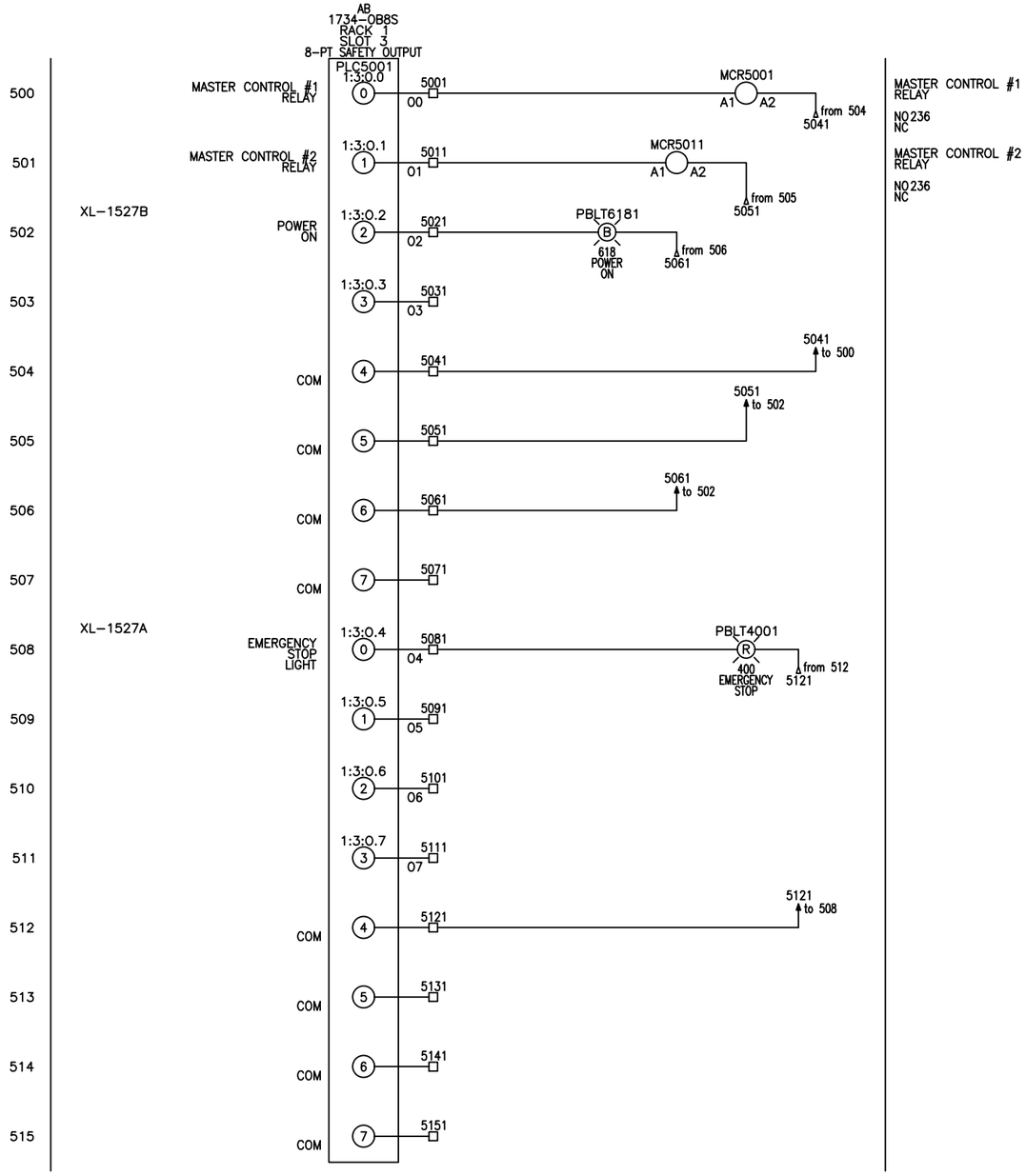

CONDUCTOR WIRE CODE

BLACK:	GREATER THAN 120VAC
RED:	120VAC OR LESS
WHITE:	GROUNDED AC LINE
BLUE:	UN GROUNDED VDC
WH/BLU:	GROUNDED VDC
GREEN:	GROUNDING CONDUCTORS
ORANGE:	CIRCUITS THAT REMAIN ENERGIZED WHEN MAIN DISC. IS "OFF"

WIRE GAUGE

MOTOR CIRCUITS:	MIN. 12 AWG
CONTROL CIRCUITS:	MIN. 16 AWG
PLC I/O:	MIN. 18 AWG
FUSES:	LINE/LOAD SIDE SHALL BE EQUAL AWG
RETURN/SUPPLY:	SHALL BE EQUAL AWG

LEGEND

--------	FIELD WIRING
————	PANEL WIRING

HAPMAN
ideas that move
5944 E. N AVE., KALAMAZOO, MICHIGAN 49048
PHONE (269) 343-1675 FAX (269) 349-2477

DATE 4/21/23	JOB NO. X20335-BC	DRAWN MRL	
SCALE N/A		BOM = 1	DWG = 1

TITLE

PLC WIRING DIAGRAM

TYPE 4X – HELIX CONVEYOR HI/LO

CUST. PROJECT SERVICES (FRITO LAY MODESTO)

SHEET 5 OF 17	DWG. NO. X20335BC-B00	REV. 0.0

REV	DESCRIPTION	DATE	BY
0.0	AS BUILT	6/29/23	MRL

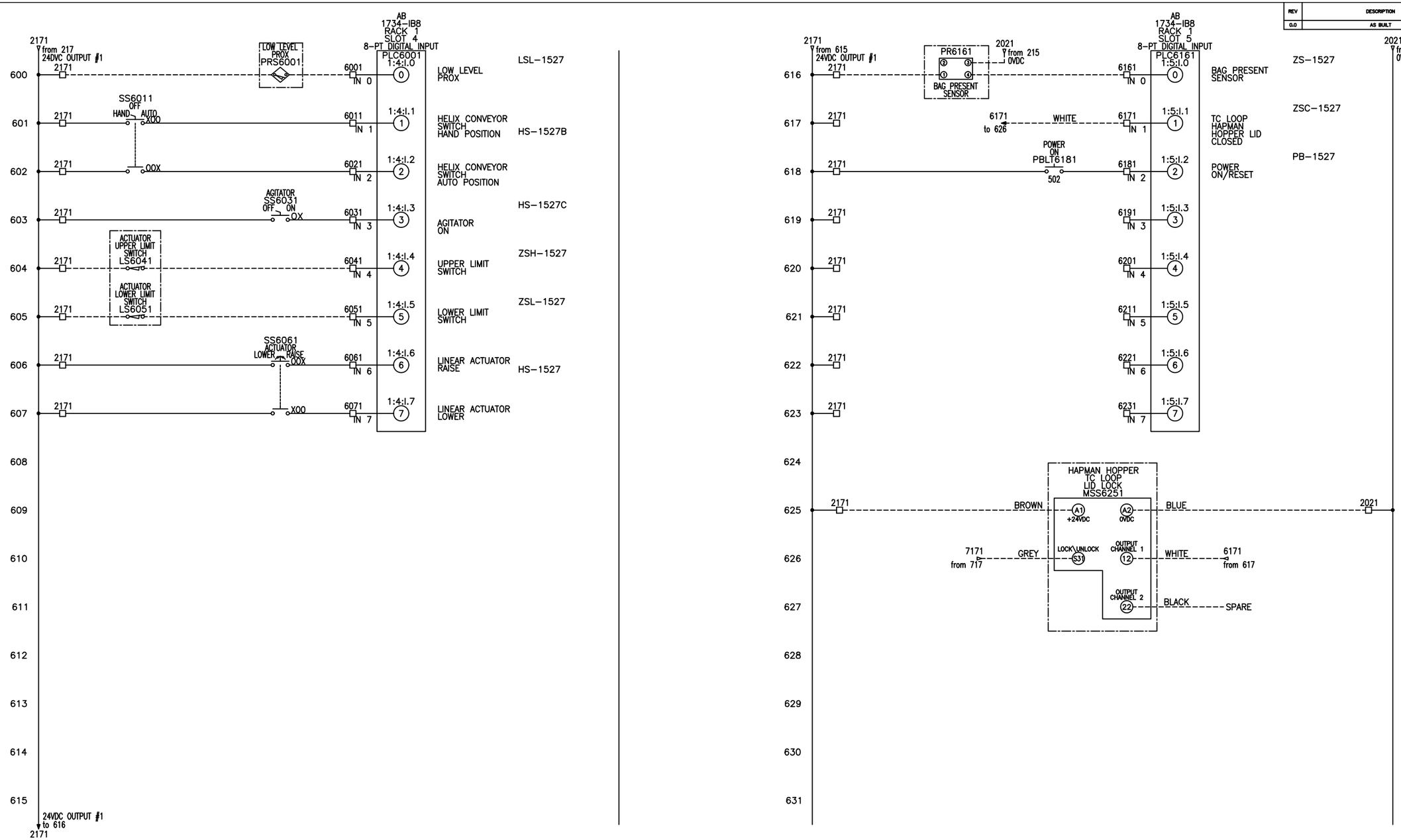

CONDUCTOR WIRE CODE

BLACK:	GREATER THAN 120VAC
RED:	120VAC OR LESS
WHITE:	GROUNDED AC LINE
BLUE:	UN GROUNDED VDC
WH/BLU:	GROUNDED VDC
GREEN:	GROUNDING CONDUCTORS
ORANGE:	CIRCUITS THAT REMAIN ENERGIZED WHEN MAIN DISC. IS "OFF"

WIRE GAUGE

MOTOR CIRCUITS:	MIN. 12 AWG
CONTROL CIRCUITS:	MIN. 16 AWG
PLC I/O:	MIN. 18 AWG
FUSES:	LINE/LOAD SIDE SHALL BE EQUAL AWG
RETURN/SUPPLY:	SHALL BE EQUAL AWG

LEGEND

--------	FIELD WIRING
————	PANEL WIRING

HAPMAN ideas that move
5944 E. N AVE., KALAMAZOO, MICHIGAN 49048
PHONE (269) 343-1675 FAX (269) 349-2477

DATE 4/21/23	JOB NO. X20335-BC	DRAWN MRL	
SCALE N/A		BOM = 1	DWG = 1

TITLE

PLC WIRING DIAGRAM

TYPE 4X – HELIX CONVEYOR HI/LO

CUST. PROJECT SERVICES (FRITO LAY MODESTO)

SHEET 6 OF 17 | DWG. NO. X20335BC-B00 | REV. 0.0

REV	DESCRIPTION	DATE	BY
0.0	AS BUILT	6/29/23	MRL

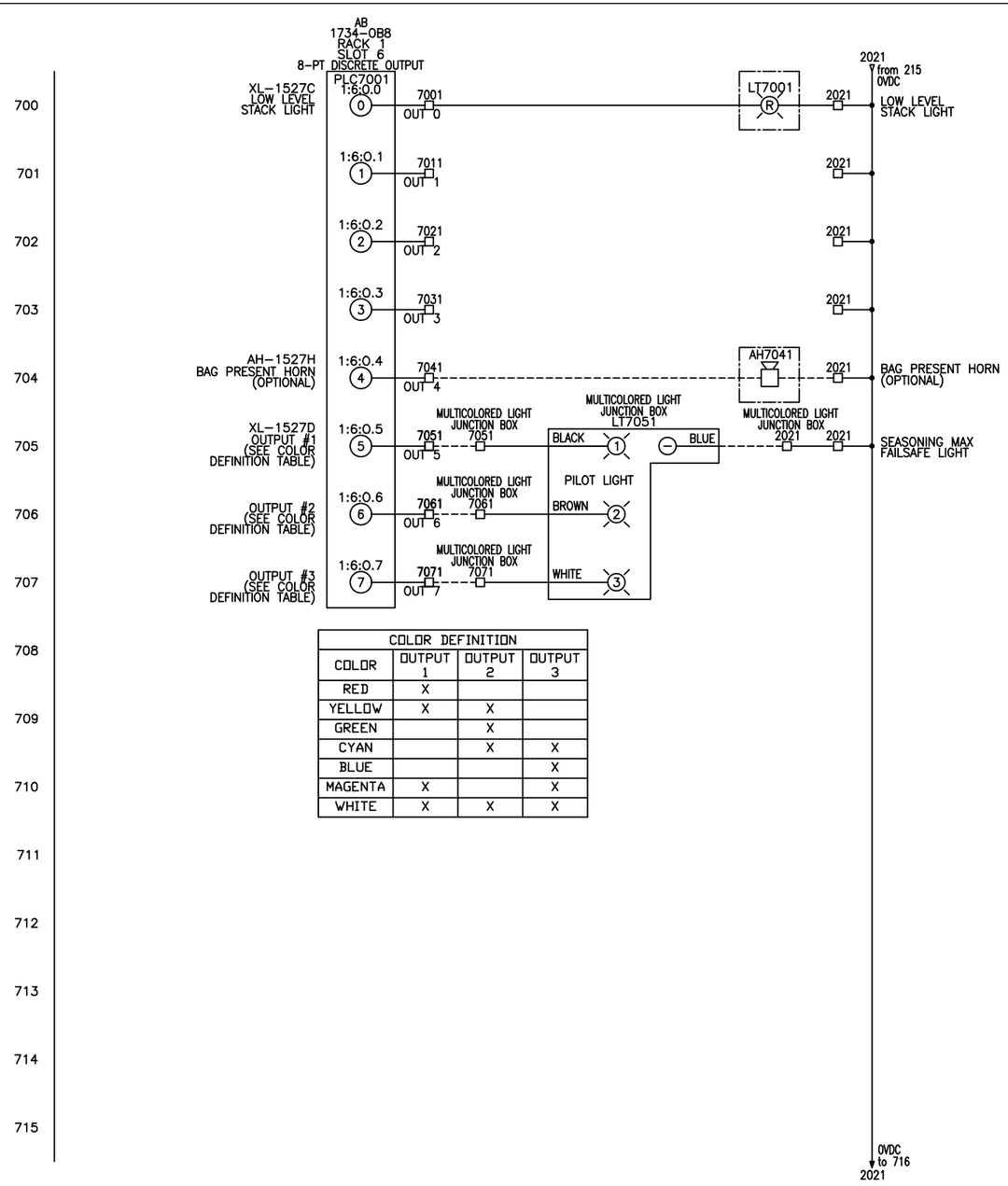

COLOR DEFINITION			
COLOR	OUTPUT 1	OUTPUT 2	OUTPUT 3
RED	X		
YELLOW	X	X	
GREEN		X	
CYAN		X	X
BLUE			X
MAGENTA	X		X
WHITE	X	X	X

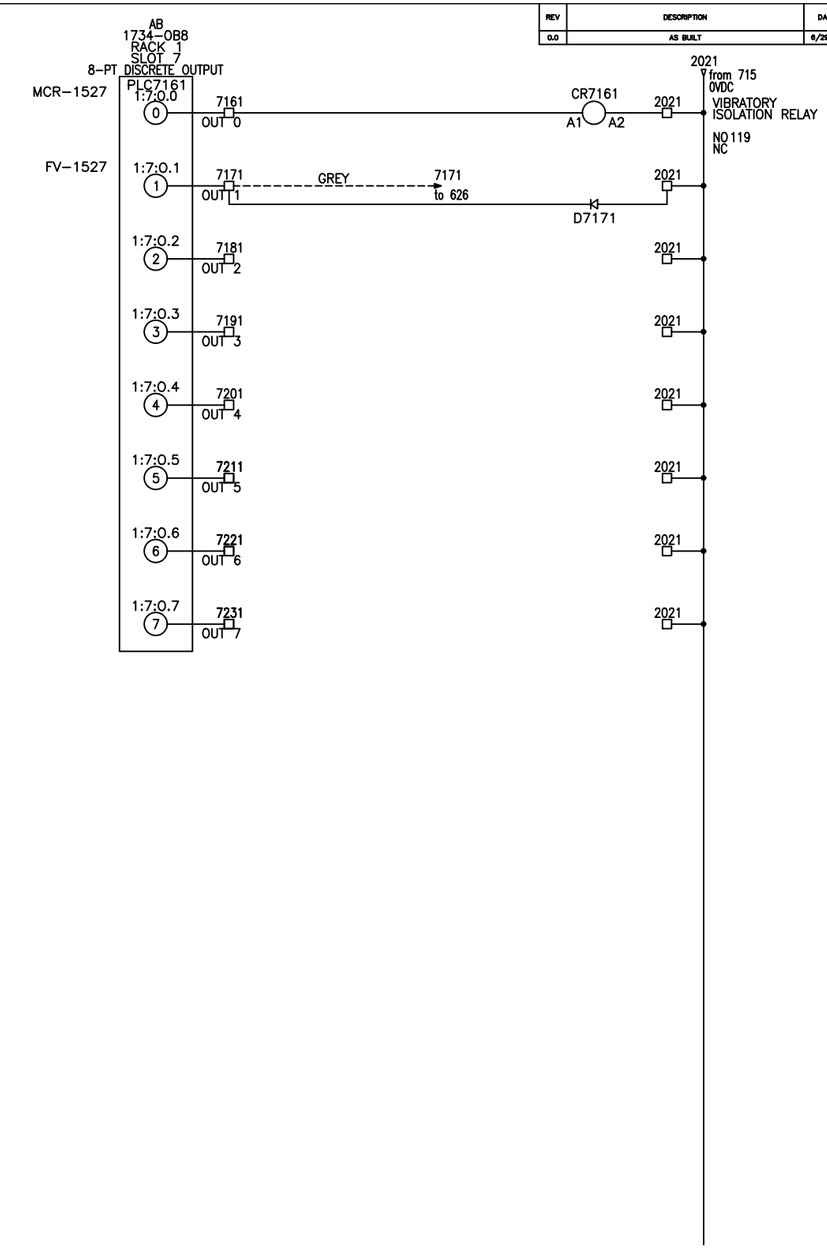

CONDUCTOR WIRE CODE

BLACK:	GREATER THAN 120VAC
RED:	120VAC OR LESS
WHITE:	GROUNDED AC LINE
BLUE:	UN GROUNDED VDC
WH/BLU:	GROUNDED VDC
GREEN:	GROUNDING CONDUCTORS
ORANGE:	CIRCUITS THAT REMAIN ENERGIZED WHEN MAIN DISC. IS "OFF"

WIRE GAUGE

MOTOR CIRCUITS:	MIN. 12 AWG
CONTROL CIRCUITS:	MIN. 16 AWG
PLC I/O:	MIN. 18 AWG
FUSES:	LINE/LOAD SIDE SHALL BE EQUAL AWG
RETURN/SUPPLY:	SHALL BE EQUAL AWG

LEGEND

--------	FIELD WIRING
————	PANEL WIRING

HAPMAN
ideas that move
5944 E. N AVE., KALAMAZOO, MICHIGAN 49048
PHONE (269) 343-1675 FAX (269) 349-2477

DATE 4/21/23	JOB NO. X20335-BC	DRAWN MRL	
SCALE N/A		BOM = 1	DWG = 1

TITLE

PLC WIRING DIAGRAM

TYPE 4X – HELIX CONVEYOR HI/LO

CUST. PROJECT SERVICES (FRITO LAY MODESTO)

SHEET 7 OF 17	DWG. NO. X20335BC-B00	REV. 0.0

REV	DESCRIPTION	DATE	BY
0.0	AS BUILT	6/29/23	MRL

800
801
802
803
804
805
806
807
808
809
810
811
812
813
814
815

816
817
818
819
820
821
822
823
824
825
826
827
828
829
830
831

CONDUCTOR WIRE CODE

BLACK:	GREATER THAN 120VAC
RED:	120VAC OR LESS
WHITE:	GROUNDED AC LINE
BLUE:	UN GROUNDED VDC
WH/BLU:	GROUNDED VDC
GREEN:	GROUNDING CONDUCTORS
ORANGE:	CIRCUITS THAT REMAIN ENERGIZED WHEN MAIN DISC. IS "OFF"

WIRE GAUGE

MOTOR CIRCUITS:	MIN. 12 AWG
CONTROL CIRCUITS:	MIN. 16 AWG
PLC I/O:	MIN. 18 AWG
FUSES:	LINE/LOAD SIDE SHALL BE EQUAL AWG
RETURN/SUPPLY:	SHALL BE EQUAL AWG

LEGEND

--------	FIELD WIRING
————	PANEL WIRING

HAPMAN
ideas that move
5944 E. N AVE., KALAMAZOO, MICHIGAN 49048
PHONE (269) 343-1675 FAX (269) 349-2477

DATE 4/21/23	JOB NO. X20335-BC	DRAWN MRL	
SCALE N/A		BOM = 1	DWG = 1

TITLE
RESERVED
TYPE 4X – HELIX CONVEYOR HI/LO

CUST. PROJECT SERVICES (FRITO LAY MODESTO)

SHEET 8 OF 17 | DWG. NO. X20335BC-B00 | REV. 0.0

REV	DESCRIPTION	DATE	BY
0.0	AS BUILT	6/29/23	MRL

900
901
902
903
904
905
906
907
908
909
910
911
912
913
914
915

916
917
918
919
920
921
922
923
924
925
926
927
928
929
930
931

CONDUCTOR WIRE CODE

BLACK:	GREATER THAN 120VAC
RED:	120VAC OR LESS
WHITE:	GROUNDED AC LINE
BLUE:	UN GROUNDED VDC
WH/BLU:	GROUNDED VDC
GREEN:	GROUNDING CONDUCTORS
ORANGE:	CIRCUITS THAT REMAIN ENERGIZED WHEN MAIN DISC. IS "OFF"

WIRE GAUGE

MOTOR CIRCUITS:	MIN. 12 AWG
CONTROL CIRCUITS:	MIN. 16 AWG
PLC I/O:	MIN. 18 AWG
FUSES:	LINE/LOAD SIDE SHALL BE EQUAL AWG
RETURN/SUPPLY:	SHALL BE EQUAL AWG

LEGEND

--------	FIELD WIRING
————	PANEL WIRING

HAPMAN
ideas that move
5944 E. N AVE., KALAMAZOO, MICHIGAN 49048
PHONE (269) 343-1675 FAX (269) 349-2477

DATE 4/21/23	JOB NO. X20335-BC	DRAWN MRL	
SCALE N/A		BOM = 1	DWG = 1

TITLE
RESERVED
TYPE 4X – HELIX CONVEYOR HI/LO

CUST. PROJECT SERVICES (FRITO LAY MODESTO)

SHEET 9 OF 17 | DWG. NO. X20335BC-B00 | REV. 0.0

REV	DESCRIPTION	DATE	BY
0.0	AS BUILT	6/29/23	MRL

1000
1001
1002
1003
1004
1005
1006
1007
1008
1009
1010
1011
1012
1013
1014
1015

1016
1017
1018
1019
1020
1021
1022
1023
1024
1025
1026
1027
1028
1029
1030
1031

CONDUCTOR WIRE CODE

BLACK:	GREATER THAN 120VAC
RED:	120VAC OR LESS
WHITE:	GROUNDED AC LINE
BLUE:	UN GROUNDED VDC
WH/BLU:	GROUNDED VDC
GREEN:	GROUNDING CONDUCTORS
ORANGE:	CIRCUITS THAT REMAIN ENERGIZED WHEN MAIN DISC. IS "OFF"

WIRE GAUGE

MOTOR CIRCUITS:	MIN. 12 AWG
CONTROL CIRCUITS:	MIN. 16 AWG
PLC I/O:	MIN. 18 AWG
FUSES:	LINE/LOAD SIDE SHALL BE EQUAL AWG
RETURN/SUPPLY:	SHALL BE EQUAL AWG

LEGEND

--------	FIELD WIRING
————	PANEL WIRING

HAPMAN
ideas that move
5944 E. N AVE., KALAMAZOO, MICHIGAN 49048
PHONE (269) 343-1675 FAX (269) 349-2477

DATE 4/21/23	JOB NO. X20335-BC	DRAWN MRL	
SCALE N/A		BOM = 1	DWG = 1

TITLE
RESERVED
TYPE 4X – HELIX CONVEYOR HI/LO

CUST. PROJECT SERVICES (FRITO LAY MODESTO)

SHEET 10 OF 17 | DWG. NO. X20335BC-B00 | REV. 0.0

REV	DESCRIPTION	DATE	BY
0.0	AS BUILT	6/29/23	MRL

1100
1101
1102
1103
1104
1105
1106
1107
1108
1109
1110
1111
1112
1113
1114
1115

1116
1117
1118
1119
1120
1121
1122
1123
1124
1125
1126
1127
1128
1129
1130
1131

CONDUCTOR WIRE CODE

BLACK:	GREATER THAN 120VAC
RED:	120VAC OR LESS
WHITE:	GROUNDED AC LINE
BLUE:	UN GROUNDED VDC
WH/BLU:	GROUNDED VDC
GREEN:	GROUNDING CONDUCTORS
ORANGE:	CIRCUITS THAT REMAIN ENERGIZED WHEN MAIN DISC. IS "OFF"

WIRE GAUGE

MOTOR CIRCUITS:	MIN. 12 AWG
CONTROL CIRCUITS:	MIN. 16 AWG
PLC I/O:	MIN. 18 AWG
FUSES:	LINE/LOAD SIDE SHALL BE EQUAL AWG
RETURN/SUPPLY:	SHALL BE EQUAL AWG

LEGEND

--------	FIELD WIRING
————	PANEL WIRING

HAPMAN
ideas that move
5944 E. N AVE., KALAMAZOO, MICHIGAN 49048
PHONE (269) 343-1675 FAX (269) 349-2477

DATE 4/21/23	JOB NO. X20335-BC	DRAWN MRL	
SCALE N/A		BOM = 1	DWG = 1

TITLE
RESERVED
TYPE 4X – HELIX CONVEYOR HI/LO

CUST. PROJECT SERVICES (FRITO LAY MODESTO)

SHEET 11 OF 17 | DWG. NO. X20335BC-B00 | REV. 0.0

REV	DESCRIPTION	DATE	BY
0.0	AS BUILT	6/29/23	MRL

1200
1201
1202
1203
1204
1205
1206
1207
1208
1209
1210
1211
1212
1213
1214
1215
1216
1217
1218
1219
1220
1221
1222
1223
1224
1225
1226
1227
1228
1229
1230
1231

CONDUCTOR WIRE CODE

BLACK:	GREATER THAN 120VAC
RED:	120VAC OR LESS
WHITE:	GROUNDED AC LINE
BLUE:	UN GROUNDED VDC
WH/BLU:	GROUNDED VDC
GREEN:	GROUNDING CONDUCTORS
ORANGE:	CIRCUITS THAT REMAIN ENERGIZED WHEN MAIN DISC. IS "OFF"

WIRE GAUGE

MOTOR CIRCUITS:	MIN. 12 AWG
CONTROL CIRCUITS:	MIN. 16 AWG
PLC I/O:	MIN. 18 AWG
FUSES:	LINE/LOAD SIDE SHALL BE EQUAL AWG
RETURN/SUPPLY:	SHALL BE EQUAL AWG

LEGEND

--------	FIELD WIRING
————	PANEL WIRING

HAPMAN
ideas that move
5944 E. N AVE., KALAMAZOO, MICHIGAN 49048
PHONE (269) 343-1675 FAX (269) 349-2477

DATE 4/21/23	JOB NO. X20335-BC	DRAWN MRL	
SCALE N/A		BOM = 1	DWG = 1

TITLE
RESERVED
TYPE 4X – HELIX CONVEYOR HI/LO

CUST. PROJECT SERVICES (FRITO LAY MODESTO)

SHEET 12 OF 17 | DWG. NO. X20335BC-B00 | REV. 0.0

REV	DESCRIPTION	DATE	BY
0.0	AS BUILT	6/29/23	MRL

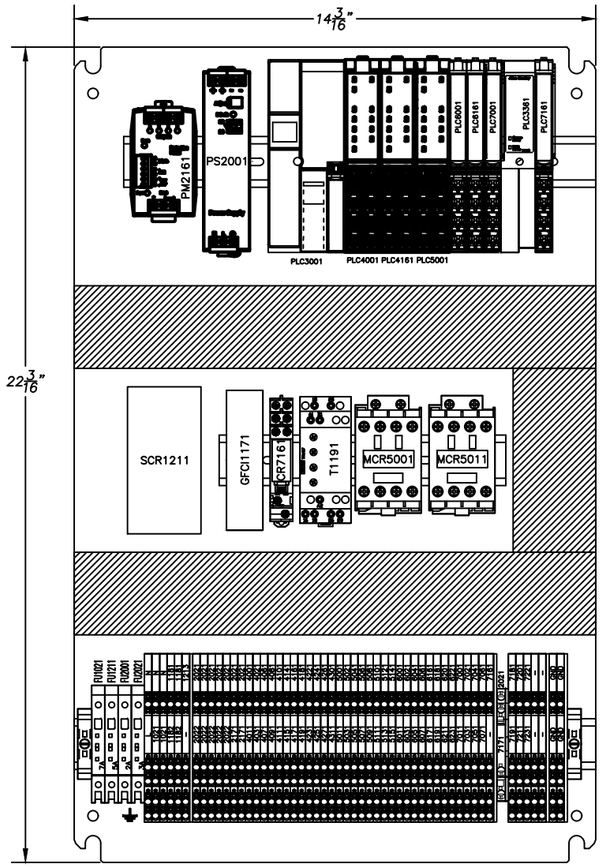

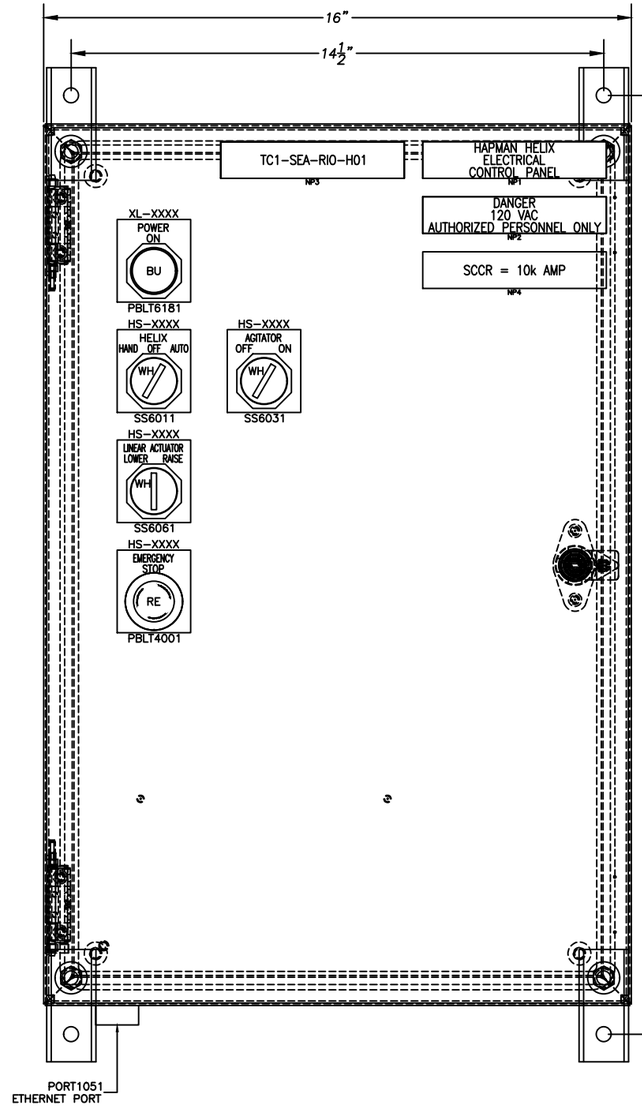

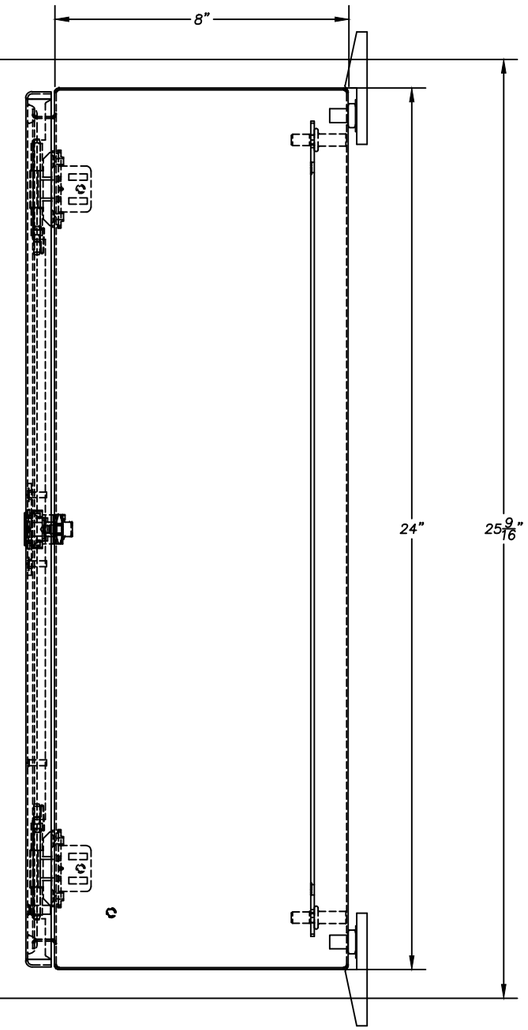

HELIX CONVEYOR
HOPPER LOW LEVEL LIGHT

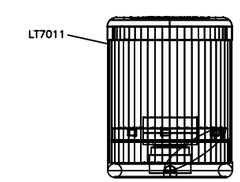

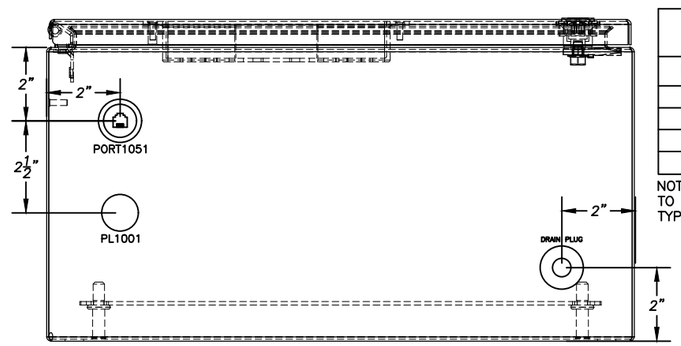

PIN/PLUG CONNECTIONS BY OTHERS

NAMEPLATE DESCRIPTIONS			
N.P. #	LINE 1	LINE 2	LINE 3
NP1	HAPMAN HELIX	ELECTRICAL	CONTROL PANEL
NP2	DANGER	120 VAC	AUTHORIZED PERSONNEL ONLY
NP3	TC1-SEA-RIO-H01		
NP4	SCCR = 10k AMPS		

NOTES:
1. NP1 SHALL BE 1"x5" LAMINATED 1/16" MICARTA "GRAVIPLY" WHITE FRONT WITH 1/4" HIGH ENGRAVED BLACK LETTERS.
2. NP2 SHALL BE 1"x5" LAMINATED 1/16" MICARTA "GRAVIPLY" RED FRONT WITH 1/4" HIGH ENGRAVED WHITE LETTERS.
3. NP3-NP4 SHALL BE 1"X5" LAMINATED 1/16" MICARTA "GRAVIPLY" WHITE FRONT
WITH 1/4" HIGH ENGRAVED BLACK LETTERS.
4. ALL OTHER NAMEPLATES SHALL BE 3/4"x2" WHITE FRONT WITH BLACK LETTERS

FUSE REPLACEMENT			
FUSE #	TYPE/SIZE	AMPERAGE	VOLTAGE
FU1021	MDL-7-R	7A	250VAC
FU1211	MDL-5-R	5A	250VAC
FU2001	MDL-2-R	2A	250VAC
FU2021	ABC-3-R	3A	250VAC/125VDC

NOTE:
TO REDUCE THE RISK OF FIRE – REPLACE ONLY WITH THE SAME TYPE AND RATING OF FUSE IN THE FUSE REPLACEMENT CHART.

VOLTAGE:	120 VOLT
PHASE & FREQ.:	1PH., 60HZ
FULL LOAD CURRENT:	2 AMP
LARGEST MOTOR FLA:	1 AMP
S.C.C.R.:	10k AMP
ENCLOSURE RATING:	TYPE 4X
SCHEMATIC:	X20335BC-B00 (MAIN PANEL)
MFG. BY:	KMC Global Controls & Automation
UL FILE NUMBER:	E500032

HAPMAN
ideas that move
5944 E. N AVE., KALAMAZOO, MICHIGAN 49048
PHONE (269) 343-1675 FAX (269) 349-2477

DATE 4/21/23	JOB NO. X20335-BC	DRAWN MRL	
SCALE N/A		BOM = 1	DWG = 1

TITLE
MAIN PANEL LAYOUT
TYPE 4X – HELIX CONVEYOR HI/LO

CUST. PROJECT SERVICES (FRITO LAY MODESTO)

SHEET 13 OF 17 | DWG. NO. X20335BC-B00 | REV. 0.0

REV	DESCRIPTION	DATE	BY
0.0	AS BUILT	6/29/23	MRL

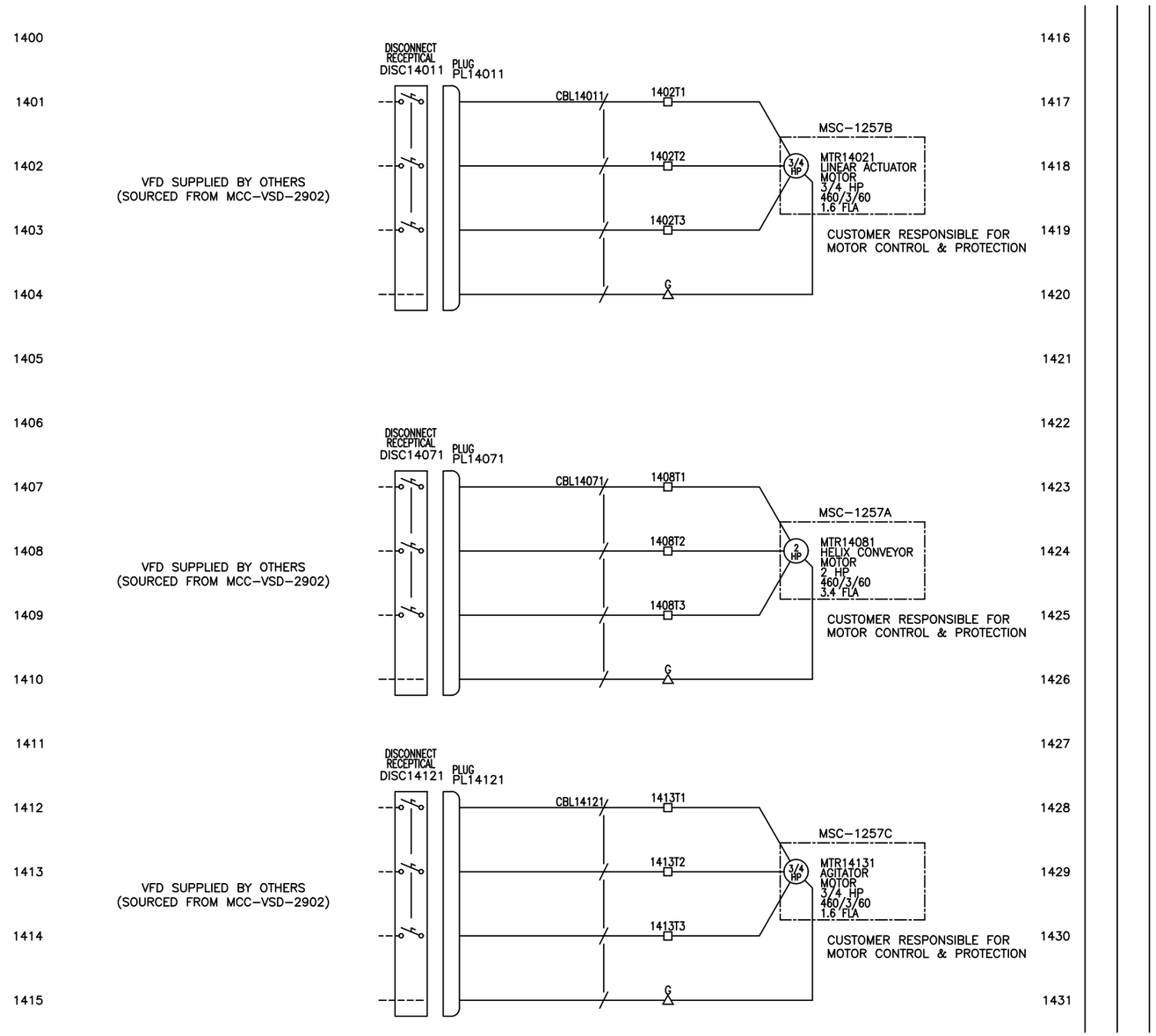

CONDUCTOR WIRE CODE

BLACK:	GREATER THAN 120VAC
RED:	120VAC OR LESS
WHITE:	GROUNDED AC LINE
BLUE:	UN GROUNDED VDC
WH/BLU:	GROUNDED VDC
GREEN:	GROUNDING CONDUCTORS
ORANGE:	CIRCUITS THAT REMAIN ENERGIZED WHEN MAIN DISC. IS "OFF"

WIRE GAUGE

MOTOR CIRCUITS:	MIN. 12 AWG
CONTROL CIRCUITS:	MIN. 16 AWG
PLC I/O:	MIN. 18 AWG
FUSES:	LINE/LOAD SIDE SHALL BE EQUAL AWG
RETURN/SUPPLY:	SHALL BE EQUAL AWG

LEGEND

--------	FIELD WIRING
————	PANEL WIRING

HAPMAN
ideas that move
5944 E. N AVE., KALAMAZOO, MICHIGAN 49048
PHONE (269) 343-1675 FAX (269) 349-2477

DATE 4/21/23	JOB NO. X20335-BC	DRAWN MRL	
SCALE N/A		BOM = 1	DWG = 1

TITLE
MOTOR JUNCTION BOX WIRING DIAGRAM
TYPE 4X – HELIX CONVEYOR HI/LO

CUST. PROJECT SERVICES (FRITO LAY MODESTO)

SHEET	DWG. NO.	REV.
14 OF 17	X20335BC-B00	0.0

REV	DESCRIPTION	DATE	BY
0.0	AS BUILT	6/29/23	MRL

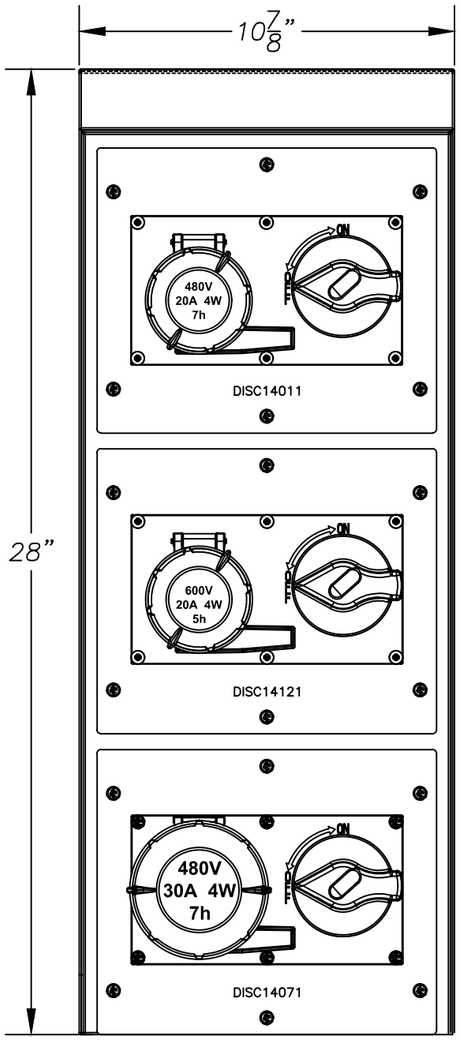

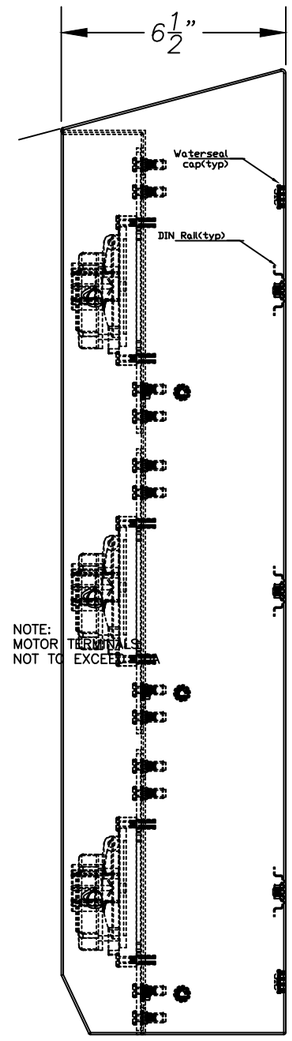

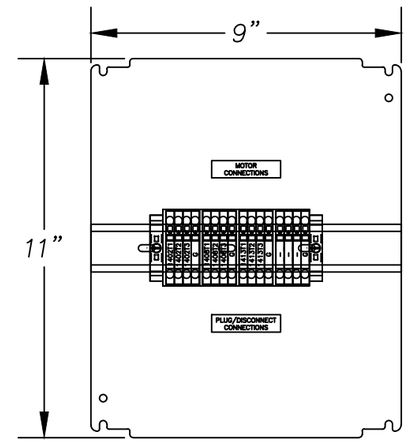

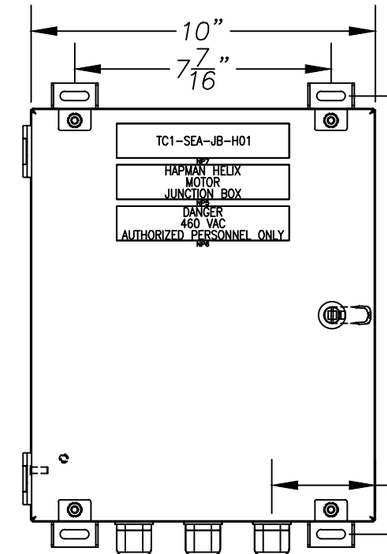

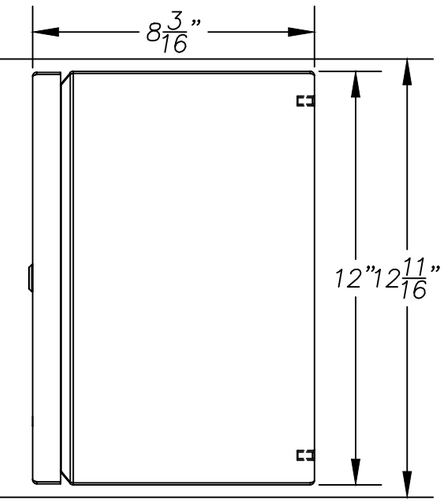

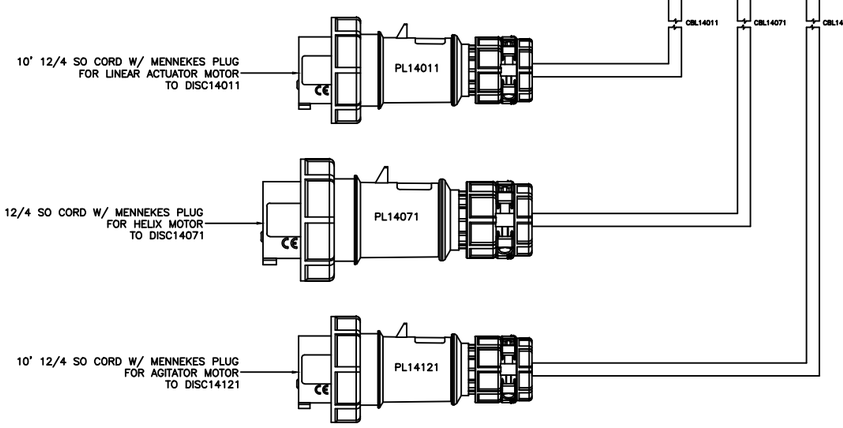

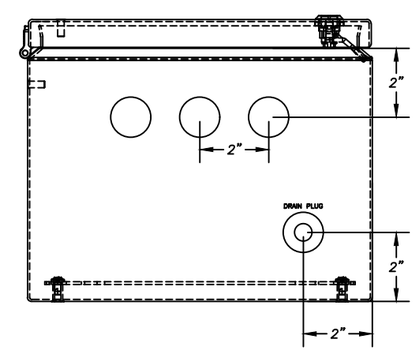

NAMEPLATE DESCRIPTIONS			
N.P. #	LINE 1	LINE 2	LINE 3
NP5	HAPMAN HELIX	MOTOR	JUNCTION BOX
NP6	DANGER	460 VAC	AUTHORIZED PERSONNEL ONLY
NP7	TC1-SEA-JB-H01		

NOTES:
1. NP5 SHALL BE 1"x5" LAMINATED 1/16" MICARTA "GRAVIPLY" WHITE FRONT WITH 1/4" HIGH ENGRAVED BLACK LETTERS.
2. NP6 SHALL BE 1"x5" LAMINATED 1/16" MICARTA "GRAVIPLY" RED FRONT WITH 1/4" HIGH ENGRAVED WHITE LETTERS.
3. NP7 SHALL BE 1"X5" LAMINATED 1/16" MICARTA "GRAVIPLY" WHITE FRONT WITH 1/4" HIGH ENGRAVED BLACK LETTERS.
4. ALL OTHER NAMEPLATES SHALL BE 3/4"x2" WHITE FRONT WITH BLACK LETTERS

MOTOR JUNCTION BOX	
VOLTAGE:	460 VOLT
PHASE & FREQ.:	3PH., 60HZ
ENCLOSURE RATING:	TYPE 4X
SCHEMATIC:	X20335BC-B00
MFG. BY:	KMC Global Controls & Automation
UL FILE NUMBER	E500032

HAPMAN
ideas that move
5944 E. N AVE., KALAMAZOO, MICHIGAN 49048
PHONE (269) 343-1675 FAX (269) 349-2477

DATE 4/21/23 | JOB NO. X20335-BC | DRAWN MRL
SCALE N/A | BOM = 1 | DWG = 1

TITLE
MOTOR JUNCTION BOX
TYPE 4X – HELIX CONVEYOR HI/LO

CUST. PROJECT SERVICES (FRITO LAY MODESTO)

SHEET 15 OF 17 | DWG. NO. X20335BC-B00 | REV. 0.0

REV	DESCRIPTION	DATE	BY
0.0	AS BUILT	6/29/23	MRL

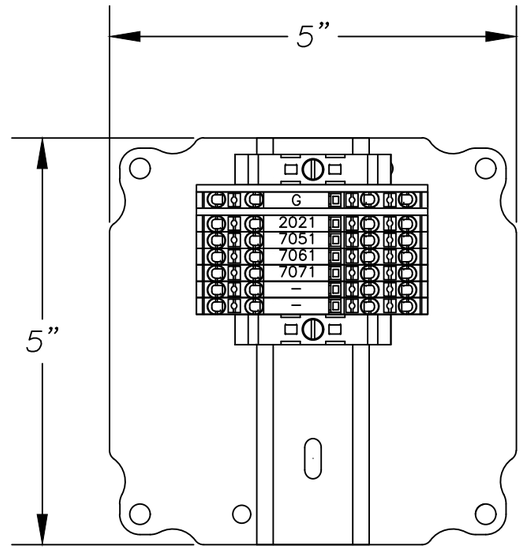

NOTE:
USE COPPER WIRE ONLY WITH INSULATION RATING OF 75°C OR GREATER

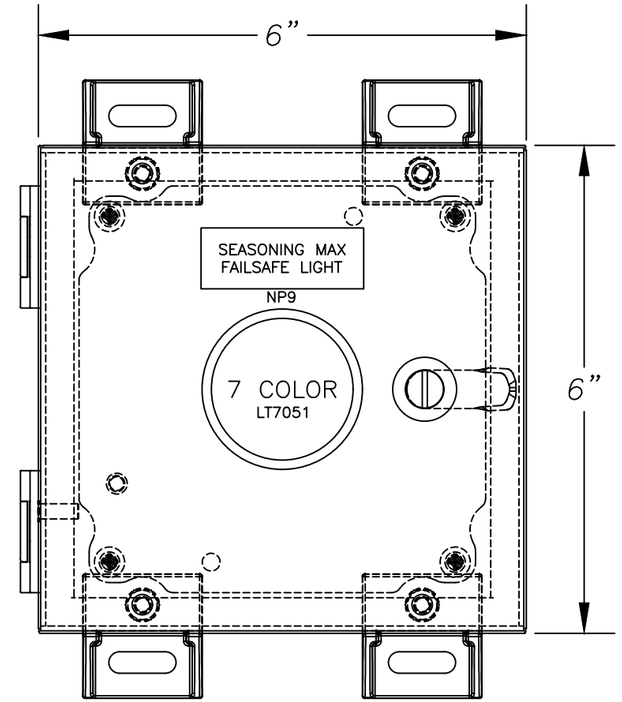

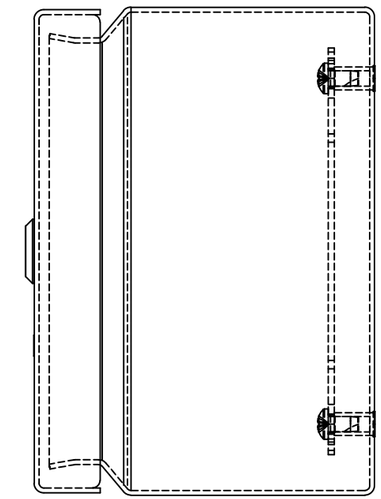

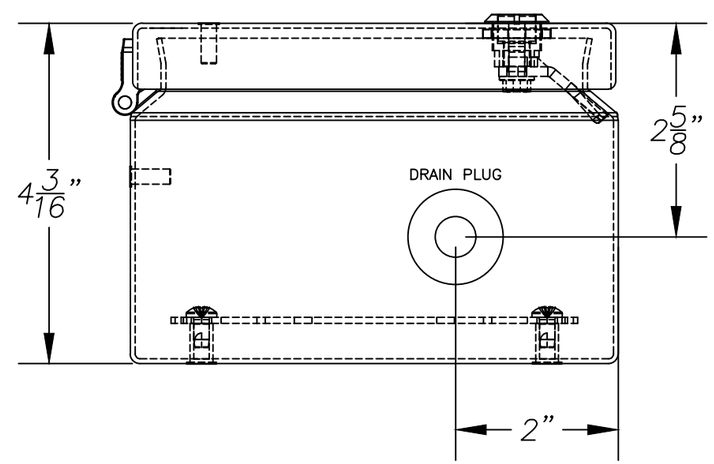

NAMEPLATE DESCRIPTIONS			
N.P. #	LINE 1	LINE 2	LINE 3
NP9	SEASONING MAX	FAILSAFE LIGHT	–

NOTES:
1. NP9 SHALL BE 2”x3/4” LAMINATED 1/16” MICARTA ”GRAVIPLY” WHITE FRONT WITH 1/4” HIGH ENGRAVED BLACK LETTERS.

MULTICOLORED LIGHT JUNCTION BOX	
VOLTAGE:	24VDC
ENCLOSURE RATING:	TYPE 4X
SCHEMATIC:	X20335BC–B00
MFG. BY:	KMC Global Controls & Automation
UL FILE NUMBER	E500032

HAPMAN
ideas that move
5944 E. N AVE., KALAMAZOO, MICHIGAN 49048
PHONE (269) 343–1675 FAX (269) 349–2477

DATE 4/21/23	JOB NO. X20335–BC	DRAWN MRL	
SCALE N/A		BOM = 1	DWG = 1

TITLE
MULTICOLORED LIGHT JUNCTION BOX PANEL LAYOUT
TYPE 4X – HELIX CONVEYOR HI/LO

CUST. PROJECT SERVICES (FRITO LAY MODESTO)

SHEET 16 OF 17 | DWG. NO. X20335BC–B00 | REV. 0.0

REV	DESCRIPTION	DATE	BY
0.0	AS BUILT	6/29/23	MRL

ITEM	QTY	PART #	MANUFACTURER	DESCRIPTION	DESCRIPTOR
1	1	CSD24168SS	HOFFMAN	24"x16"x8" TYPE 4X STAINLESS STEEL ENCLOSURE	MAIN PANEL
2	1	CP2416	HOFFMAN	SUB PANEL	.
3	1	CMFKSS	HOFFMAN	TYPE 4X STAINLESS STEEL FOOT KIT	.
4	1	IAEBHC6	PANDUIT	PROG. PORT, RJ45 CAT6	PORT1051
5	1	576-S10-004	QUIKTRON	4' SHIELDED CAT6 ETHERNET CABLE	ENET-3041
6	4	1492-H6	AB	300V 12A FUSIBLE TERMINAL BLOCK #30-#12AWG	FU1021,1211,2001,2021
7	1	1492-N37	AB	FUSIBLE TERMINAL END BARRIER	FU1021-2021
8	1	MDL-7-R	BUSSMANN	7A 1/4"x1-1/4" TIME-DELAY GLASS FUSE	FU1021
9	1	MDL-5-R	BUSSMANN	5A 1/4"x1-1/4" TIME-DELAY GLASS FUSE	FU1211
10	1	MDL-2-R	BUSSMANN	2A 1/4"x1-1/4" TIME-DELAY GLASS FUSE	FU2001
11	1	ABC-3-R	BUSSMANN	3A 1/4"x1-1/4" FAST-ACTING CERAMIC FUSE	FU2021
12	1	1492-MCGAT115	AB	15A 1 POLE GFCI CIRCUIT BREAKER	GFCI1171
13	1	1492-AMCDIN1	AB	GFCI CIRCUIT BREAKER DIN CLIP	GFCI1171
14	1	TRW27	EATON	24-240 VAC/DC MULTI-FUNCTION DPDT TIMER	T1191
15	1	179502-A	FMC	115/60/1 SCR	SCR1211
16	1	4SSL1/2DR	APPLETON	2"x4"x2-1/8" HANDYBOX	SCR1211
17	1	180A	APPLETON	4-1/8"x2-3/8" HANDYBOX COVER	SCR1211
18	1	PIM60.245	PULS	24VDC 2.5A NEC CLASS2 COMPLAINT POWER SUPPLY	PS2001
19	1	PISA11.CLASS2	PULS	24VDC 14.8A PROTECTION MODULE	PM2161
20	1	1734-AENT	AB	POINT I/O ETHERNET ADAPTER	PLC3001
21	1	1734-FPD	AB	POINT I/O FIELD POTENTIAL DISTRIBUTOR MODULE	PLC3361
22	2	1734-IB8S	AB	8 POINT SAFETY SINKING INPUT CARD	PLC4001,4161
23	1	1734-OB8S	AB	8 POINT SAFETY SOURCING OUTPUT CARD	PLC5001
24	2	1734-IB8	AB	POINT I/O 8PT DIGITAL INPUT CARD	PLC6001,6161
25	2	1734-OB8	AB	POINT I/O 8PT DIGITAL OUTPUT CARD	PLC7001,7161
26	10	1734-TBS	AB	POINT I/O SPRING TERMINAL BASE	PLC4001-7161
27	1	800H-FRXTQH2RA	AB	30mm 12-130VAC/DC RED ILLUMINATED PUSH/PULL MUSH HEAD PB	PBLT4001
28	1	800T-XA4	AB	30mm 2 N.C. CONTACT BLOCK	PBLT4001
29	5	CT-SPECIAL	CT	30mm LEGEND CUSTOM TEXT (SEE DRAWING)	PBLT4001,6181,SS6011-6061
30	2	700-CF400EJ	AB	24VDC CONTROL RELAY WITH 4 N.O. CONTACTS	MCR5001,5011
31	1	800H-JR2A	AB	30mm 3 POSITION MAINTAINED SELECTOR SWITCH	SS6011
32	1	800H-HR2D1	AB	30mm 2 POSITION MAINTAINED SELECTOR SWITCH	SS6031
33	1	800H-JR91A	AB	3 POS. SPRING RETURN SELECTOR SWITCH W/ 1 N.O. & 1 N.C. CONTATCS	SS6061
34	1	800H-QRBH2B	AB	30mm 12-130VAC/DC BLUE ILLUM. FLUSH HEAD PB W/ 1 N.O. & 1 N.C. CONTACT	PBLT6181
35	1	700-HK32Z24	AB	24VDC DPDT SLIM RELAY CUBE	CR7001
36	1	700-HN222	AB	DPDT SLIM RELAY SOCKET	CR7001
37	1	1492-LD4DR	AB	DOUBLE STACK DIODE TERMINAL	D7171
38	1	1492-EBLD4	AB	END PLATE FOR DOUBLE STACK TERMINAL	D7171
39	51	3210609	PHOENIX	5.2mm DOUBLE STACK PUSH IN TERMINAL	.
40	2	3210611	PHOENIX	5.2mm DOUBLE STACK PUSH IN GROUND TERMINAL	.
41	4	3210613	PHOENIX	END PLATE FOR 5.2mm DOUBLE STACK PUSH IN TERMINAL	.
42	2	0800886	PHOENIX	SCREW ON END STOP	.
43	2'	111023	E-RAIL	35mm DIN RAIL	.
44	4'	F2X4LG6	PANDUIT	2"x4" WIREWAY	.
45	4'	C2LG6	PANDUIT	2" WIREWAY COVER	.
46	4	JPPT4A	CT	1"x5" CUSTOM ENGRAVED LEGEND	NP1-4
47	1	SSTC 1CD	CROUSE-HINDS	DRAIN PULG, 1/2" STAINLESS STEEL	.
48	1	212PA	MENCOM	1/2" NPT LOCKNUT	.
49	1	PPS0305W2100	PANDUIT	ARC FLASH LABEL	.
50					
51					
52					
53					
54					
55					
56					

ITEM	QTY	PART #	MANUFACTURER	DESCRIPTION	DESCRIPTOR
57	1	888N-M4AF1-1F	AB	4 PIN 600V, 10A, 16 AWG MALE RECEPTACLE 1' LEAD	PL1001
58	1	889N-F4AFC-12F	AB	4 PIN 600V, 10A, FEMALE QUICK CHANGE CONNECTOR W/ 12' LEAD	RECEP1001 (SHIP LOOSE)
59	REF	855T-B24TL4	ALLEN BRADLEY	24VDC STEADY LED TOWER LIGHT- (AB), RED	LT7011
60	REF	855T-BCBC	ALLEN BRADLEY	SURFACE MOUNT BASE- (AB), W/CAP, 1/2 NPT	LT7011
61					
62					
63	1	12108ELJSS	SCE	12"x10"x8" TYPE 4X STAINLESS STEEL ENCLOSURE	MOTOR JUNCTION BOX
64	1	12P10	SCE	SUB PANEL	.
65	12	3211757	PHOENIX	6.2mm 30A PUSH IN TERMINAL	.
66	4	3211766	PHOENIX	6.2mm PUSH IN GROUND TERMINAL	.
67	4	3030420	PHOENIX	END COVER FOR 6.2mm PUSH IN TERMINAL	.
68	2	0800886	PHOENIX	SCREW ON END STOP	.
69	1'	111023	E-RAIL	35mm DIN RAIL	.
70	3	SHC1036	HUBBELL	3/4" NPT MACHINED ALUMINUM CORD GRIP (0.5-0.63")	CBL14011,14071,14121
71	3	20509002	HUBBELL	3/4" NPT METAL CLAD SEALING O-RING	CBL14011,14071,14121
72	3	234PA	MENCOM	3/4" NPT LOCKNUT	CBL14011,14071,14121
73	33'	12/4 SO CORD	CAROL	12/4 SO CORD	CBL14011,14071,14121
74	1	ME420P7W	MENNEKES	20A 3P 4W 480V WATERTIGHT PLUG	PL14011
75	1	ME430P7W	MENNEKES	30A 3P 4W 480V WATERTIGHT PLUG	PL14071
76	1	ME420P5W	MENNEKES	20A 3P 4W 600V WATERTIGHT PLUG	PL14121
77	1	SPX3A-639068	MENNEKES	AMAXX STAINLESS STEEL 3 POSITION INTERLOCKED RECEPTACLE	DISC14011,14071,14121
78	3	JPPT4A	CT	1"x5" CUSTOM ENGRAVED LEGEND	NP5-7
79	1	SSTC 1CD	CROUSE-HINDS	DRAIN PULG, 1/2" STAINLESS STEEL	.
80	1	212PA	MENCOM	1/2" NPT LOCKNUT	.
81	1	PPS0305W2100	PANDUIT	ARC FLASH LABEL	.
82					
83					
84					
85					
86					
87	1	606ELJSS	SCE	6"x6"x4" TYPE 4X STAINLESS STEEL ENCLOSURE	MULTICOLORED LIGHT JUNCTION BOX
88	1	6P6JGALV	SCE	GALVANIZED SUB PANEL	.
89	1	K50L2FRGB7QP	BANNER	50mm 10-30VDC 7 COLOR RGB PILOT LIGHT	LT7051
90	1	MQDC1-515RA	BANNER	CORDSET, 5 PIN STRAIGHT CONNECTOR 15'	LT7051
91	1	JPPT2A	CT	3/4"x2" CUSTOM ENGRAVED LEGEND (WHITE W/ BLACK)	NP8
92	6	1492-P3Q	AB	5.1mm 4-WIRE PUSH IN TERMINAL	.
93	1	1492-PG3Q	AB	5.1mm 4-WIRE PUSH IN GROUND TERMINAL	.
94	2	1492-EBP3Q	AB	END PLATE FOR 5.1mm 4 WIRE PUSH IN TERMINAL	.
95	2	0800886	PHOENIX	SCREW ON END STOP	.
96	0.5'	111023	E-RAIL	35mm DIN RAIL	.
97	1	SSTC 1CD	CROUSE-HINDS	DRAIN PULG, 1/2" STAINLESS STEEL	.
98	1	212PA	MENCOM	1/2" NPT LOCKNUT	.
99	1	31622003L	HUBBELL	1/2" NPT LOCKING NUT	.
100					
101					
102					
103					
104					
105					

HAPMAN
ideas that move
5944 E. N AVE., KALAMAZOO, MICHIGAN 49048
PHONE (269) 343-1675 FAX (269) 349-2477

DATE 4/21/23	JOB NO. X20335-BC	DRAWN MRL	
SCALE N/A		BOM = 1	DWG = 1

TITLE

BILL OF MATERIALS

TYPE 4X - HELIX CONVEYOR HI/LO

CUST. PROJECT SERVICES (FRITO LAY MODESTO)

SHEET 17 OF 17 | DWG. NO. X20335BC-B00 | REV. 0.0

REV.	DESCRIPTION	DATE	BY
.	.	.	.

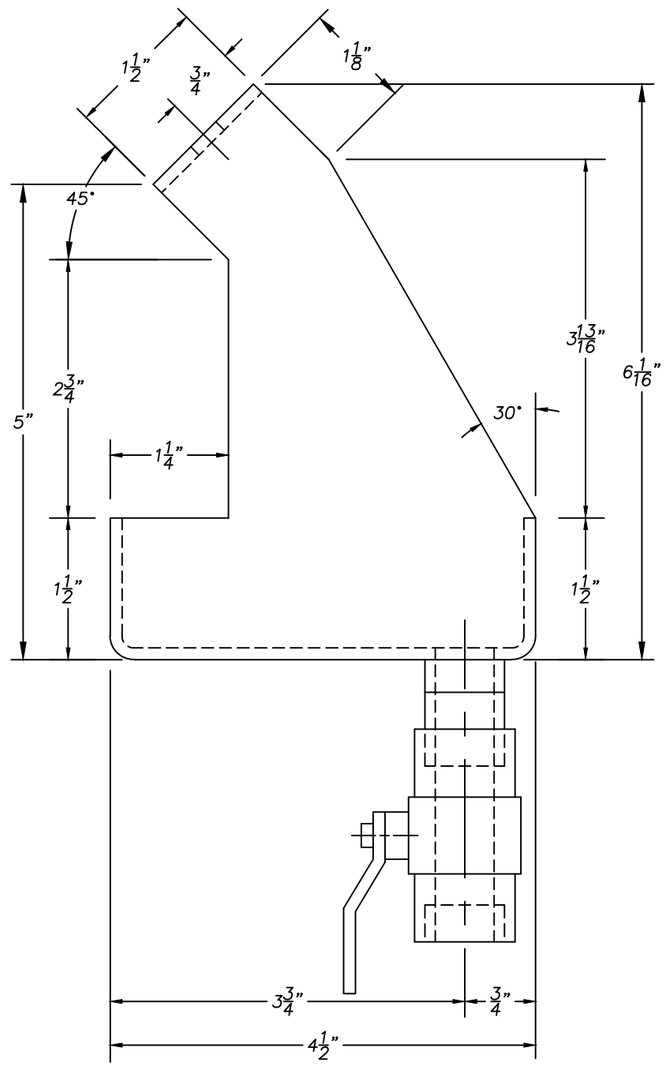

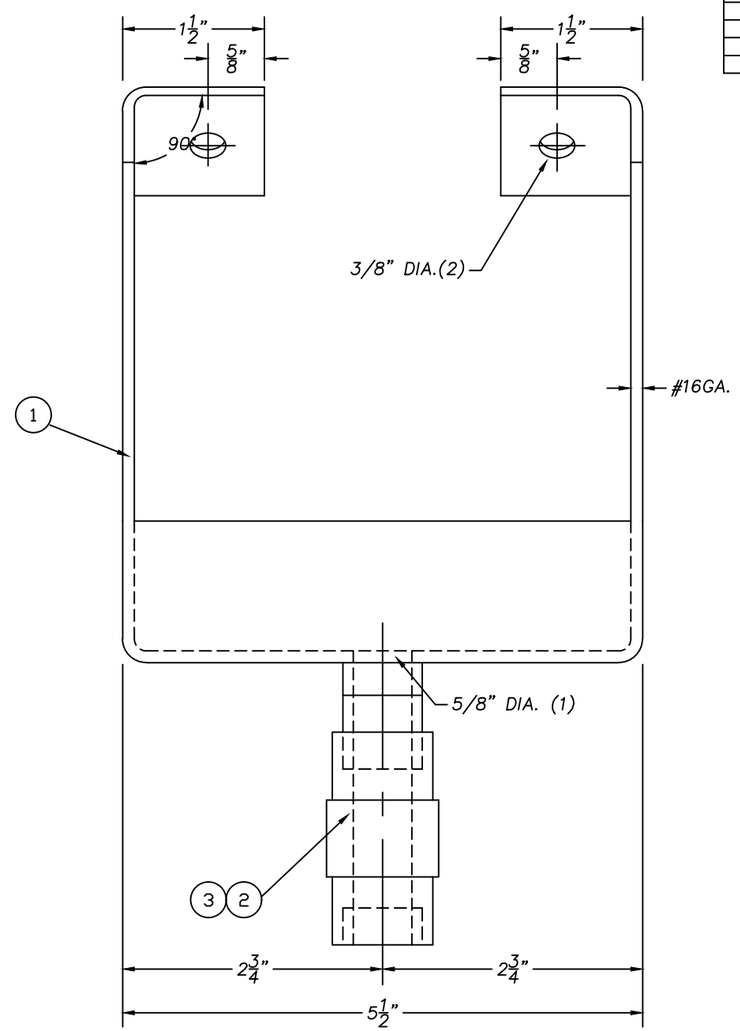

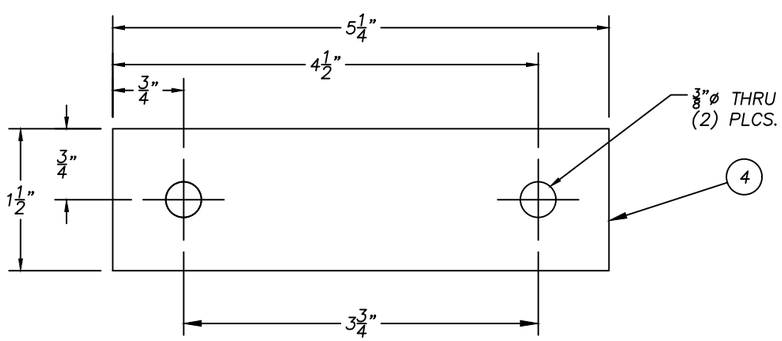

ITEM NO.	DRAWING NO.	DESCRIPTION	QUAN
5			
4		SPACER PLATE– 3/8in THK x 1 1/2 x 5 1/4in, SS	1
3		BALL VALVE– SS VALVE, TEFLON SEAT, SS BALL, 1/2 NPT	1
2		CLOSE NIPPLE– 1/2 NPT, SS	1
1		DRIP PAN– 16GA, SS	1

UNLESS OTHERWISE SPECIFIED
DIMENSIONS ARE ENGLISH (FEET AND/OR INCHES)
TOLERANCES

DECIMALS	INCHES	FEET	ANGLES
.X ±.030 .XX ±.015 .XXX ±.005	X"= ±1/16"	X'–X"=±1/4" UP TO 20 FEET X'–X"=±1/2" OVER 20 FEET	±1°

DO NOT SCALE DWG.
BREAK ALL SHARP EDGES

MATERIAL

FINISH

HAPMAN
Ideas that move

P.O. BOX 2321
6002 E. KILGORE ROAD, KALAMAZOO, MICHIGAN 49048
PHONE (269) 343–1675 FAX (269) 349–2477

DATE 6/11/13	JOB NO. .	DRAWN M. PORTER	
SCALE FULL		BOM = 0	DWG = 1

TITLE

DRIVE DRIP PAN
#16 GA. STAINLESS STEEL

CUST. .

(Q:\HAPMAN\LIBRARY)

SHEET	OF	DWG. NO.	REV.
1	1	9662–C	