No.	4D-38259

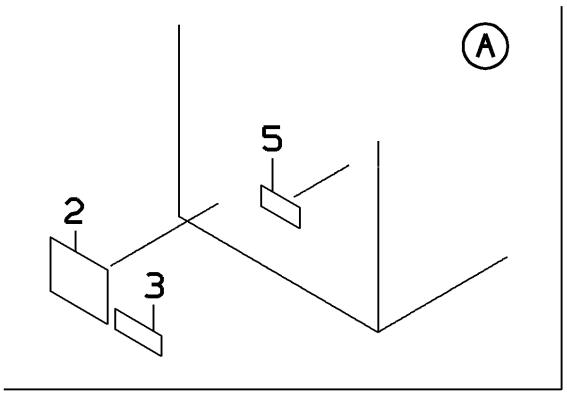

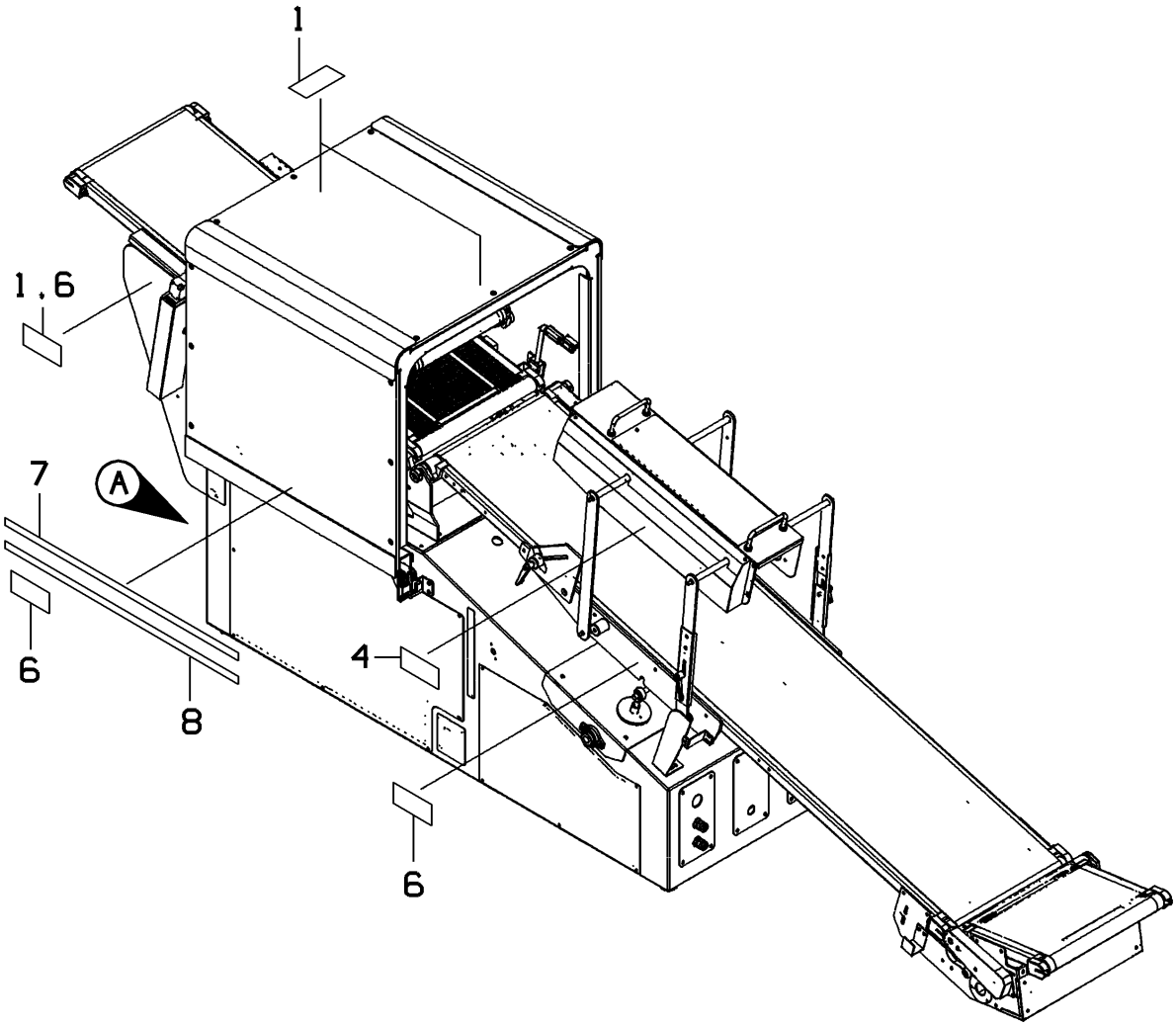

Scal 1:10

UNIT NAME	ACCESSORY UNIT::	DRAW NO.	4D-38259

NO.	PART CODE	PART NAME	QUANTITY
●	126-1204-02	ACCESSORY UNIT::	
1	054-2103-02	SEAL:SIGNAL:WARNING	2
2	026-8805-11	NAME PLATE:MODEL:	1
3	003-0873-16	NAME PLATE:COMPANY NAME:	1
4	063-1110-16	NAME PLATE::	1
5	054-2154-02	NAME PLATE:JUNCTION:	1
6	054-2104-15	SEAL:SIGNAL:JUNCTION	8
7	022-5970-04	NAME PLATE:SCALE:	1
8	113-3259-03	NAME PLATE:SCALE:	1

No. 4D-38260

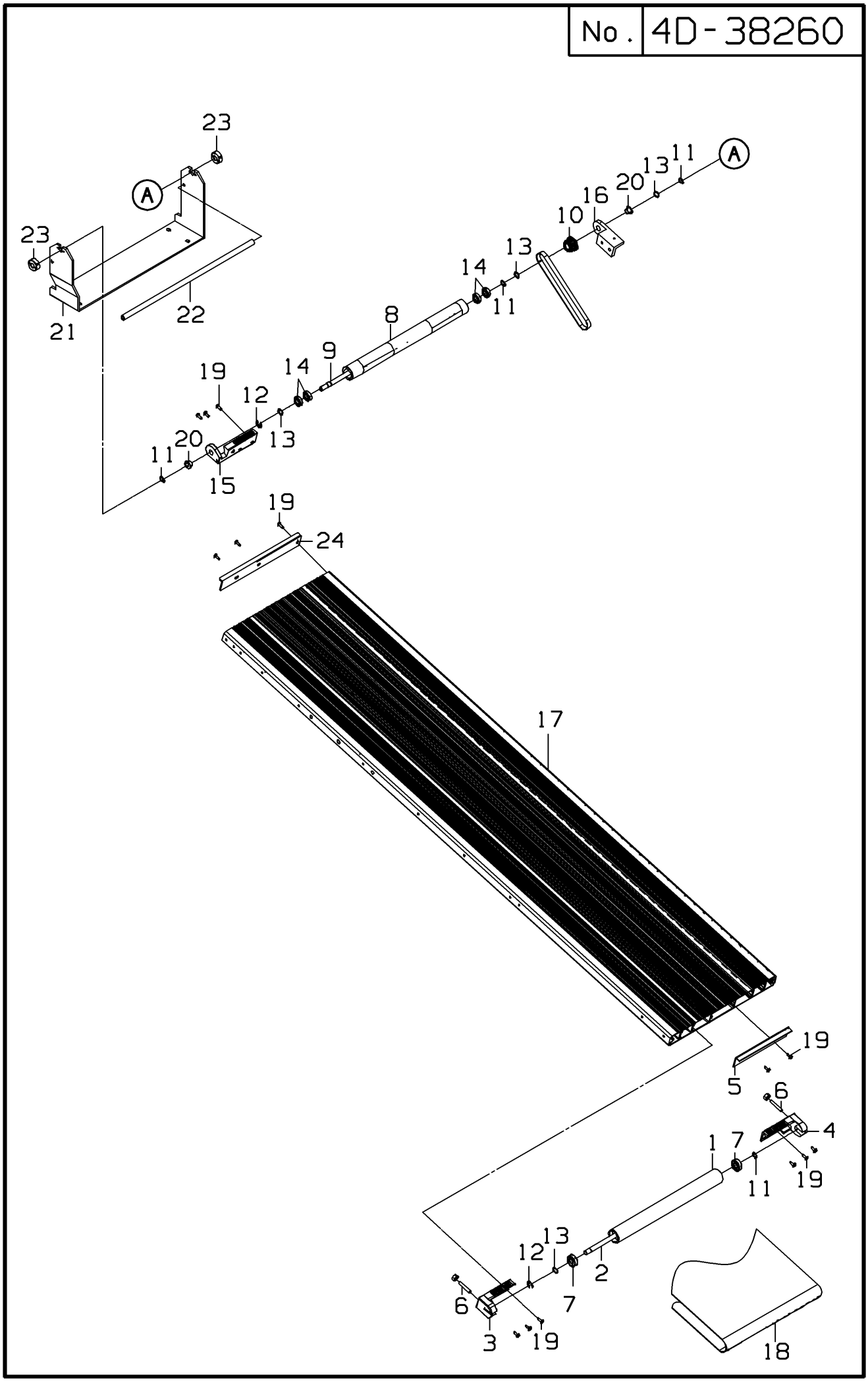

2009/2/17

UNIT NAME	CONVEYOR UNIT:TAKEAWAY:	DRAW NO.	4D-38260

NO.	PART CODE	PART NAME	QUANTITY
●	125-7914-08	CONVEYOR UNIT:TAKEAWAY:	
1	053-1202-16	ROLLER:FOLLOWER:	1
2	053-1227-00	SHAFT:ROLLER:FOLLOWER	1
3	052-8440-05	BRACKET:ROLLER:SFL	1
4	052-8443-06	BRACKET:ROLLER:SFR	1
5	053-2654-01	L PLATE B:PLATTER:L	1
6	057-5193-01	SET SCREW:HEX SOCKET:CUP POINT	2
7	051-4933-02	BEARING:RADIAL:DEEP GROOVE	2
8	122-5515-06	ROLLER:DRIVE:	1
9	122-5502-17	SHAFT:DRIVE:	1
10	109-7974-02	TIMING PULLEY:S5M:A	1
11	000-0453-04	C RING:FOR SHAFT:	4
12	000-0291-08	E RING::	2
13	004-7621-08	WAVE WASHER::	4
14	056-6033-04	BEARING:RADIAL:DEEP GROOVE	4
15	122-3035-08	BRACKET:ROLLER:SDL	1
16	122-3398-19	BRACKET:ROLLER:	1
17	122-5604-13	FRAME:CONVEYOR:	1
18	115-3394-08	FLAT BELT::FINGER JOINT	1
19	037-2702-07	TAPPING SCREW:CROSS TRUSS:T2	16
20	122-5503-01	BUSH:DU:FLANGE	2
21	125-7905-04	BRACKET:UP CONVER:	1
22	123-1843-10	THREADED ROD:ROUND:FF	1
23	122-5719-09	COLLAR A::	2
24	122-5793-05	L PLATE A:CONVEYOR:	1

No.	4D-38261

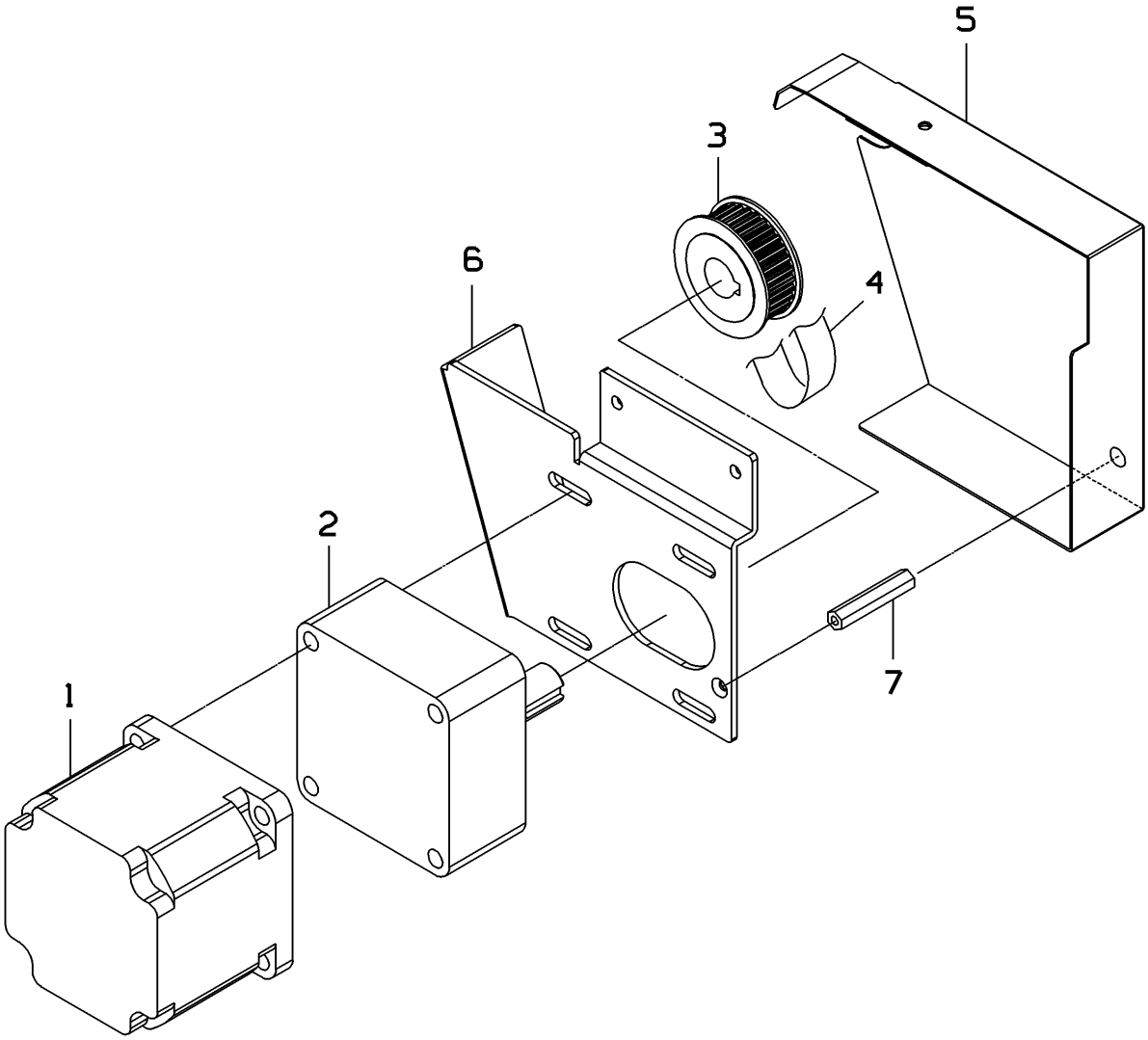

2009/2/17

UNIT NAME	MAIN BODY UNIT:UP CONVER:	DRAW NO.	4D-38261

NO.	PART CODE	PART NAME	QUANTITY
●	125-7903-07	MAIN BODY UNIT:UP CONVER:	
1	125-7913-04	MOTOR AS:SPEED CONTROLLER:	1
2	056-2722-02	GEAR HEAD::	1
3	073-7225-02	TIMING PULLEY:S5M:AF	1
4	033-3017-03	TIMING BELT:S5M:	1
5	125-7908-05	COVER:TIMING PULLEY:	1
6	125-7911-07	BRACKET:MOTOR:	1
7	125-1445-06	THREADED ROD:HEX:FF	1

No. 4D-38262

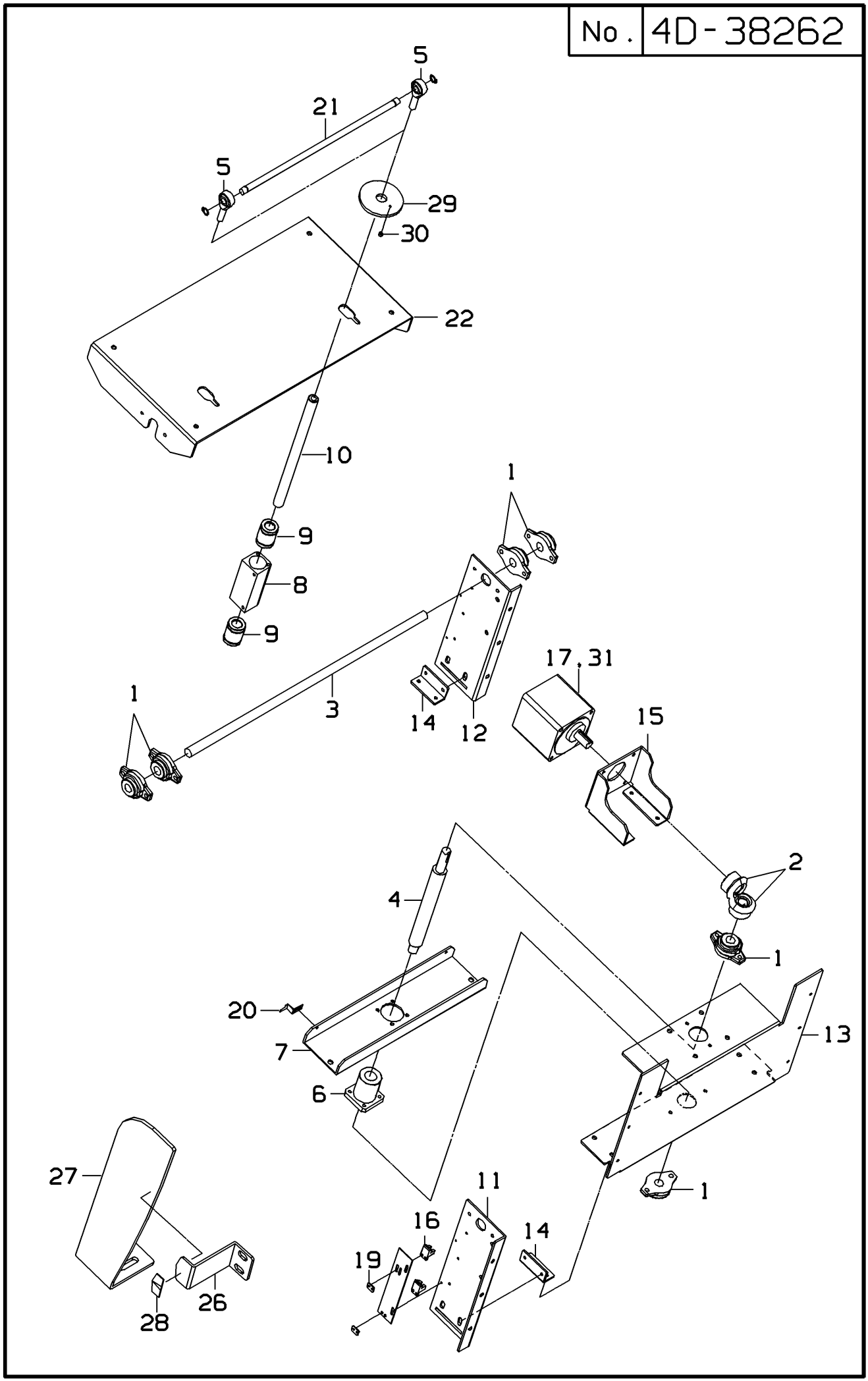

2009/2/19

UNIT NAME	ADJUST UNIT:CONVEYOR:	DRAW NO.	4D-38262

NO.	PART CODE	PART NAME	QUANTITY
●	123-9019-25	ADJUST UNIT:CONVEYOR:	
1	001-3917-03	BEARING UNIT:FLANGE:	6
2	106-7709-00	GEAR:CONE:	2
3	123-9005-14	SHAFT:ADJUSTER:	1
4	122-8761-16	THREADED ROD:TRAPEZOIDAL:	1
5	013-1353-00	ROD END:TYPE I:M	2
6	103-3363-09	NUT::FEED	1
7	122-8760-12	U PLATE B:SHAFT:	1
8	045-3931-01	HOUSING:LINEAR:	2
9	028-1518-02	BEARING:LINEAR BUSH:	4
10	122-8759-18	SHAFT:LINEAR:	2
11	122-8757-11	L PLATE B:SIDE:	1
12	122-8758-14	L PLATE B:SIDE:	1
13	122-8755-13	BASE:ADJUSTER:	1
14	122-8754-01	L PLATE A::	2
15	122-8753-07	BRACKET:MOTOR:	1
16	069-4941-00	PHOTO INTERRUPTOR:TRANS:	2
17	109-9323-05	MOTOR:SPEED CONTROLLER:	1
18	123-0404-14	PLATE B:SQUARE:	1
19	123-0402-17	PLATE A:SQUARE:	2
20	123-0403-01	CRANK PLATE B:DOG:	1
21	125-1377-06	SHAFT:ROD:END	1
22	123-9176-18	BRACKET:ADJUSTER:	1
23	123-6325-15	HARNESS:C2:MOTOR JUNCTION	1
24	123-6404-07	HARNESS:C2:PHOTO SENSOR	1
25	123-6405-01	HARNESS:C2:PHOTO SENSOR	1
26	125-7868-00	BRACKET:POINT PLATE:	1
27	125-7869-03	BRACKET:SCALE:	1
28	116-8411-03	POINT PLATE::	1
29	123-0449-02	PLATE A:ROUND:	2
30	094-0174-15	COLLAR::	2
31	096-4543-06	GEAR HEAD::	1

No.	4D-38263

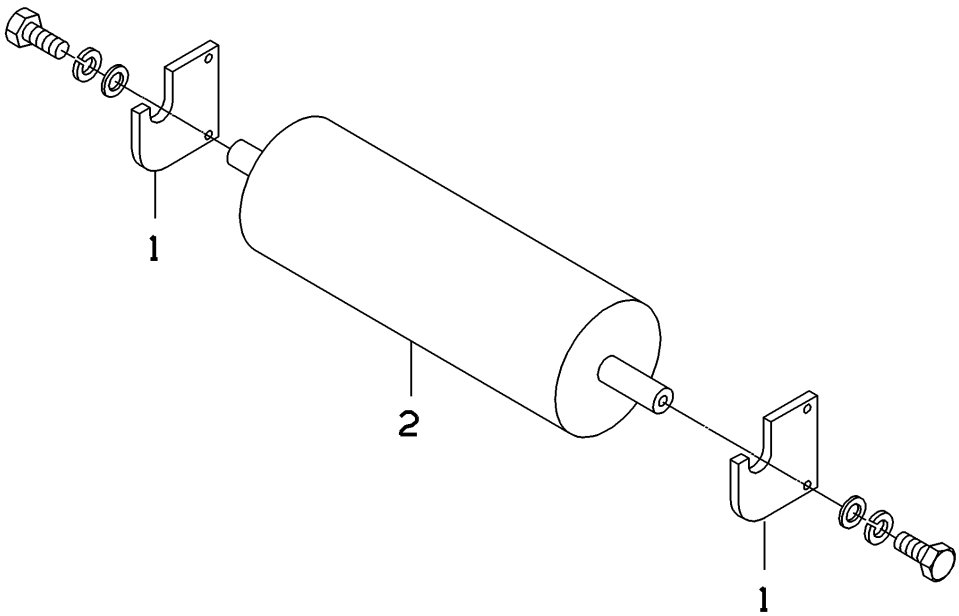

Scal 1:4

UNIT NAME	CLEANING UNIT::	DRAW NO.	4D-38263

NO.	PART CODE	PART NAME	QUANTITY
●	123-0201-06	CLEANING UNIT::	
1	122-5603-01	BLOCK B:BRUSH:	2
2	110-5234-06	BRUSH:CLEANING:	1

No. 4D-38264

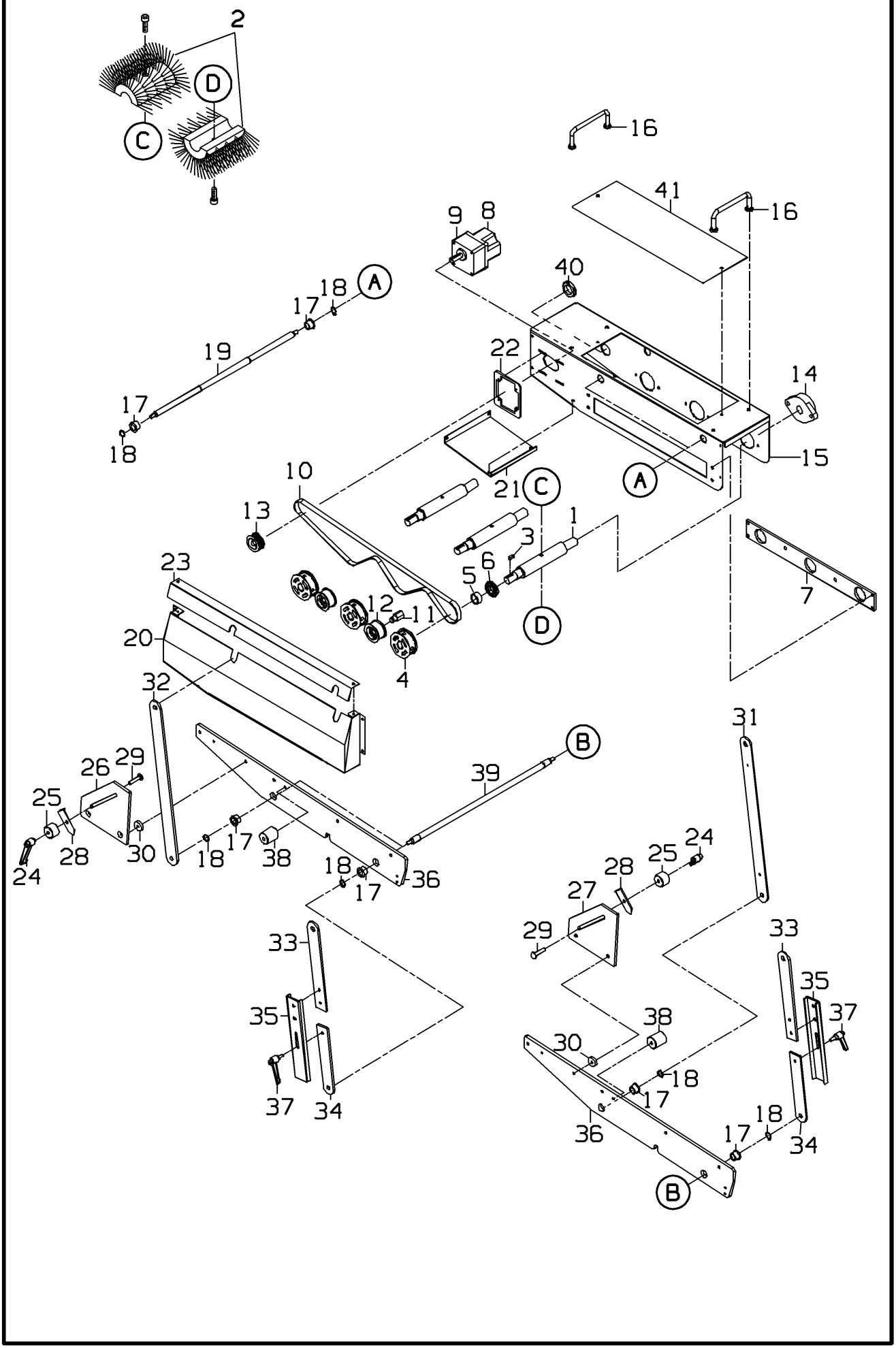

2009/2/23

UNIT NAME	CONDITIONING UNIT:BRUSH:	DRAW NO.	4D-38264

NO.	PART CODE	PART NAME	QUANTITY
●	123-1661-28	CONDITIONING UNIT:BRUSH:	
1	109-9046-03	SHAFT:BRUSH:	3
2	110-5235-00	BRUSH::	3
3	006-4463-00	KEY:PARALLEL:BOTH ENDS ROUND	3
4	073-7226-06	TIMING PULLEY:S5M:AF	3
5	099-8041-00	COLLAR::	3
6	108-2629-01	BEARING:RADIAL:DEEP GROOVE	3
7	099-8042-12	PLATE B:HOUSING:	1
8	110-2030-02	MOTOR:SPEED CONTROLLER:	1
9	093-7247-02	GEAR HEAD::	1
10	099-8040-06	TIMING BELT:S5M:	1
11	041-4322-17	SHAFT:TENSION:	2
12	045-3957-08	PULLEY:IDLER:	2
13	045-3709-01	TIMING PULLEY:S5M:AF	1
14	004-1435-00	BEARING UNIT:FLANGE:	3
15	124-9013-02	FRAME:SMOOTHER:	1
16	073-6919-00	HANDLE::	2
17	006-3389-03	BUSH::	8
18	051-5731-01	C RING:FOR SHAFT:	8
19	123-1637-19	SHAFT:LINK:BRUSH	2
20	124-9396-09	COVER:TIMING BELT:	1
21	124-9394-01	COVER:SMOOTHER:	1
22	124-9390-07	PLATE B:MOTOR:	1
23	124-9392-04	COVER:TIMING BELT:	1
24	054-7229-06	LEVER:CLAMP:	2
25	124-9399-00	STOPPER:SMOOTHER:	2
26	122-8584-13	PLATE B:LINK:	1
27	122-8585-17	PLATE B:LINK:	1
28	123-1631-08	L PLATE B:SCALE:	2
29	063-3756-00	CUP HEAD SQ NECK BOLT:A:T1	2
30	063-0539-07	COLLAR::	4
31	125-1188-09	LINK:BRUSH:1	1
32	122-5957-09	LINK:BRUSH:1	1
33	122-5956-05	LINK:BRUSH:2	2
34	122-5959-06	LINK:BRUSH:3	2
35	118-3349-01	U PLATE B:LINK:	2

No. 4D-38264

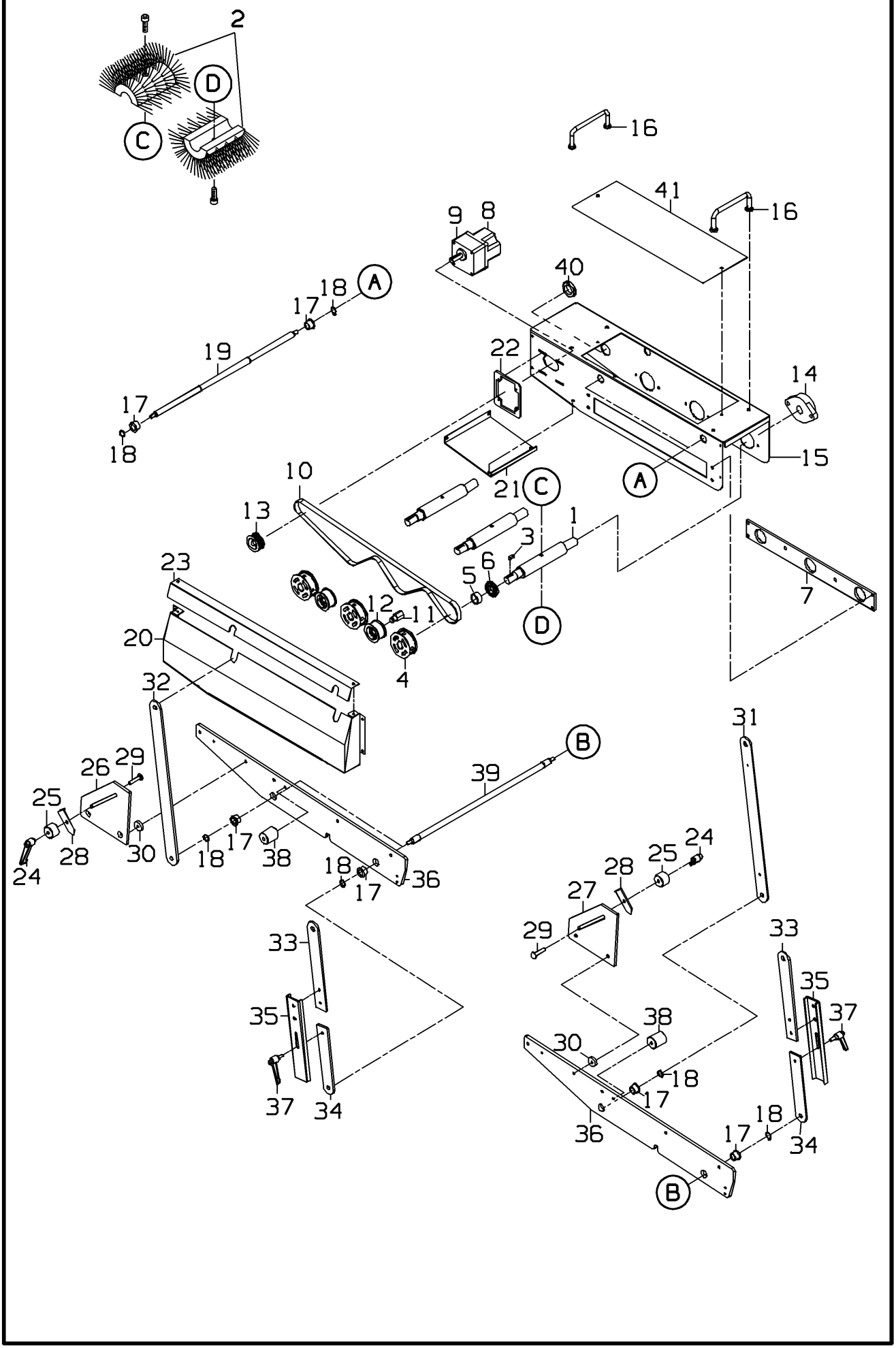

2009/2/23

UNIT NAME	CONDITIONING UNIT:BRUSH:	DRAW NO.	4D-38264

NO.	PART CODE	PART NAME	QUANTITY
●	123-1661-28	CONDITIONING UNIT:BRUSH:	
36	125-1108-01	FRAME:SIDE:	2
37	059-8023-06	LEVER:CLAMP:	2
38	124-9400-01	STOPPER:SMOOTHER:	2
39	125-1104-06	SHAFT:LINK:UNDER	2
40	053-1582-02	ACCESSORY:LOCK NUT:	2
41	125-7893-03	COVER:BRUSH:	1

No.	4D-38265

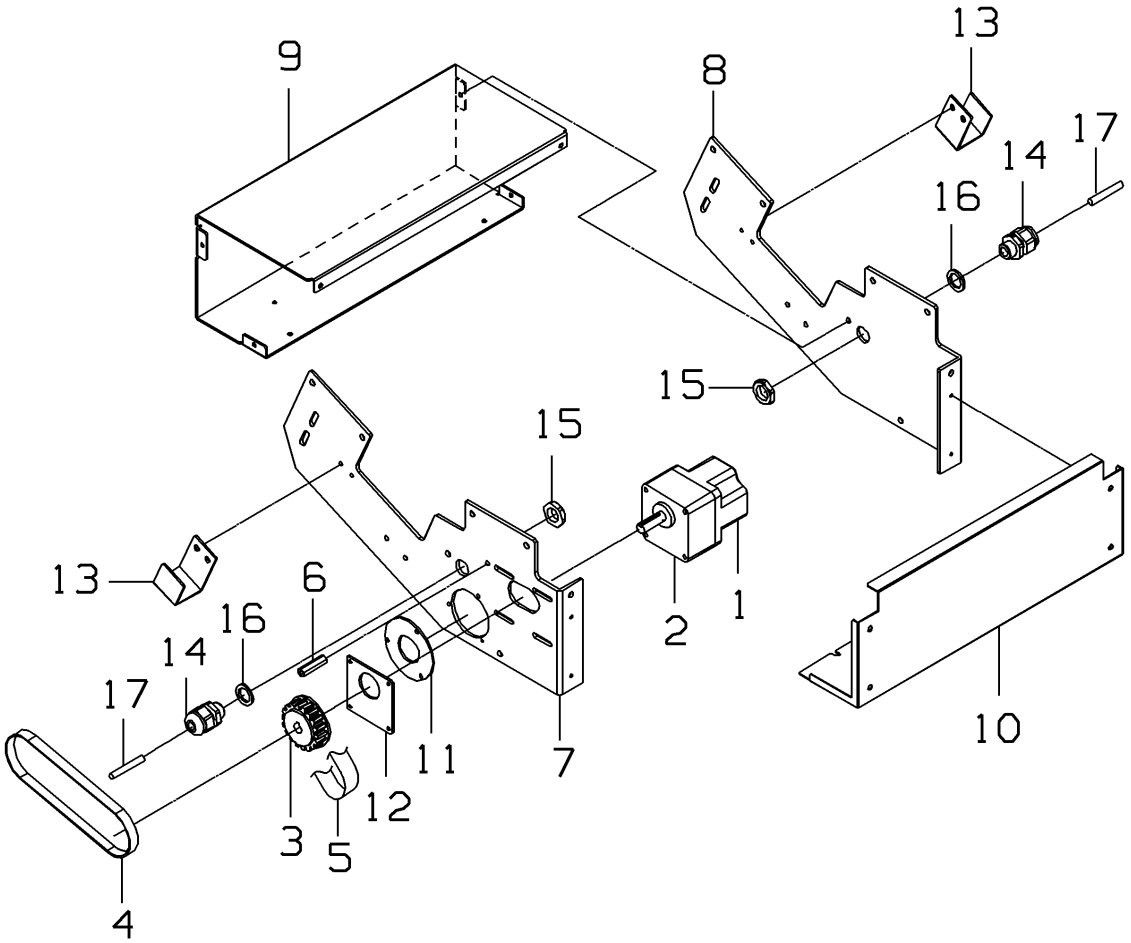

2009/2/17

UNIT NAME	MAIN BODY UNIT:CHUTE:	DRAW NO.	4D-38265

NO.	PART CODE	PART NAME	QUANTITY
●	125-7945-03	MAIN BODY UNIT:CHUTE:	
1	110-2030-02	MOTOR:SPEED CONTROLLER:	1
2	093-7247-02	GEAR HEAD::	1
3	107-2710-03	TIMING PULLEY:S5M:	1
4	040-7256-09	TIMING BELT:S5M:	1
5	125-7942-02	COVER:TIMING BELT:	1
6	109-7989-08	THREADED ROD:HEX:FF	1
7	125-7933-09	BRACKET:CONVEYOR:CHUTE	1
8	125-7936-00	BRACKET:CONVEYOR:CHUTE	1
9	125-7938-07	BRACKET:COVER:	1
10	125-7939-01	COVER:CHUTE:	1
11	125-7946-07	PLATE A::	1
12	125-7947-01	PLATE A:MOTOR:	1
13	115-5839-05	HOLDER:FLEXIBLE:	2
14	050-2256-00	ACCESSORY:BUSH:SKINTOP	2
15	050-2259-01	ACCESSORY:LOCK NUT:	2
16	059-7555-07	ACCESSORY:PACKING:	2
17	018-1714-07	CAP:SUPER LOCK:	2

No. 4D-38266

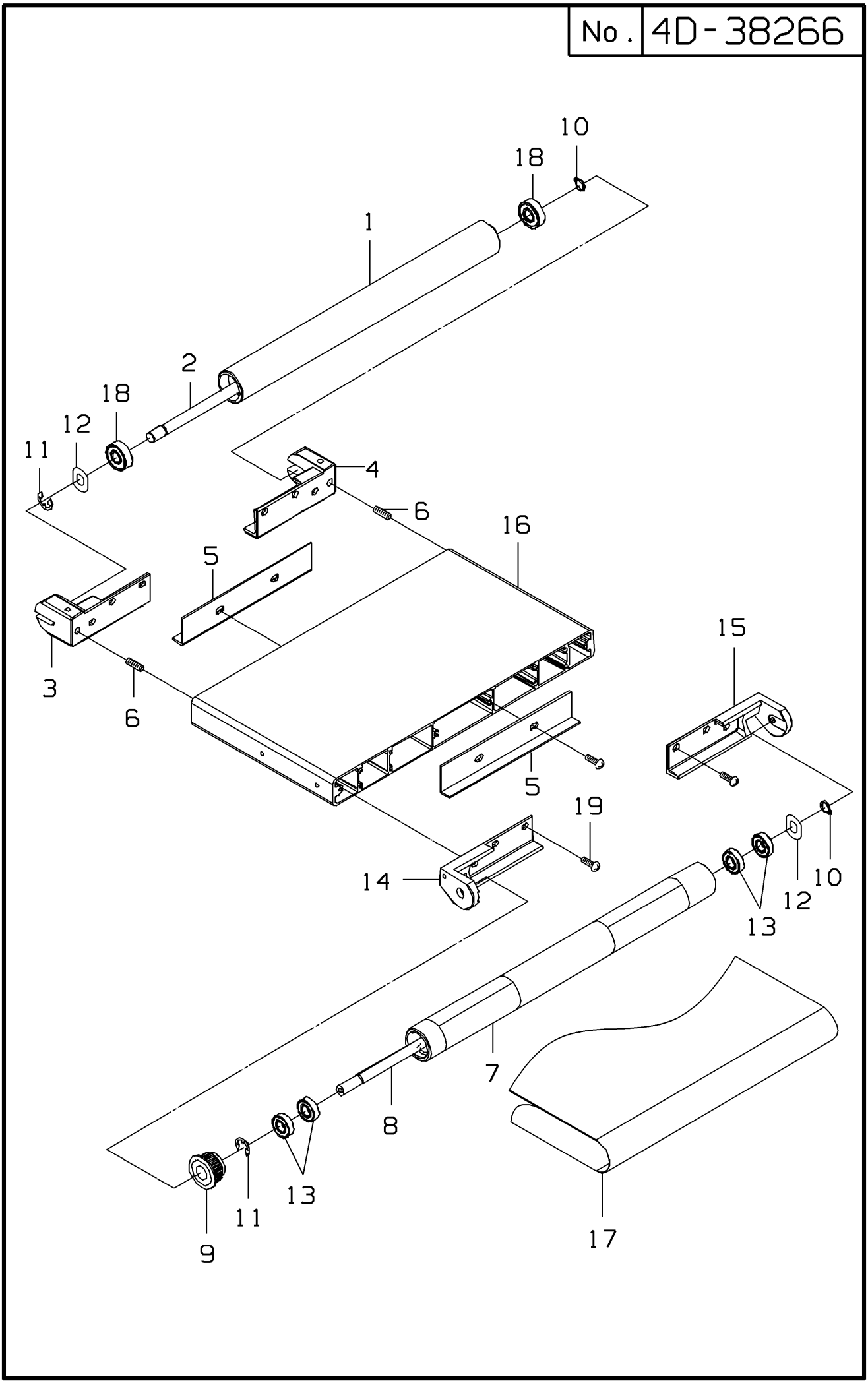

2009/2/17

UNIT NAME	CONVEYOR UNIT:CHUTE:	DRAW NO.	4D-38266

NO.	PART CODE	PART NAME	QUANTITY
●	122-5729-15	CONVEYOR UNIT:CHUTE:	
1	053-1202-16	ROLLER:FOLLOWER:	1
2	053-1227-00	SHAFT:ROLLER:FOLLOWER	1
3	052-8440-05	BRACKET:ROLLER:SFL	1
4	052-8443-06	BRACKET:ROLLER:SFR	1
5	053-2654-01	L PLATE B:PLATTER:L	2
6	057-5193-01	SET SCREW:HEX SOCKET:CUP POINT	2
7	122-5516-00	ROLLER:DRIVE:	1
8	122-5508-00	SHAFT:DRIVE:	1
9	109-7975-06	TIMING PULLEY:S5M:A	1
10	008-3343-07	C RING:FOR SHAFT:	2
11	000-0291-08	E RING::	2
12	004-7621-08	WAVE WASHER::	2
13	056-6033-04	BEARING:RADIAL:DEEP GROOVE	4
14	052-8434-02	BRACKET:ROLLER:SDL	1
15	052-8437-03	BRACKET:ROLLER:SDR	1
16	122-5507-06	FRAME:CONVEYOR:	1
17	115-4565-01	FLAT BELT::	1
18	051-4933-02	BEARING:RADIAL:DEEP GROOVE	2
19	076-0235-06	TAPPING SCREW:CROSS TRUSS:T2	16