REFERENCE DRAWINGS

NOTE: BEFORE WORKING, CLEANING OR MAINTAINING THE EQUIPMENT, IT IS HIGHLY IMPORTANT TO LOCK OUT ALL OF THE ENERGY SOURCES ACCORDING TO OSHA (OR LOCAL SAFETY) REGULATIONS. ONLY PEOPLE WITH THE PROPER QUALIFICATIONS, TRAINING, AND AUTHORITY FROM THE MANAGEMENT SHALL WORK OR MAINTAIN THIS EQUIPMENT.

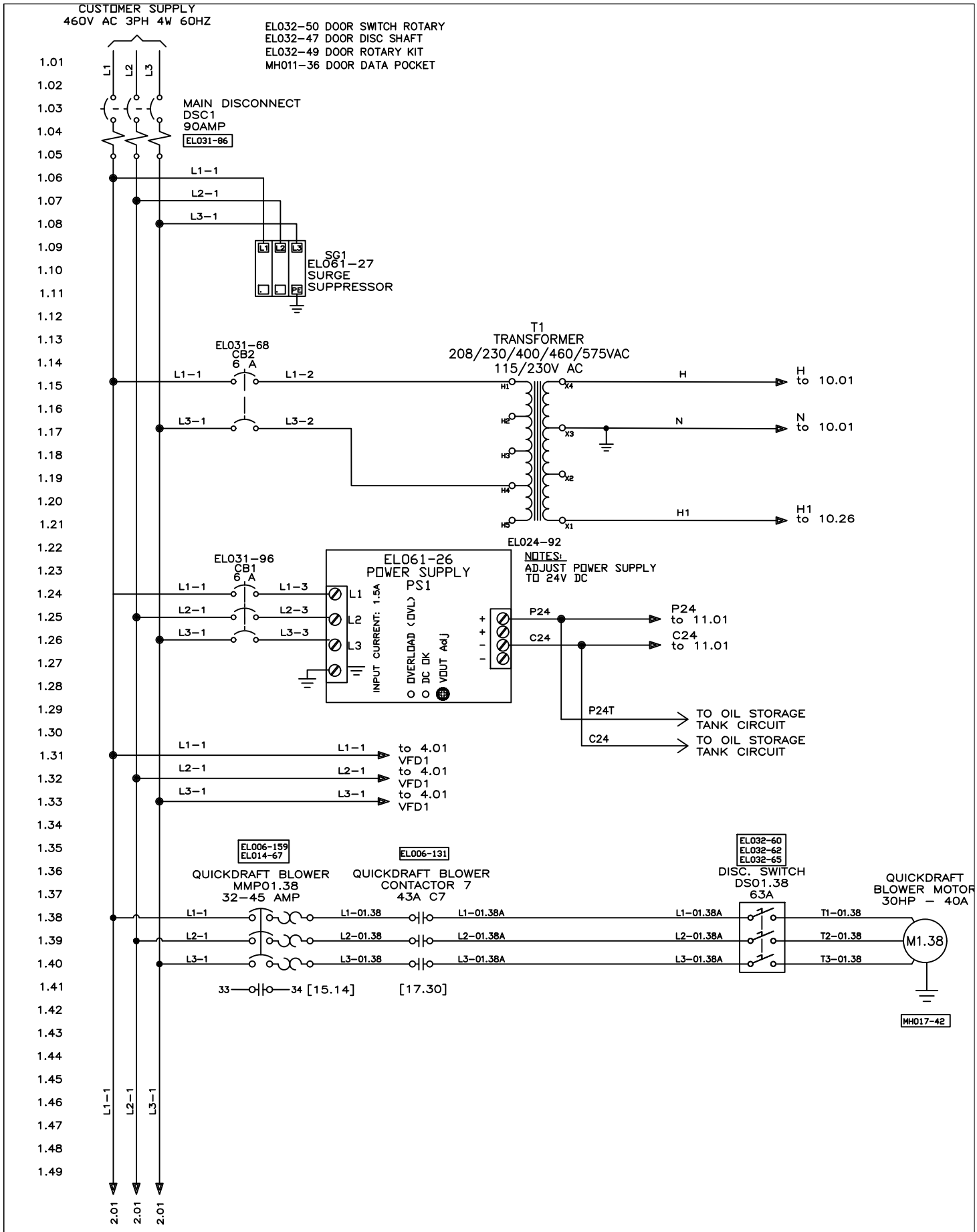

d)				DRAWN BY BP/EP	DATE 6/5/24
c)				CHECKED BY	DATE
b)				APPROVED BY	DATE
a)				ISSUED BY	DATE
NO	DESCRIPTION	BY	DATE		
REVISIONS				APPROVALS	

LAWRENCE EQUIPMENT

2034 NORTH PECK ROAD
SO. EL MONTE, CALIFORNIA 91833
(626) 442-2894 TELEX 704116
TOLL FREE (800) 422-4500

CHIP FRYER A/C DRIVEN, COMPACT LOGIC
0CF6018-03
CONTROL ENCLOSURE

DRAWING NO. 0CF187 REV

SHEET 1 OF 22

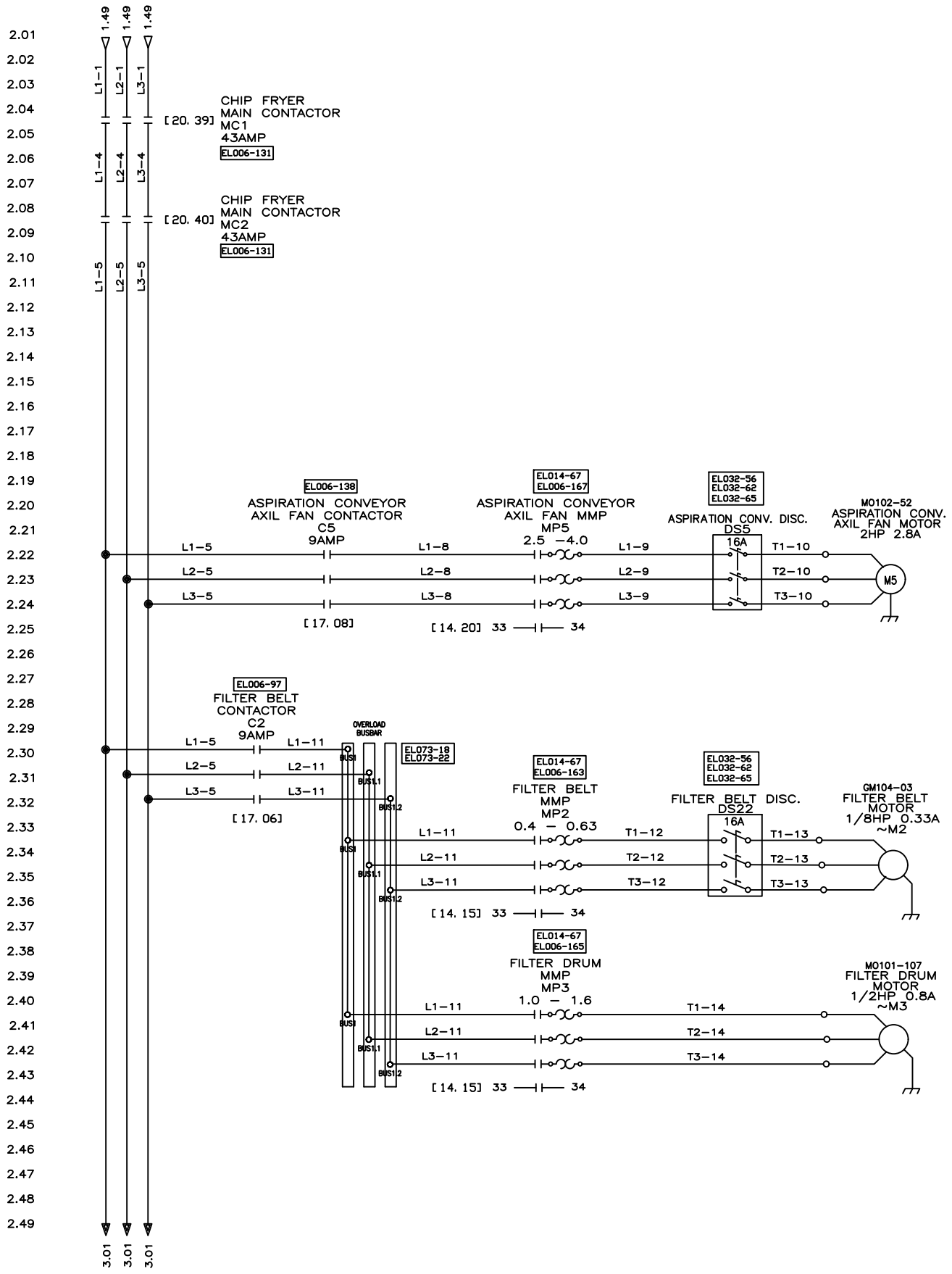

NO	DESCRIPTION	BY	DATE
d)			
c)			
b)			
a)			

REVISIONS

DRAWN BY BP/EP	DATE 6/5/24
CHECKED BY	DATE
APPROVED BY	DATE
ISSUED BY	DATE

APPROVALS

LAWRENCE EQUIPMENT

2034 NORTH PECK ROAD
SO. EL MONTE, CALIFORNIA 91833
(626) 442-2894 TELEX 704116
TOLL FREE (800) 422-4500

CHIP FRYER A/C DRIVEN, COMPACT LOGIC
OCF6018-03
CONTROL ENCLOSURE

DRAWING NO. OCF187
REV
SHEET 2 OF 22

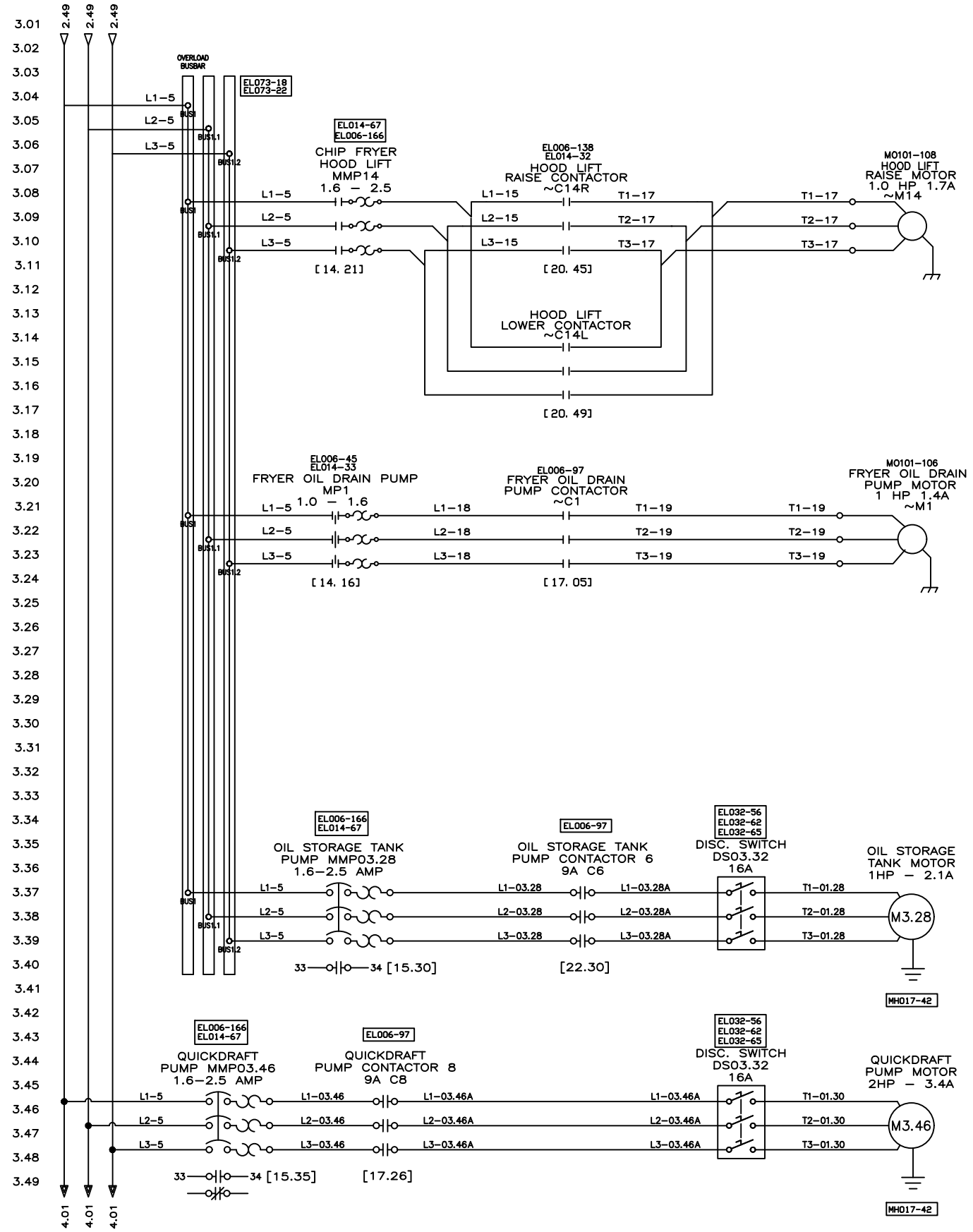

NO	DESCRIPTION	BY	DATE
d)			
c)			
b)			
a)			

REVISIONS

DRAWN BY BP/EP	DATE 6/5/24
CHECKED BY	DATE
APPROVED BY	DATE
ISSUED BY	DATE

APPROVALS

LAWRENCE EQUIPMENT
2034 NORTH PECK ROAD
SO. EL MONTE, CALIFORNIA 91833
(626) 442-2894 TELEX 704116
TOLL FREE (800) 422-4500

CHIP FRYER A/C DRIVEN, COMPACT LOGIC
OCF6018-03
CONTROL ENCLOSURE

DRAWING NO. OCF187 REV

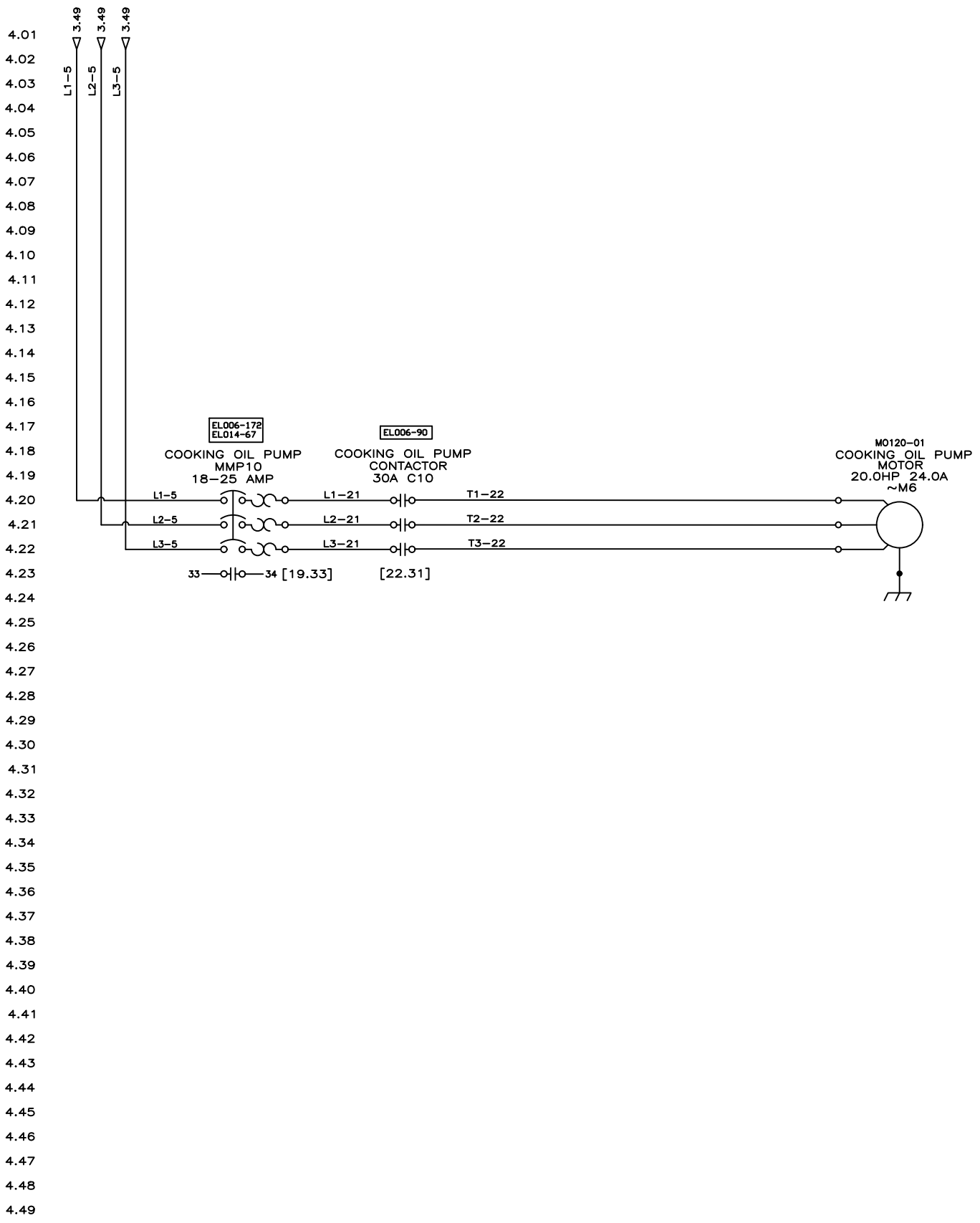

d)				DRAWN BY BP/EP	DATE 6/5/24
c)				CHECKED BY	DATE
b)				APPROVED BY	DATE
a)				ISSUED BY	DATE
NO	DESCRIPTION	BY	DATE		
REVISIONS				APPROVALS	

LAWRENCE EQUIPMENT

2034 NORTH PECK ROAD
SO. EL MONTE, CALIFORNIA 91833
(626) 442-2894 TELEX 704116
TOLL FREE (800) 422-4500

CHIP FRYER A/C DRIVEN, COMPACT LOGIC
OCF6018-03
CONTROL ENCLOSURE

DRAWING NO. OCF187 REV

SHEET 4 OF 22

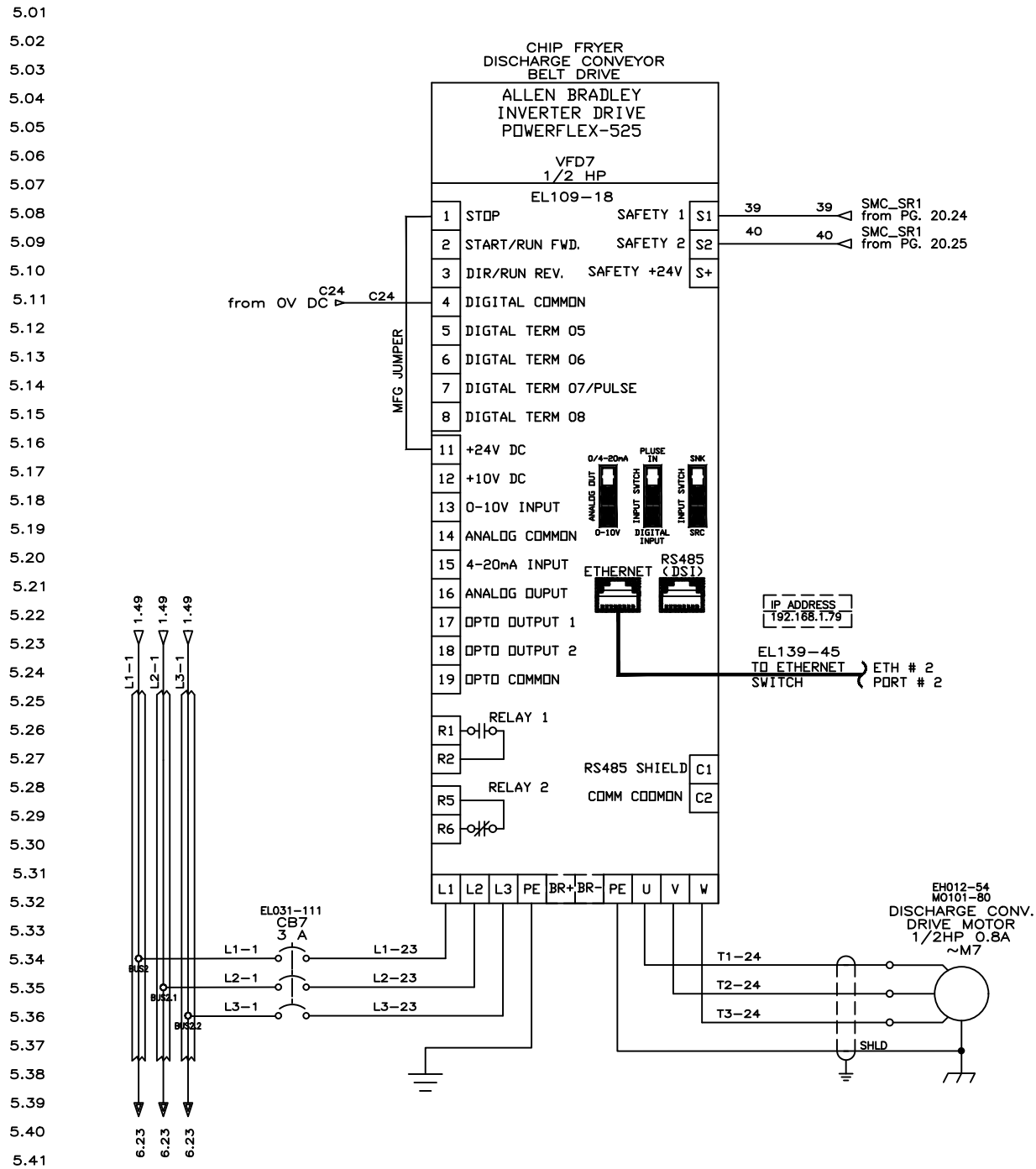

DISCHARGE CONV. DRIVE

A/C DRIVE SET-UP		
C128	EN ADDR SEL	1
C129	EN IP ADDR CFG 1	192
C130	EN IP ADDR CFG 2	168
C131	EN IP ADDR CFG 3	1
C132	EN IP ADDR CFG 4	79

NO	DESCRIPTION	BY	DATE
d)			
c)			
b)			
a)			

REVISIONS

DRAWN BY BP/EP	DATE 6/5/24
CHECKED BY	DATE
APPROVED BY	DATE
ISSUED BY	DATE

APPROVALS

LAWRENCE EQUIPMENT
2034 NORTH PECK ROAD
SO. EL MONTE, CALIFORNIA 91833
(626) 442-2894 TELEX 704116
TOLL FREE (800) 422-4500

CHIP FRYER A/C DRIVEN, COMPACT LOGIC
OCF6018-03
CONTROL ENCLOSURE

DRAWING NO. OCF187 REV

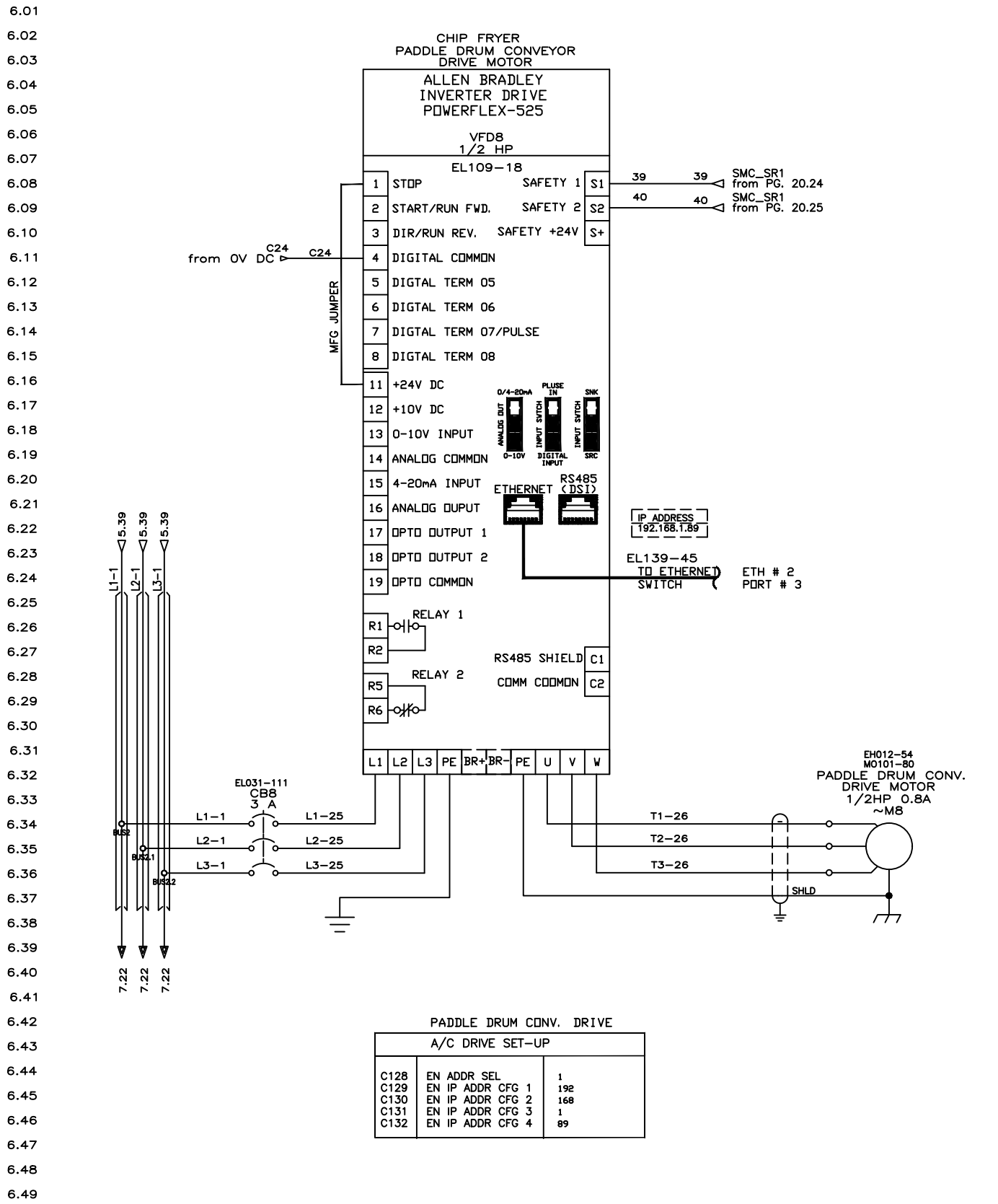

PADDLE DRUM CONV. DRIVE

A/C DRIVE SET-UP		
C128	EN ADDR SEL	1
C129	EN IP ADDR CFG 1	192
C130	EN IP ADDR CFG 2	168
C131	EN IP ADDR CFG 3	1
C132	EN IP ADDR CFG 4	89

NO	DESCRIPTION	BY	DATE
d)			
c)			
b)			
a)			

REVISIONS

DRAWN BY BP/EP	DATE 6/5/24	
CHECKED BY	DATE	
APPROVED BY	DATE	
ISSUED BY	DATE	

APPROVALS

LAWRENCE EQUIPMENT

2034 NORTH PECK ROAD
SO. EL MONTE, CALIFORNIA 91833
(626) 442-2894 TELEX 704116
TOLL FREE (800) 422-4500

CHIP FRYER A/C DRIVEN, COMPACT LOGIC
OCF6018-03
CONTROL ENCLOSURE

DRAWING NO. OCF187 REV

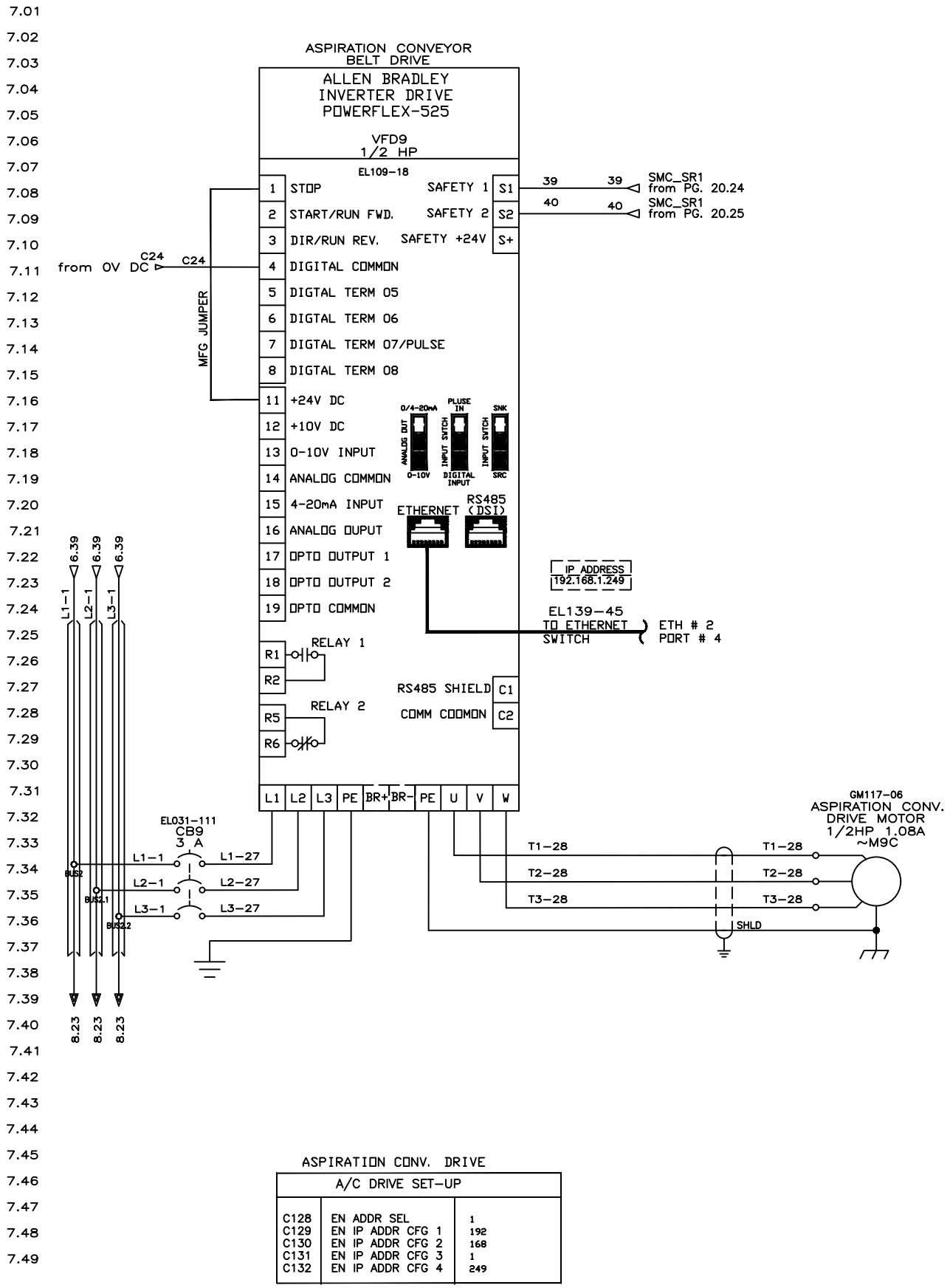

ASPIRATION CONV. DRIVE

A/C DRIVE SET-UP		
C128	EN ADDR SEL	1
C129	EN IP ADDR CFG 1	192
C130	EN IP ADDR CFG 2	168
C131	EN IP ADDR CFG 3	1
C132	EN IP ADDR CFG 4	249

NO	DESCRIPTION	BY	DATE
d)			
c)			
b)			
a)			

REVISIONS

DRAWN BY BP/EP	DATE 6/5/24
CHECKED BY	DATE
APPROVED BY	DATE
ISSUED BY	DATE

APPROVALS

LAWRENCE EQUIPMENT
2034 NORTH PECK ROAD
SO. EL MONTE, CALIFORNIA 91833
(626) 442-2894 TELEX 704116
TOLL FREE (800) 422-4500

CHIP FRYER A/C DRIVEN, COMPACT LOGIC
OCF6018-03
CONTROL ENCLOSURE

DRAWING NO. OCF187 REV

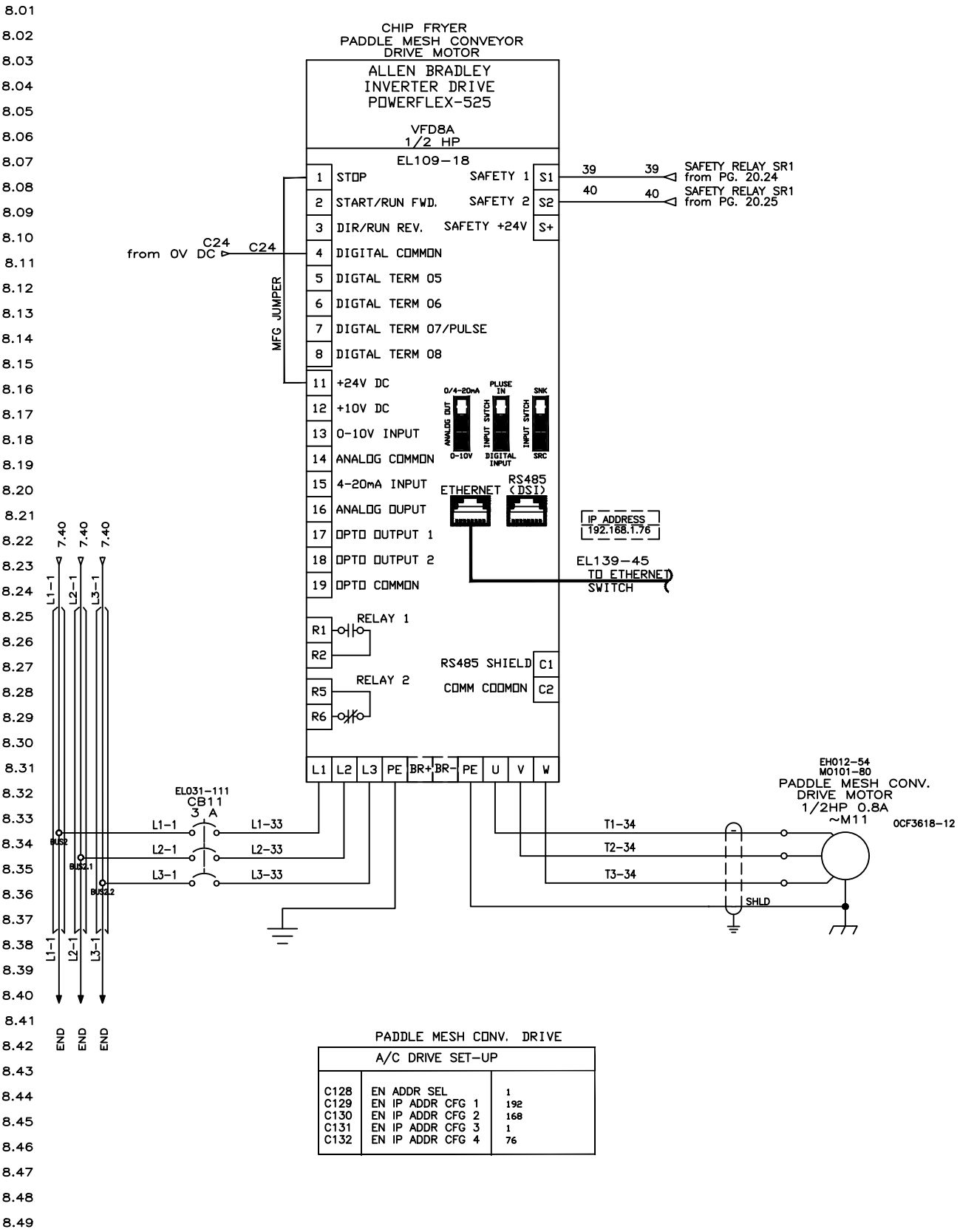

PADDLE MESH CONV. DRIVE

A/C DRIVE SET-UP		
C128	EN ADDR SEL	1
C129	EN IP ADDR CFG 1	192
C130	EN IP ADDR CFG 2	168
C131	EN IP ADDR CFG 3	1
C132	EN IP ADDR CFG 4	76

NO	DESCRIPTION	BY	DATE
d)			
c)			
b)			
a)			

REVISIONS

DRAWN BY BP/EP	DATE 6/5/24
CHECKED BY	DATE
APPROVED BY	DATE
ISSUED BY	DATE

APPROVALS

LAWRENCE EQUIPMENT

2034 NORTH PECK ROAD
SO. EL MONTE, CALIFORNIA 91833
(626) 442-2894 TELEX 704116
TOLL FREE (800) 422-4500

CHIP FRYER A/C DRIVEN, COMPACT LOGIC
0CF6018-03
CONTROL ENCLOSURE

DRAWING NO. 0CF187 REV

SHEET 8 OF 22

9.01
9.02
9.03
9.04
9.05
9.06
9.07
9.08
9.09
9.10
9.11
9.12
9.13
9.14
9.15
9.16
9.17
9.18
9.19
9.20
9.21
9.22
9.23
9.24
9.25
9.26
9.27
9.28
9.29
9.30
9.31
9.32
9.33
9.34
9.35
9.36
9.37
9.38
9.39
9.40
9.41
9.42
9.43
9.44
9.45
9.46
9.47
9.48
9.49

PAGE LEFT BLANK
INTENTIONALLY

NO	DESCRIPTION	BY	DATE
d)			
c)			
b)			
a)			

REVISIONS

DRAWN BY BP/EP	DATE 6/5/24
CHECKED BY	DATE
APPROVED BY	DATE
ISSUED BY	DATE

APPROVALS

LAWRENCE EQUIPMENT
2034 NORTH PECK ROAD
SO. EL MONTE, CALIFORNIA 91833
(626) 442-2894 TELEX 704116
TOLL FREE (800) 422-4500

CHIP FRYER A/C DRIVEN, COMPACT LOGIC
OCF6018-03
CONTROL ENCLOSURE

DRAWING NO. OCF187
REV
SHEET 9 OF 22

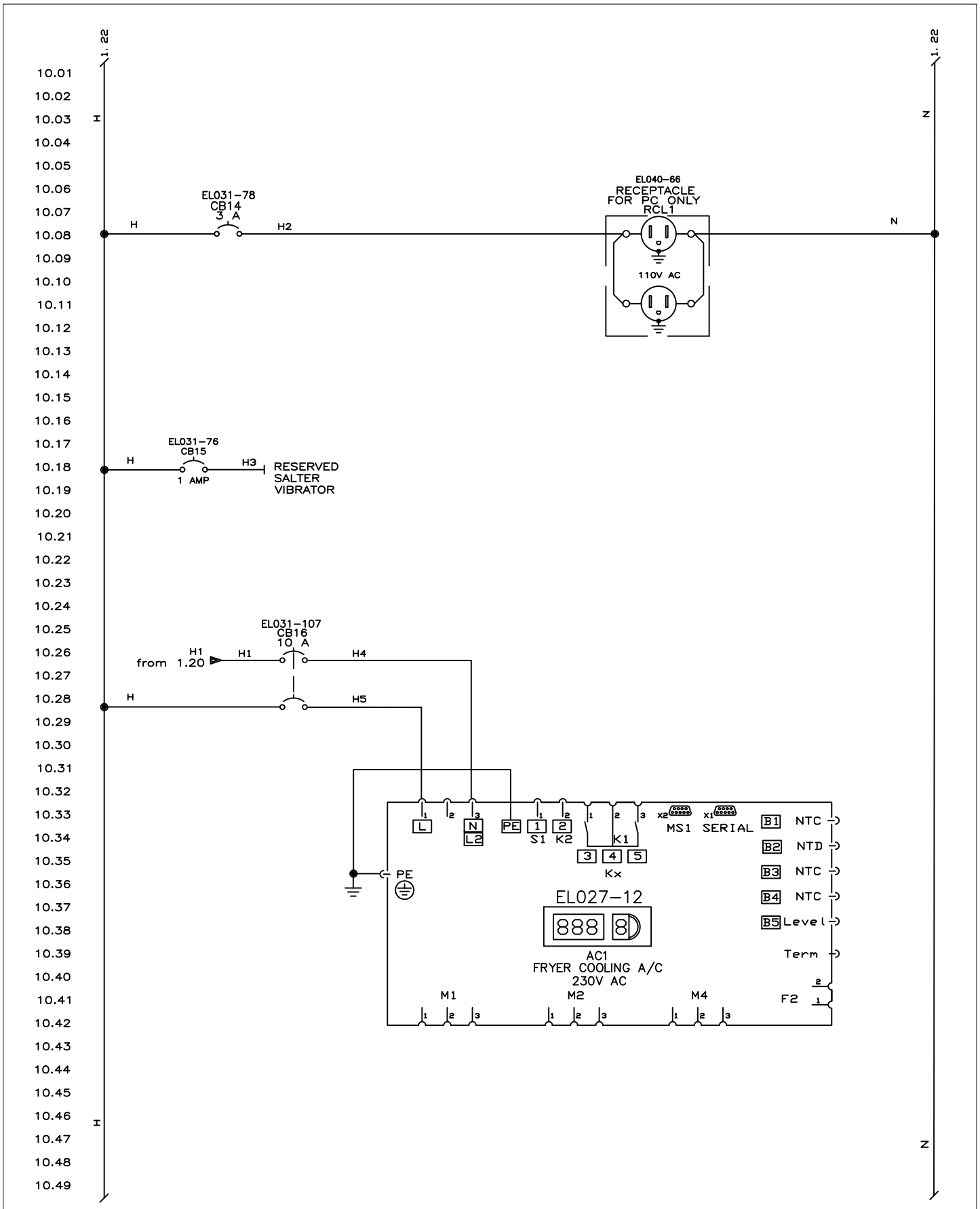

d)				DRAWN BY BP/EP	DATE 6/5/24
c)				CHECKED BY	DATE
b)				APPROVED BY	DATE
a)				ISSUED BY	DATE
NO	DESCRIPTION	BY	DATE		
REVISIONS				APPROVALS	

LAWRENCE EQUIPMENT

2034 NORTH PECK ROAD
SO. EL MONTE, CALIFORNIA 91833
(626) 442-2894 TELEX 704116
TOLL FREE (800) 422-4500

CHIP FRYER A/C DRIVEN, COMPACT LOGIC
OCF6018-03
CONTROL ENCLOSURE

DRAWING NO. OCF187
REV
SHEET 10 OF 22

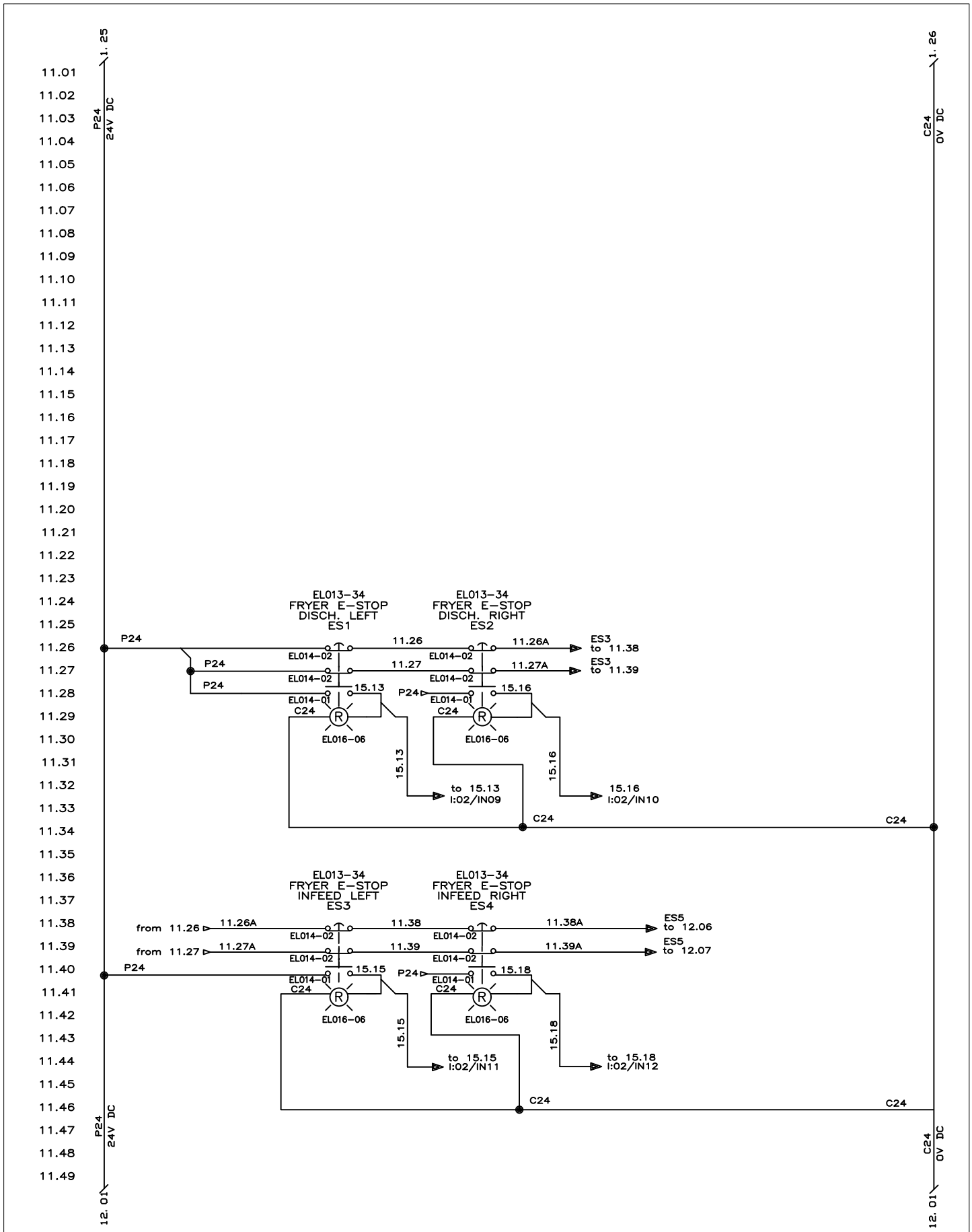

d)				DRAWN BY BP/EP	DATE 6/5/24
c)				CHECKED BY	DATE
b)				APPROVED BY	DATE
a)				ISSUED BY	DATE
NO	DESCRIPTION	BY	DATE		
REVISIONS				APPROVALS	

LAWRENCE EQUIPMENT

2034 NORTH PECK ROAD
SO. EL MONTE, CALIFORNIA 91833
(626) 442-2894 TELEX 704116
TOLL FREE (800) 422-4500

CHIP FRYER A/C DRIVEN, COMPACT LOGIC
OCF6018-03
CONTROL ENCLOSURE

DRAWING NO. OCF187 REV

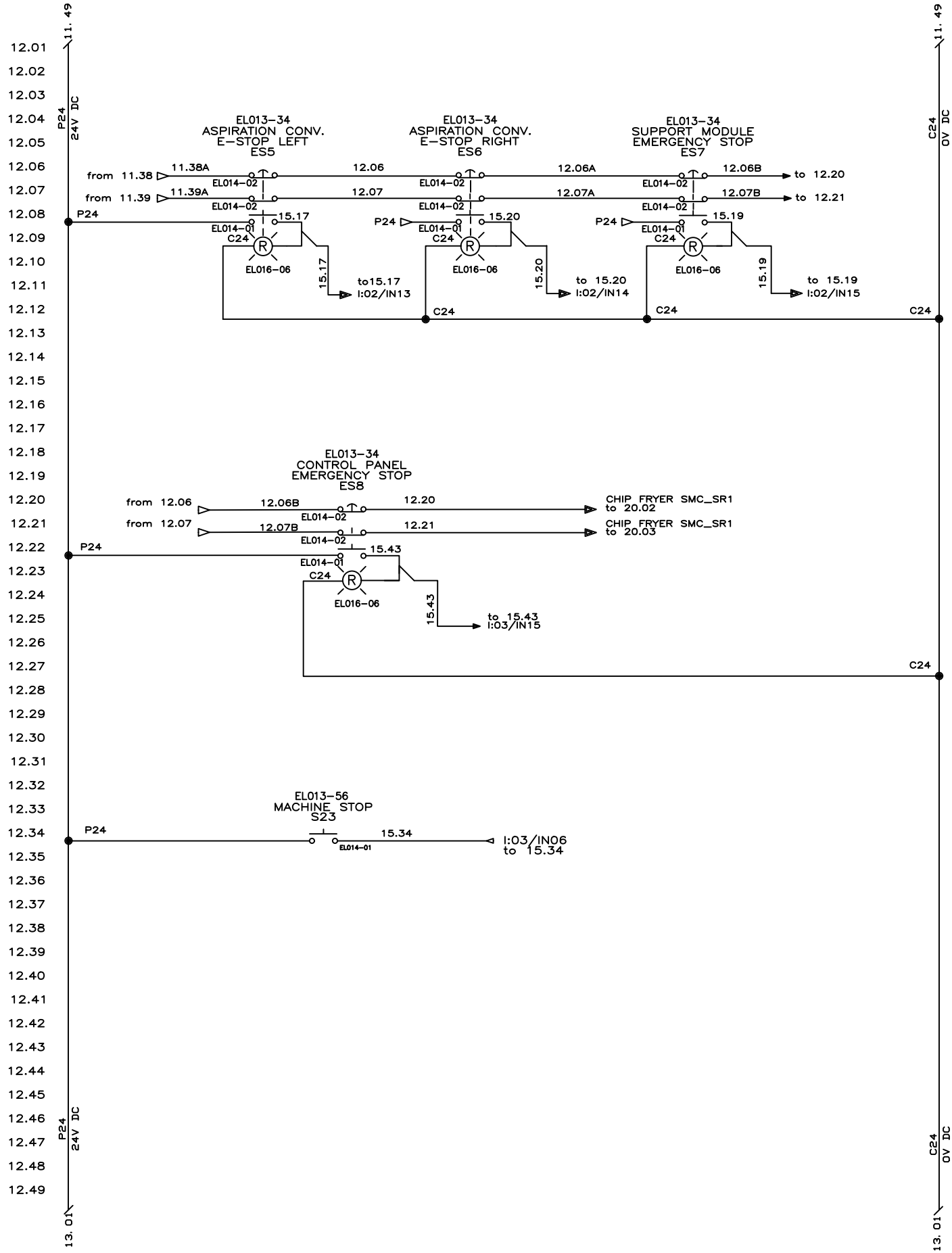

d)				DRAWN BY BP/EP	DATE 6/5/24
c)				CHECKED BY	DATE
b)				APPROVED BY	DATE
a)				ISSUED BY	DATE
NO	DESCRIPTION	BY	DATE		
REVISIONS				APPROVALS	

LAWRENCE EQUIPMENT
2034 NORTH PECK ROAD
SO. EL MONTE, CALIFORNIA 91833
(626) 442-2894 TELEX 704116
TOLL FREE (800) 422-4500

CHIP FRYER A/C DRIVEN, COMPACT LOGIC
OCF6018-03
CONTROL ENCLOSURE

DRAWING NO. OCF187 REV

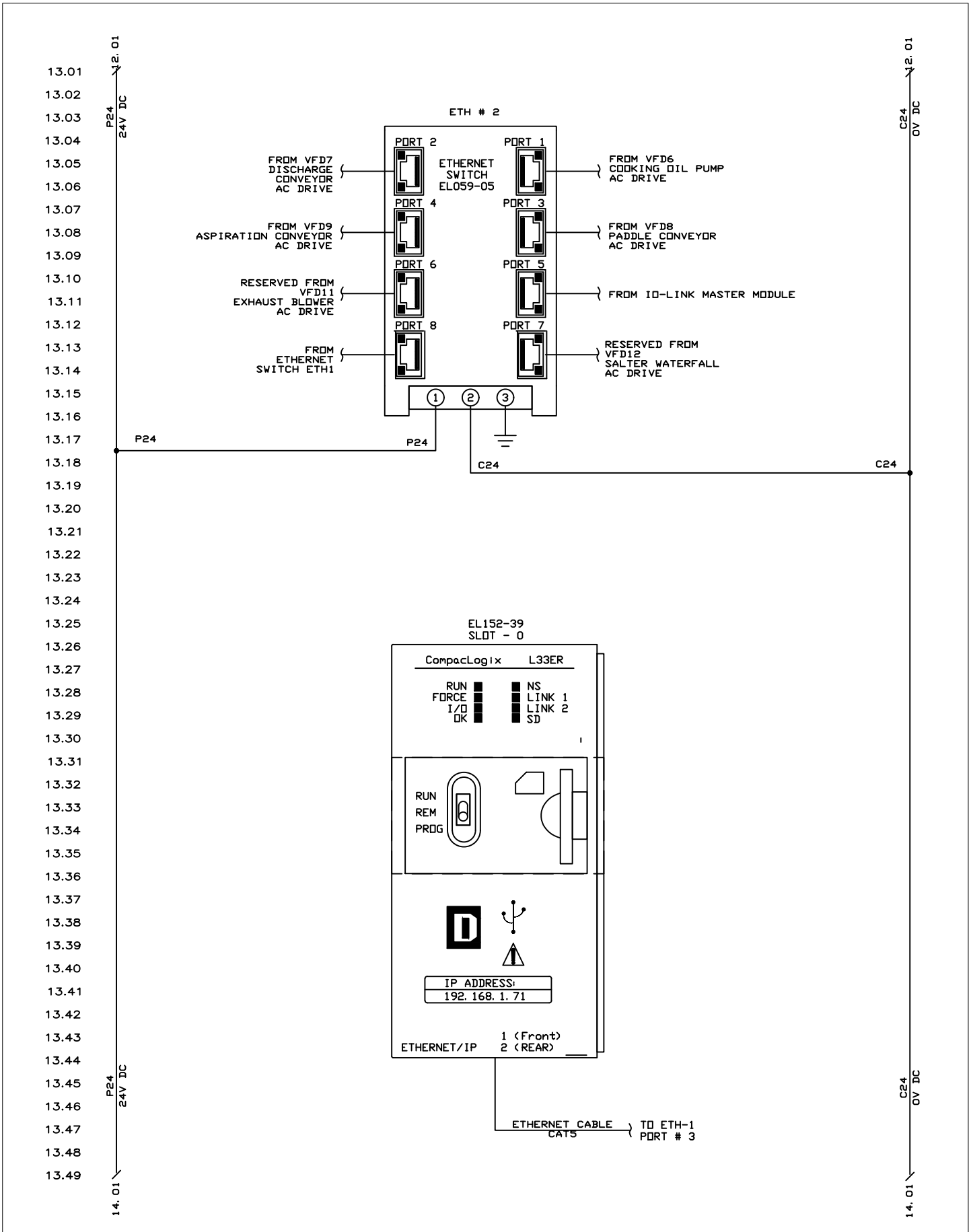

NO	DESCRIPTION	BY	DATE
d)			
c)			
b)			
a)			

REVISIONS

DRAWN BY BP/EP	DATE 6/5/24
CHECKED BY	DATE
APPROVED BY	DATE
ISSUED BY	DATE

APPROVALS

LAWRENCE EQUIPMENT

2034 NORTH PECK ROAD
SO. EL MONTE, CALIFORNIA 91833
(626) 442-2894 TELEX 704116
TOLL FREE (800) 422-4500

CHIP FRYER A/C DRIVEN, COMPACT LOGIC
OCF6018-03
CONTROL ENCLOSURE

DRAWING NO. OCF187 REV

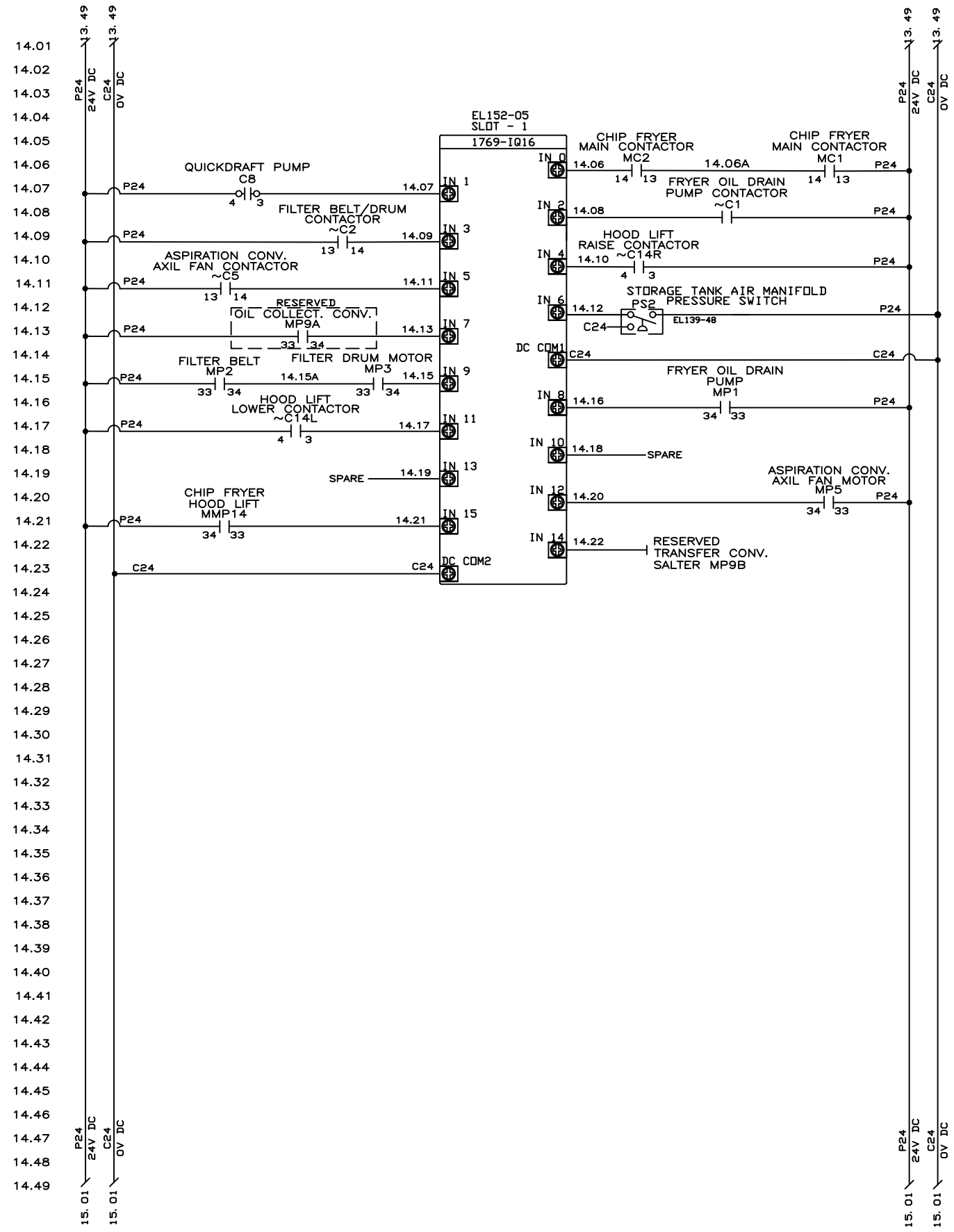

d)				DRAWN BY BP/EP	DATE 6/5/24
c)				CHECKED BY	DATE
b)				APPROVED BY	DATE
a)				ISSUED BY	DATE
NO	DESCRIPTION	BY	DATE		
REVISIONS				APPROVALS	

LAWRENCE EQUIPMENT

2034 NORTH PECK ROAD
SO. EL MONTE, CALIFORNIA 91833
(626) 442-2894 TELEX 704116
TOLL FREE (800) 422-4500

CHIP FRYER A/C DRIVEN, COMPACT LOGIC
OCF6018-03
CONTROL ENCLOSURE

DRAWING NO. OCF187
REV
SHEET 14 OF 22

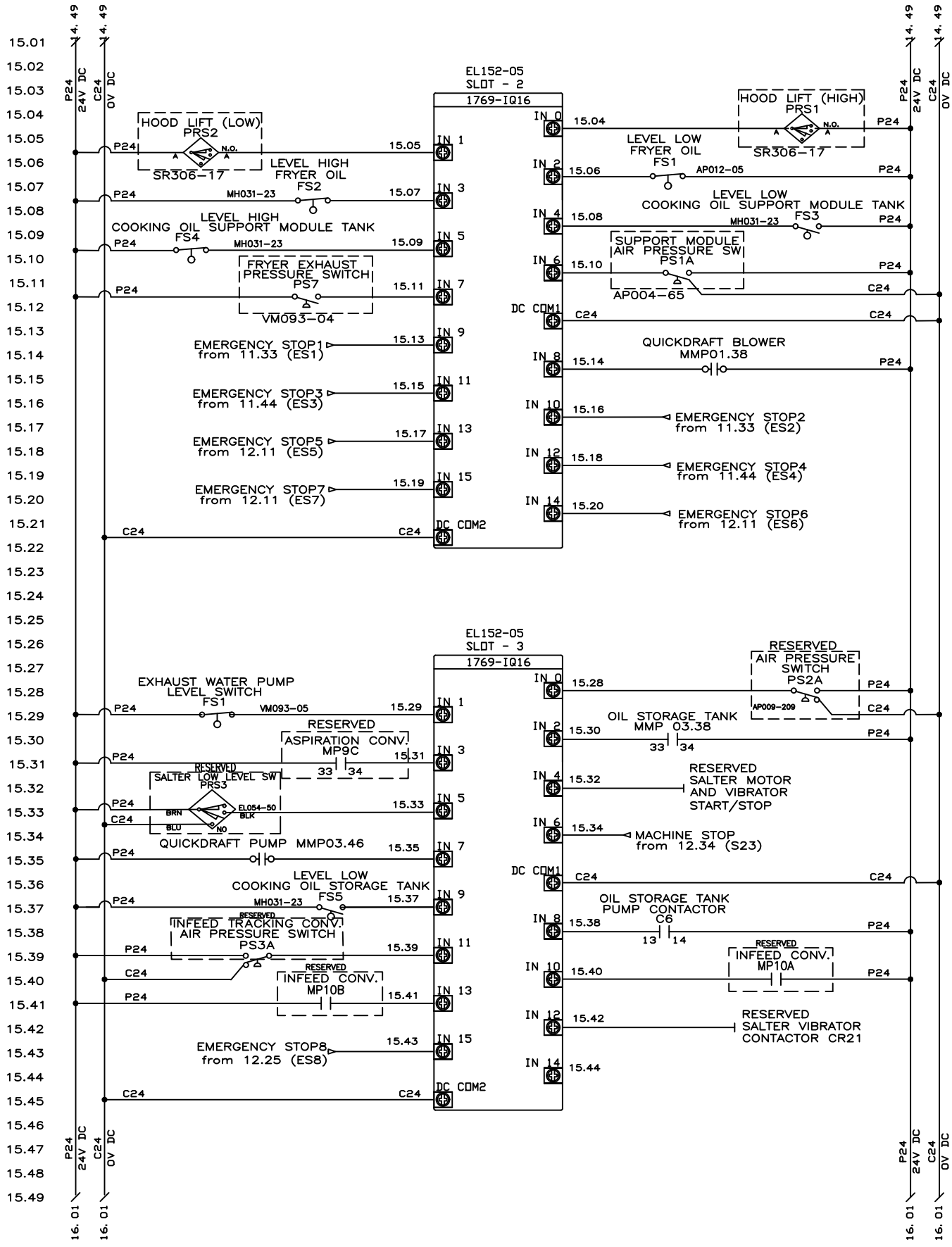

d)				DRAWN BY BP/EP	DATE 6/5/24
c)				CHECKED BY	DATE
b)				APPROVED BY	DATE
a)				ISSUED BY	DATE
NO	DESCRIPTION	BY	DATE		
REVISIONS				APPROVALS	

LAWRENCE EQUIPMENT

2034 NORTH PECK ROAD
SO. EL MONTE, CALIFORNIA 91833
(626) 442-2894 TELEX 704116
TOLL FREE (800) 422-4500

CHIP FRYER A/C DRIVEN, COMPACT LOGIC
OCF6018-03
CONTROL ENCLOSURE

DRAWING NO. OCF187 REV

SHEET 15 OF 22

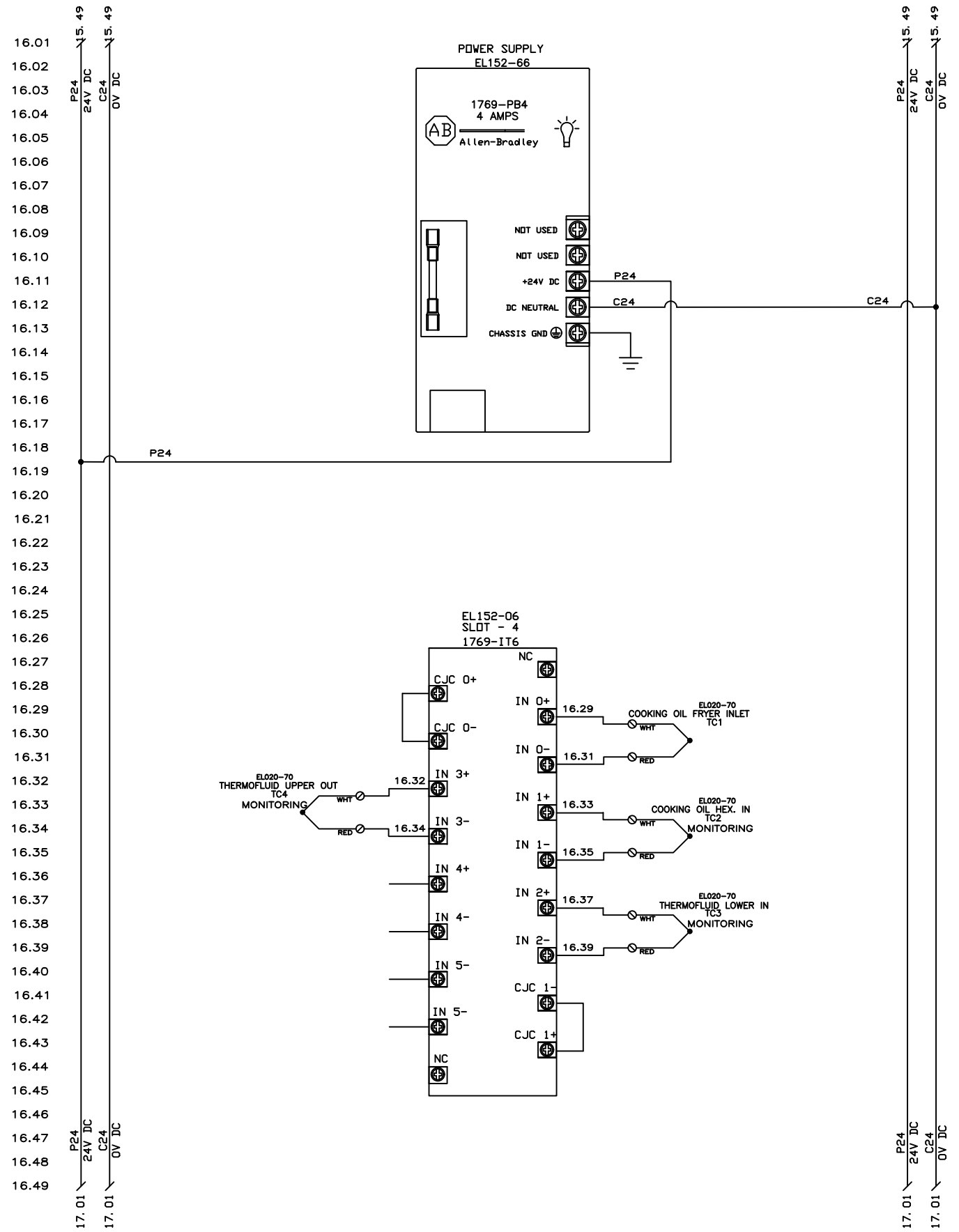

d)				DRAWN BY BP/EP	DATE 6/5/24	LAWRENCE EQUIPMENT
c)				CHECKED BY	DATE	2034 NORTH PECK ROAD SO. EL MONTE, CALIFORNIA 91833 (626) 442-2894 TELEX 704116 TOLL FREE (800) 422-4500
b)				APPROVED BY	DATE	CHIP FRYER A/C DRIVEN, COMPACT LOGIC OCF6018-03 CONTROL ENCLOSURE
a)				ISSUED BY	DATE	DRAWING NO. OCF187 REV
NO	DESCRIPTION	BY	DATE			SHEET 16 OF 22
REVISIONS				APPROVALS		

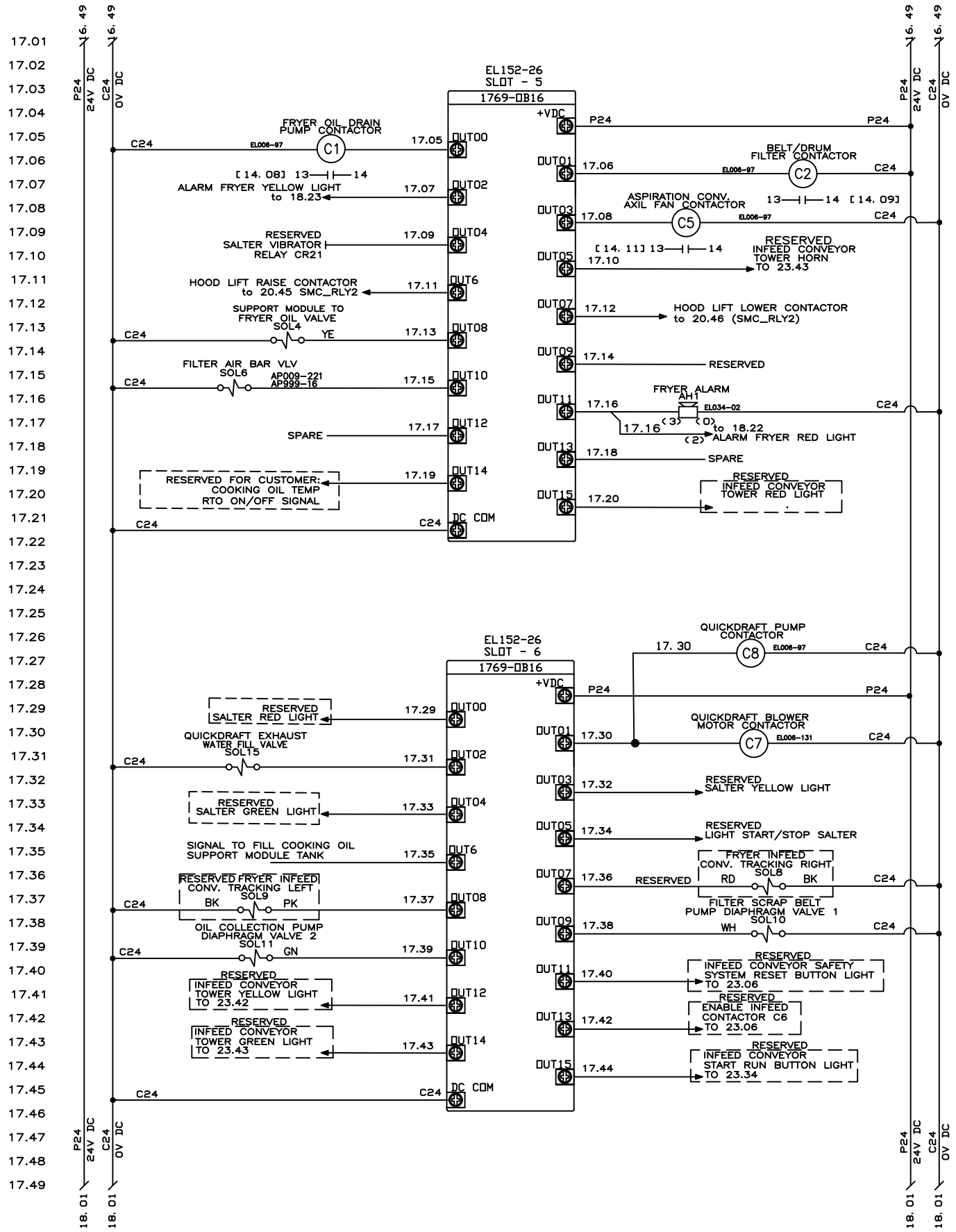

d)			
c)			
b)			
a)			
NO	DESCRIPTION	BY	DATE

REVISIONS

DRAWN BY BP/EP	DATE 6/5/24
CHECKED BY	DATE
APPROVED BY	DATE
ISSUED BY	DATE

APPROVALS

LAWRENCE EQUIPMENT
2034 NORTH PECK ROAD
SO. EL MONTE, CALIFORNIA 91833
(626) 442-2894 TELEX 704116
TOLL FREE (800) 422-4500

CHIP FRYER A/C DRIVEN, COMPACT LOGIC
OCF6018-03
CONTROL ENCLOSURE

DRAWING NO. OCF187 REV

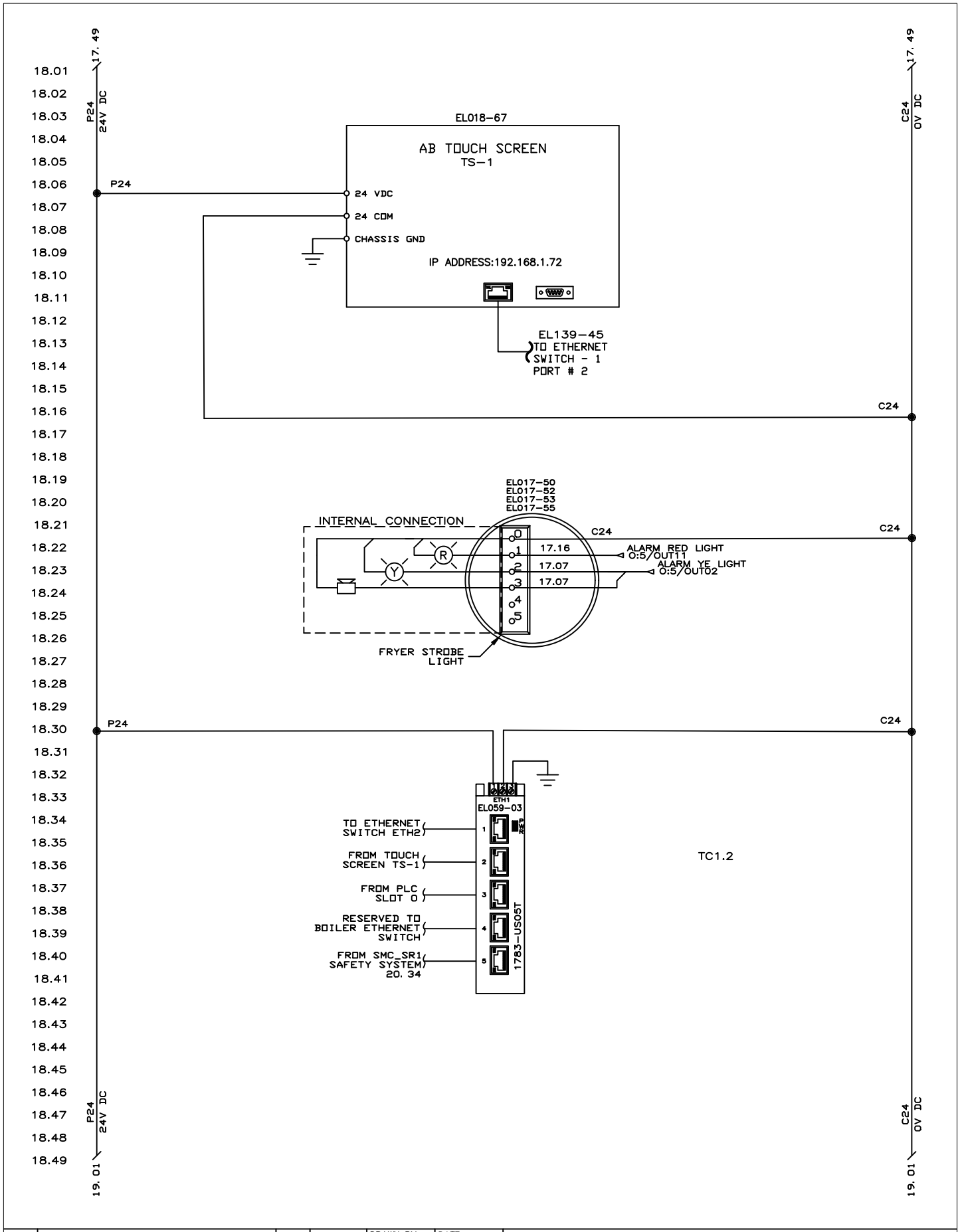

NO	DESCRIPTION	BY	DATE
d)			
c)			
b)			
a)			

REVISIONS

DRAWN BY BP/EP	DATE 6/5/24
CHECKED BY	DATE
APPROVED BY	DATE
ISSUED BY	DATE

APPROVALS

LAWRENCE EQUIPMENT

2034 NORTH PECK ROAD
SO. EL MONTE, CALIFORNIA 91833
(626) 442-2894 TELEX 704116
TOLL FREE (800) 422-4500

CHIP FRYER A/C DRIVEN, COMPACT LOGIC
OCF6018-03
CONTROL ENCLOSURE

DRAWING NO. OCF187
REV
SHEET 18 OF 22

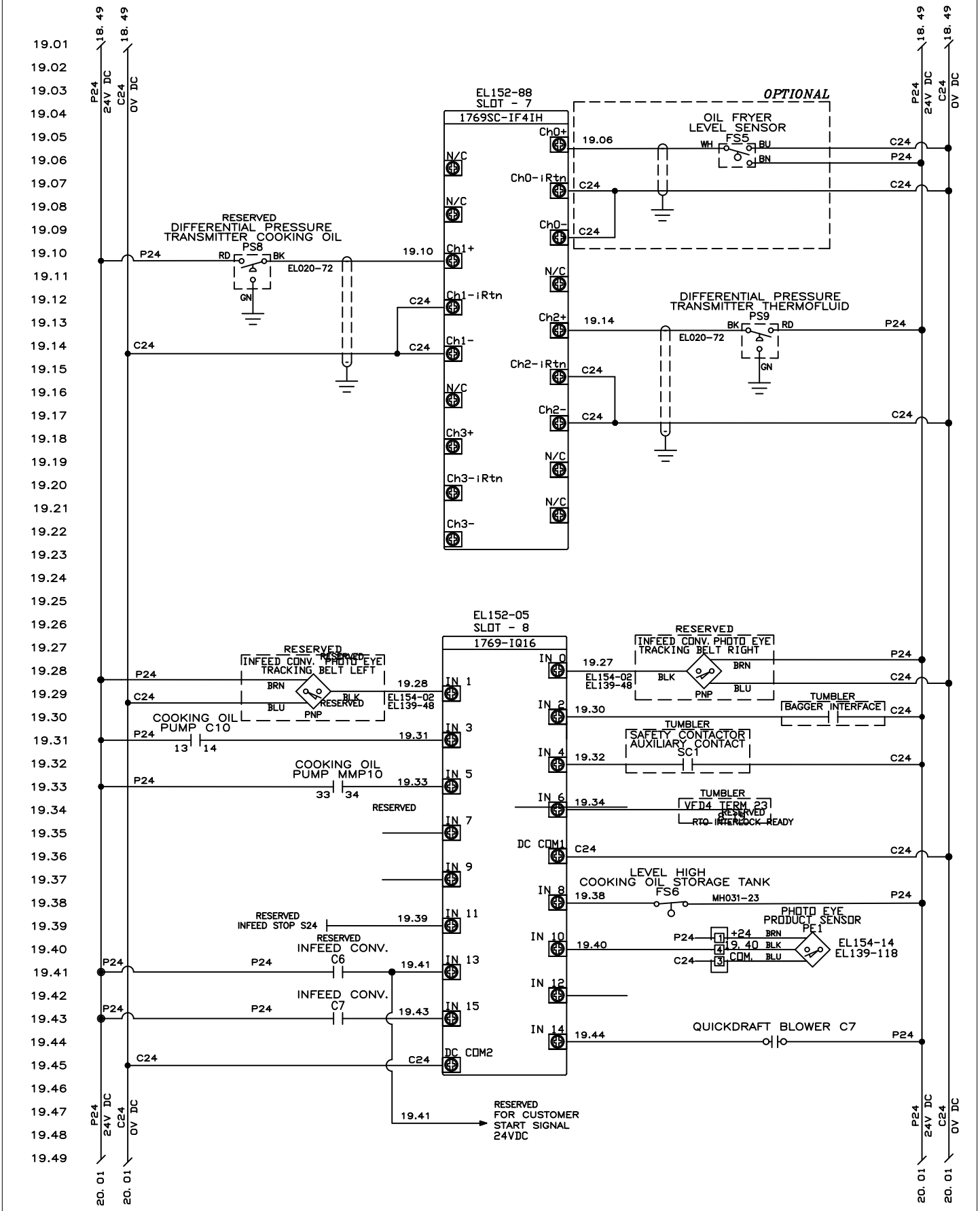

d)				DRAWN BY BP/EP	DATE 6/5/24
c)				CHECKED BY	DATE
b)				APPROVED BY	DATE
a)				ISSUED BY	DATE
NO	DESCRIPTION	BY	DATE		
REVISIONS				APPROVALS	

LAWRENCE EQUIPMENT

2034 NORTH PECK ROAD
SO. EL MONTE, CALIFORNIA 91833
(626) 442-2894 TELEX 704116
TOLL FREE (800) 422-4500

CHIP FRYER A/C DRIVEN, COMPACT LOGIC
OCF6018-03
CONTROL ENCLOSURE

DRAWING NO. OCF187 REV

SHEET 19 OF 22

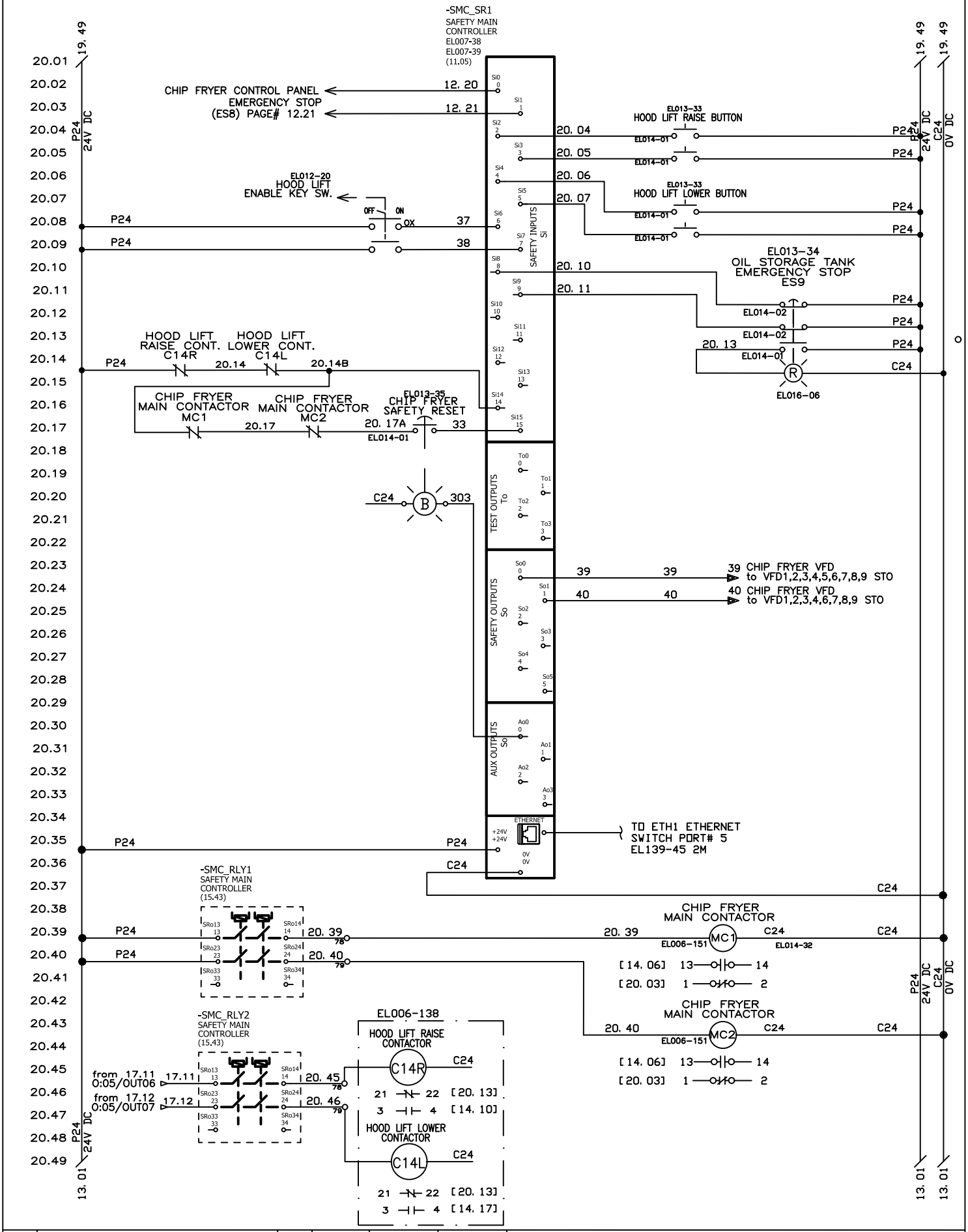

d)				DRAWN BY BP/EP	DATE 6/5/24
c)				CHECKED BY	DATE
b)				APPROVED BY	DATE
a)				ISSUED BY	DATE
NO	DESCRIPTION	BY	DATE		
REVISIONS				APPROVALS	

LAWRENCE EQUIPMENT

2034 NORTH PECK ROAD
SO. EL MONTE, CALIFORNIA 91833
(626) 442-2894 TELEX 704116
TOLL FREE (800) 422-4500

CHIP FRYER A/C DRIVEN, COMPACT LOGIC
OCF6018-03
CONTROL ENCLOSURE

DRAWING NO. OCF187 REV

SHEET 20 OF 22

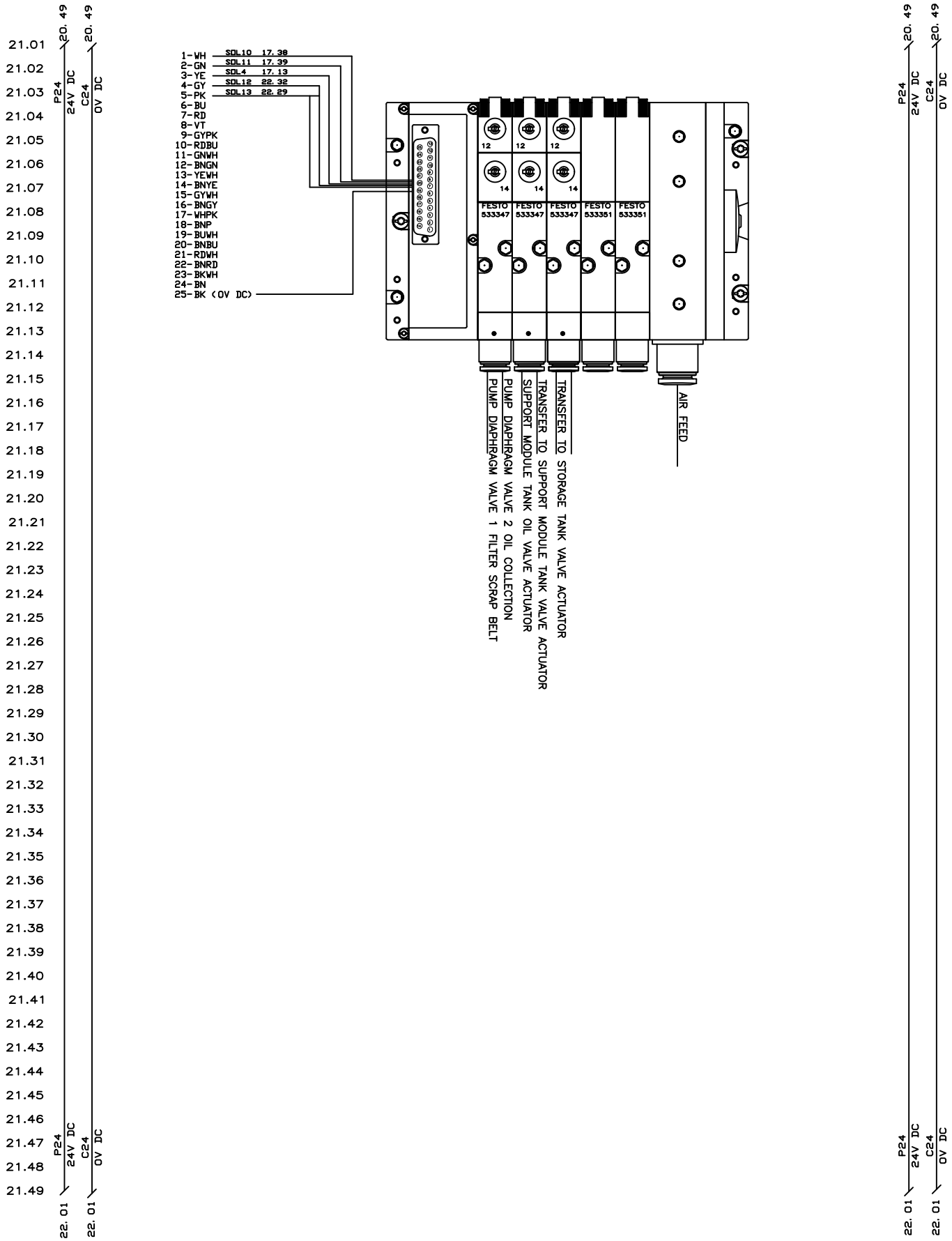

NO	DESCRIPTION	BY	DATE
d)			
c)			
b)			
a)			

REVISIONS C24

DRAWN BY BP/EP	DATE 6/5/24
CHECKED BY	DATE
APPROVED BY	DATE
ISSUED BY	DATE

APPROVALS

LAWRENCE EQUIPMENT

2034 NORTH PECK ROAD
SO. EL MONTE, CALIFORNIA 91833
(626) 442-2894 TELEX 704116
TOLL FREE (800) 422-4500

CHIP FRYER A/C DRIVEN, COMPACT LOGIC
OCF6018-03
CONTROL ENCLOSURE

DRAWING NO. OCF187 REV

SHEET 21 OF 22

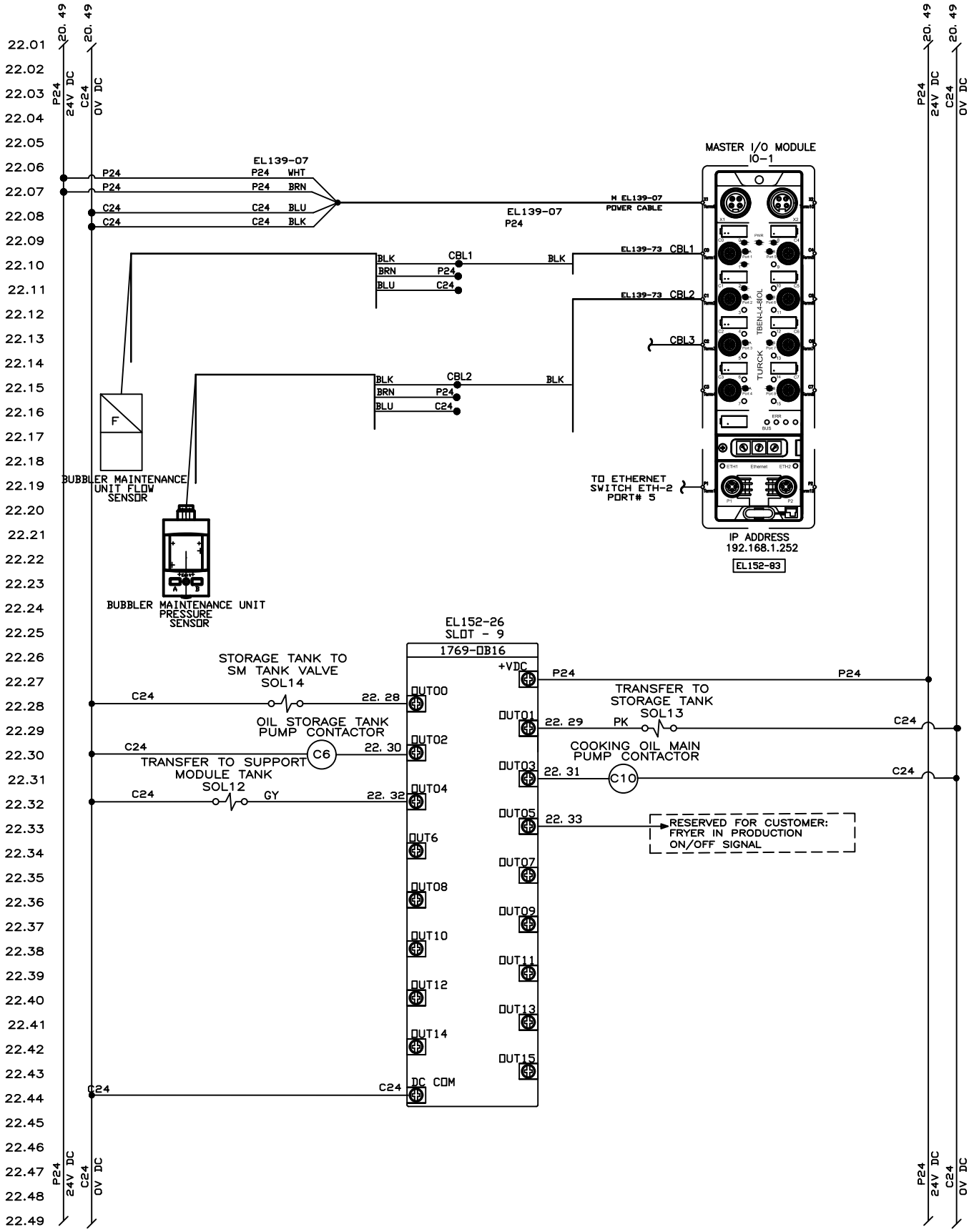

NO	DESCRIPTION	BY	DATE
d)			
c)			
b)			
a)			

REVISIONS

DRAWN BY BP/EP	DATE 6/5/24
CHECKED BY	DATE
APPROVED BY	DATE
ISSUED BY	DATE

APPROVALS

LAWRENCE EQUIPMENT

2034 NORTH PECK ROAD
SO. EL MONTE, CALIFORNIA 91833
(626) 442-2894 TELEX 704116
TOLL FREE (800) 422-4500

CHIP FRYER A/C DRIVEN, COMPACT LOGIC
OCF6018-03
CONTROL ENCLOSURE

DRAWING NO. OCF187 REV

LEGEND

- Fan or Pump
- Hand Operated Valve
- Motor
- Pump/Motor
- Pressure guage
- Thermocouple
- Thermometer
- Drain
- Pressure Transducer
- Differential Pressure Transmitter
- Pressure Switch Low
- Pressure Switch High
- Level Switch Low
- Level Switch High
- Filter
- Safety Valve
- Check Valve
- Safety Thermostat
- Solenoid Switch Valve
- Motor Operated Valve
- Air Operated Valve
- Pressure Regulator
- Orifice
- Electric Signal and/or Cable

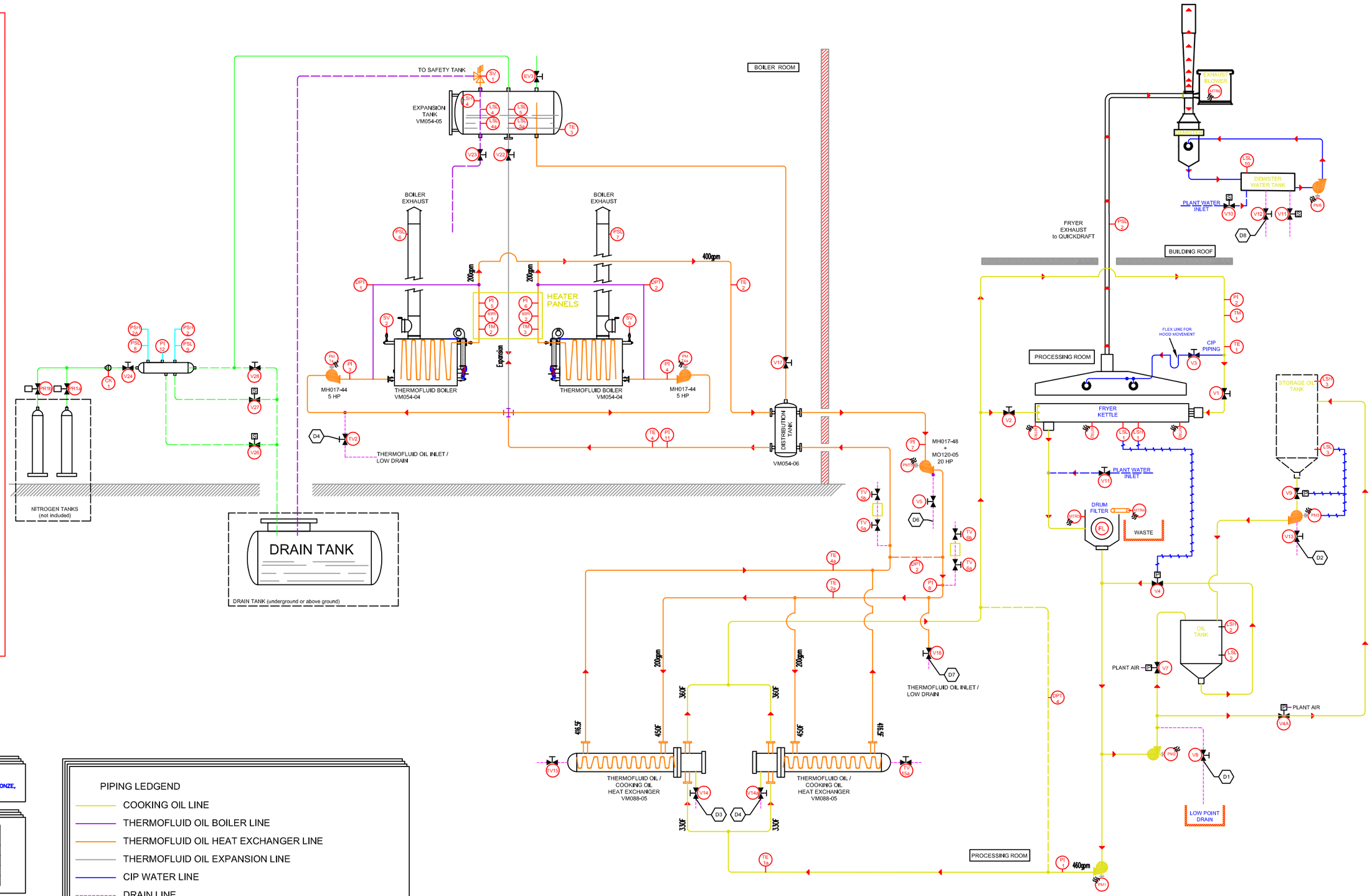

LAWRENCE EQUIPMENT SHOP NOTES :

L1. ALL PIPE FITTINGS IN CONTACT WITH COOKING MUST BE EITHER ALL IRON OR STAINLESS STEEL. NO BRASS, BRONZE, CADMIUM OR ZINC.

OPERATING COOKING OIL VOLUME	US GALLONS	LITRES
KETTLE @ 4" OIL DEPTH	210	795
HEAT EXCHANGER	25	95
DRUM FILTER TANK	140	530
OIL PIPING	70	265
TOTAL	445	1685

CUSTOMER NOTES :

C1. MATERIALS: NO COPPER, BRONZE CADMIUM OR ZINC ALLOWED IN CONTACT WITH OIL.

C2. VALVES UNLESS SPECIFIED ARE 150 LBS STAINLESS STEEL THREADED BALL VALVES.

C3. ZERO ELEVATION HORIZONTAL REFERNECE LINE. PROPER LEVELING MUST BE PROVIDED AT INSTALLING TO ACCOUNT FOR SLOPING FLOORS.

C4. CUSTOMER MUST SUPPLY 1.25 PLANT WATER LINE FOR CIP VALVE MUST BE LOCKABLE FOR SAFTEY.

PIPING LEDGEND

- COOKING OIL LINE
- THERMOFLUID OIL BOILER LINE
- THERMOFLUID OIL HEAT EXCHANGER LINE
- THERMOFLUID OIL EXPANSION LINE
- CIP WATER LINE
- DRAIN LINE
- NITROGEN LINE

ESTIMATE TOTAL THERMOFLUID OIL CAPACITY - 900gal (3400lt)

- PIPING 6"x270ft = 400gal (1515lt)
- HEATERS = 60gal (225lt)
- HEAT EXCHANGERS = 55gal (200lt)

NO	REVISION	BY	DATE	BY	DATE
4)					
3)					
2)					
1)					

DUE TO DESIGN UPDATES AND OR INSTALLATION CONDITIONS, TOLERANCES EXCEPT AS NOTED ARE: 12'-20" = ± 1.00 INCHES 20'-50' = ± 2.00 INCHES 50' -100' = ± 4.00 INCHES OVER 100' = ± 8.00 INCHES

ALL MACHINE DESIGNS SUBJECT TO CHANGE WITHOUT NOTICE.

SCALE ONLY APPLIES TO "D" SIZE SHEETS.

LAWRENCE EQUIPMENT
2034 NORTH PECK ROAD
SO. EL MONTE, CALIFORNIA 91733
(626) 442-2894 TELEX 704116
(626) 350-5181 FAX
TOLL FREE (800) 423-4500

OCF6018-03 FIESTA'S FRYER THERMOFLUID NITROGEN SYS

DRAWN BY	DATE	SCALE: NO SCALE
NICOLA	07-23-24	
CHECKED BY	DATE	DRAWING NO. OCF6018-03 P&ID
APPROVED BY	DATE	REV E / SHEET 1

0CF6018-03 VALVE CHART

TAG	DESCRIPTION	TYPE	MACHINE OPERATION STATUS				
			COOKING OIL FILLING	PRODUCTION	COOKING OIL STORAGE	CIP	DRAINING
V1	COOKING OIL BACK PRESSURE MAIN VALVE	MANUAL	OPEN	OPEN	OPEN	OPEN	OPEN
V2	KETTLE OIL JET	MANUAL	OPEN	OPEN	OPEN	OPEN	OPEN
V3	CIP HOOD SPRAY NOZZLES	MANUAL	CLOSE	CLOSE	CLOSE	OPEN	CLOSE
V4	COOKING STORAGE OIL SUPPLY	PNEUMATIC	OPEN	AUTO	CLOSE	CLOSE	OPEN
V5	COOKING FRESH OIL FILTER SUPPLY (NOT SUPPLIED BY LE)	PNEUMATIC	CLOSE	AUTO	CLOSE	CLOSE	CLOSE
V6	COOKING FRESH OIL TANK SUPPLY (NOT SUPPLIED BY LE)	PNEUMATIC	AUTO	AUTO	CLOSE	CLOSE	CLOSE
V7	COOKING OIL STORAGE	MANUAL	OPEN	OPEN	OPEN	CLOSE	OPEN
V8	COOKING OIL MAIN DRAIN	MANUAL	CLOSE	CLOSE	CLOSE	CLOSE	OPEN
V9	COOKING STORAGE TANK OIL SUPPLY	MANUAL	OPEN	OPEN	OPEN	OPEN	OPEN
V10	QUICK DRAFT DEMISTER WATER INLET	SOLENOID	OPEN	OPEN	OPEN	OPEN	CLOSE
V11	QUICK DRAFT DEMISTER WATER DISCHARGE	SOLENOID	CLOSE	CLOSE	CLOSE	OPEN	OPEN
V12	QUICK DRAFT DEMISTER WATER MANUAL DISCHARGE (NOT SUPPLIED BY LE)	MANUAL	OPEN	OPEN	OPEN	OPEN	OPEN
V13	COOKING STORAGE OIL TANK DRAIN	MANUAL	OPEN	OPEN	OPEN	CLOSE	OPEN
V14 / V14a	COOKING OIL HEAT EXCHANGER DRAIN	MANUAL	CLOSE	CLOSE	CLOSE	CLOSE	OPEN
V15	COOCKING OIL PIPE DRAIN	MANUAL	CLOSE	CLOSE	CLOSE	CLOSE	OPEN
TV1	THERMOFLUID OIL FILLING PORT / LOW DRAIN	MANUAL	LOCK CLOSE	LOCK CLOSE	LOCK CLOSE	LOCK CLOSE	LOCK CLOSE
TV2	THERMOFLUID OIL FILLING PORT / LOW DRAIN	MANUAL	LOCK CLOSE	LOCK CLOSE	LOCK CLOSE	LOCK CLOSE	LOCK CLOSE
EV3	THERMOFLUID OIL TANK VENT	MANUAL	LOCK CLOSE	LOCK CLOSE	LOCK CLOSE	LOCK CLOSE	LOCK CLOSE
TV5a	THERMOFLUID OIL LINE VENT	MANUAL	OPEN	OPEN	OPEN	OPEN	OPEN
TV5b	THERMOFLUID OIL LINE VENT	MANUAL	CLOSE	CLOSE	CLOSE	CLOSE	CLOSE
TV6a	THERMOFLUID OIL LINE VENT	MANUAL	OPEN	OPEN	OPEN	OPEN	OPEN
TV6b	THERMOFLUID OIL LINE VENT	MANUAL	CLOSE	CLOSE	CLOSE	CLOSE	CLOSE
V17	DEAREATOR TANK TOP VALVE	MANUAL	LOCK CLOSE	LOCK CLOSE	LOCK CLOSE	LOCK CLOSE	LOCK CLOSE
V22	THERMOFLUID OIL EXPANSION TANK MAIN VALVE	MANUAL	LOCK OPEN	LOCK OPEN	LOCK OPEN	LOCK OPEN	LOCK OPEN
V23	THERMOFLUID OIL EXPANSION TANK DRAIN	MANUAL	CLOSE	CLOSE	CLOSE	CLOSE	CLOSE
PR1a - PR1b	NITROGEN INLET	MANUAL	OPEN	OPEN	OPEN	OPEN	OPEN
V24	NITROGEN INLET	MANUAL	OPEN	OPEN	OPEN	OPEN	OPEN
V26	NITROGEN DISCARGE	SOLENOID	AUTO	AUTO	AUTO	AUTO	AUTO
V27	NITROGEN DISCARGE	SOLENOID	AUTO	AUTO	AUTO	AUTO	AUTO
V28	NITROGEN PRESSURE RELIEF	MANUAL	CLOSE	CLOSE	CLOSE	CLOSE	CLOSE

	COOKING OIL
	WATER
	THERMOFLUID OIL
	NITROGEN

0CF6018-03 PROCESSING COMPONENTS

TAG	DESCRIPTION	NOTES
PUMPS		
PM1	SF012-30+MO120-01 / COOKING OIL MAIN PUMP	20HP - 1750RPM
PMT5	MH017-48+MO120-05 / THEMOFLUID MAIN PUMP	20HP - 3600RPM
PMT4	MH017-44 / HEATER_1 RECIRCULATION PUMP	5HP - 1750RPM
PMT4a	MH017-44 / HEATER_2 RECIRCULATION PUMP	5HP - 1750RPM
PM2	MH017-42 / COOKING OIL DRAIN PUMP	1HP - 3600RPM
PM3	MH017-42 / OIL STORAGE TANK PUMP	1HP - 3600RPM
PM5	QUICKDRAFT DEMISTER WATER RECIRCULATION PUMP	2HP - 3450RPM
SAFETY VALVES		
SV1	VA013-03 / EXPANSION TANK SAFETY VALVE	SET AT 60 PSI
SV2	PARKER BOILER HEATER_1 SAFETY VALVE	SET AT 125PSI
SV3	PARKER BOILER HEATER_2 SAFETY VALVE	SET AT 125PSI
PRESSURE SWITCHES		
PSL1	QUICKDRAFT EXHAUST BLOWER	
PSH2	AP008-30 / NITROGEN HIGH PRESSURE_1	55PSI - FESTO MANIFOLD AP008-30
PSH2a	AP008-30 / NITROGEN HIGH PRESSURE_2	55PSI - FESTO MANIFOLD AP008-30
PSL6	PARKER HEATER_1 EXHAUST	
PSL7	PARKER HEATER_2 EXHAUST	
PSL8	AP008-30 / NITROGEN LOW PRESSURE	15PSI - FESTO MANIFOLD AP008-30
PSL9	AP008-30 / NITROGEN LOW PRESSURE LIMIT	12PSI - FESTO MANIFOLD AP008-30
THERMOCOUPLES		
TE1	EL020-70 - COOKING OIL KETTLE INLET	MAX COOKING OIL TEMPERATURE
TE2	EL020-57 - THERMOFLUID HEATERS TEMPERATURE OUTLET	MAX THERMOFLUID OIL TEMPERATURE
TE3	EL020-57 - EXPANSION TANK TEMPERATURE	120F LIMIT TEMPERATURE THERMOFLUID OIL IN EXPANSION TANK
TE4	EL020-57 - THERMOFLIOD OIL RETURN TEMPERATURE	LOWER THERMOFLUID OIL TEMPERATURE
TE1a	EL020-57 - COOKING OIL HEAT EXCHANGER INLET	
TE2a	EL020-57 - THERMOFLUID HEAT EXCHANGER INLET	
TE4a	EL020-57 - THERMOFLUID HEAT EXCHANGER OUTLET	
LEVEL SWITCHES		
LSL1-LSH1	FRYER KETTLE LEVEL - BUBBLER SYSTEM	ASSEMBLY #580140
LSL2	SUPPORT MODULE TANK LOW LEVEL	MH031-23
LSH2	SUPPORT MODULE TANK HIGH LEVEL	MH031-23
LSL3	STORAGE TANK LOW LEVEL	MH031-23
LSH3	STORAGE TANK HIGH LEVEL	MH031-23
LSL4	THERMOFLUID EXPANSION TANK LOW LEVEL HEATER_1	PARKER BOILER
LSL4a	THERMOFLUID EXPANSION TANK LOW LEVEL HEATER_1	PARKER BOILER
LSL5	THERMOFLUID EXPANSION TANK LOW LEVEL HEATER_2	PARKER BOILER
LSL5a	THERMOFLUID EXPANSION TANK LOW LEVEL HEATER_2	PARKER BOILER
LSH4	THERMOFLUID EXPANSION TANK HIGH LEVEL	MH031-23
LSL10	QUICKDRAFT DEMISTER WATER LOW LEVEL	QUICKDRAFT
DIFFERENTIAL PRESSURE SWITCHES		

DPT1	THERMOFLUID OIL HEATER_1 IN-OUT	PARKER BOILER
DPT2	THERMOFLUID OIL HEATER_2 IN-OUT	PARKER BOILER
DPT3	THERMOFLUID OIL HEAT EXCHANGER IN-OUT	EL020-72
DPT4	COOKING OIL HEAT EXCHANGER IN-OUT	EL020-72
PNEUMATIC VALVES		
V4	COOKING OIL SUPPORT MODULE TANK	VA002-71 - NC, SPRING RETURN, HIGH CYCLE
V4a	COOKING OIL SUPPORT MODULE TO STORAGE TANK	VA002-71 - NC, SPRING RETURN, HIGH CYCLE
V9	COOKING OIL STORAGE TANK	VA002-71 - NC, SPRING RETURN, HIGH CYCLE
SOLENOID VALVES		
V26	NITROGEN HIGH PRESSURE RELEASE	FESTO MANIFOLD AP008-30 / SET AT 55PSI
V27	NITROGEN HIGH PRESSURE RELEASE	FESTO MANIFOLD AP008-30 / SET AT 55PSI
V10	QUICKDRAFT DEMISTER FRESH WATER INLET	QUICKDRAFT
V11	QUICKDRAFT DEMISTER WATER DRAIN	QUICKDRAFT
MANUAL PURGE VALVES		
TV15	HEAT EXCHANGER_1 TOP PURGE VALVE	
TV15a	HEAT EXCHANGER_2 TOP PURGE VALVE	
TV5b	THERMOFLUID RETURN PIPE PURGE VALVE	HIGHEST POINT OF CIRCUIT
TV6b	THERMOFLUID MAIN PIPE PURGE VALVE	HIGHEST POINT OF CIRCUIT
EV3	EXPANSION TANK PURGE VALVE	
PROCESSING MANUAL VALVES		
V1	COOKING OIL BACK PRESSURE REGULATION VALVE	BACK PRESSURE MUST BE 5PSI MINIMUM WITH OIL AT TEMPERATURE
V2	COOKING OIL FRONT NOZZLES FLOW REGULATION VALVE	
V3	KETTLE CIP SPRAY BALL VALVES	OPEN ONLY DURING CIP
V7	SUPPORT MODULE TANK COOKING OIL RETURN	
V11	FRESH WATER INLET	FOR CIP - NOT SUPPLIED BY LE
V17	THERMOFLUID DISTRIBUTION TANK TO EXPANSION TANK LINE	OPEN ONLY DURING FILLING - **MUST BE LOCKED CLOSE AFTER THERMAL OIL FILLING**
V22	THEMOFLUID OIL EXPANSION LINE (TO EXPANSION TANK)	CLOSE ONLY DURING FILLING - **MUST BE LOCKED OPEN AFTER THERMAL OIL FILLING**
V24	NITROGEN SUPPLY LINE	ON FESTO MANIFOLD
DRAINING MANUAL VALVES		
V18	THERMOFLUID MAIN DRAIN / FILLING PORT	
TV2	THERMOFLUID MAIN DRAIN / FILLING PORT	
V5	THERMOFLUID MAIN DRAIN / FILLING PORT	
V28	NITROGEN PRESSURE DRAINING VALVE	
V8	COOKING OIL SUPPORT MODULE TANK DRAINING VALVE	
V14-V14a	COOKING OIL HEAT EXCANGER DRAINING VALVE	
V23	THERMOFLUID OIL EXPANSION TANK DRAINING VALVE	
V12	QUICKDRAFT DEMINSTER WATER DRAIN VALVE	
V13	COOKING OIL STORAGE TANK DRAINING VALVE	
MOTORS		
MTR1	KETTLE DISCHARGE CONVEYOR	
MTR2	KETTLE MAIN CONVEYOR	
MTR3	FILTER DRUM	
MTR4	DRUM CONVEYOR	
MTR5	PADDLE CONVEYOR	
MTR6	QUICK DRAFT EXHAUST BLOWER	

MATERIALS LIST

ITEM	LE PART NUMBER	DESCRIPTION	QTY
1	EH999-18	BASE FLANGE FOR 3 CONTACTS	4
2	EH013-77	MULTI TERMINAL LUG FRAME-G	1
3	EL006-166	MANUAL MTR STARTER 1.60-2.50	1
4	EL006-97	CONTACTOR 9AMP 24VDC COIL 460V	3
5	EL006-138	CONTACTOR REV 9AMP 24V DC	1
6	EL006-151	CONTACTOR 23 AMP 24 VDC COIL	2
7	EL006-163	MANUAL MTR STARTER 0.4-0.63A	1
8	EL006-165	MANUAL MTR STARTER 1.00-1.60	2
9	EL006-167	MANUAL MTR STARTER 2.50-4.00	1
10	EL007-38	SAFTEY MAIN CONTROLLER STD	1
11	EL007-39	SAFETY RELAY OUTPUT UNIT	2
12	EL012-20	KEY SWITCH 2POS SPRING RETRUN	1
13	EL013-33	PUSH BUTTON FLUSH BLUE 22.5MM	2
14	EL013-34	PUSH BUTTON ILLUM MUSHROOM RED	5
15	EL013-35	PUSH BTTN FLSH BLUE ILLUM 22MM	1
16	EL013-56	PUSH BTTN MUSHRM BLACK 22.5MM	1
17	EL014-01	CONTACT BLOCK N.O.	17
18	EL014-02	CONTACT BLOCK N.C.	10
19	EL014-32	CONTACT BLOCKS AUX 1NO 1NC	2
20	EL014-67	CONTACT BLOCKS AUX 1NO 1NC	1
21	EL016-06	LIGHT TERM W/BULB LATCH	6
22	EL139-118	CABLE PATCHCORD 2.2M 4PIN DC	1
23	EL152-05	16 POINT 24VDC SINK/SOURCE MDL	5
24	EL152-06	6 CHNNL THRMCPL/MILLIVLT INP	1
25	EL152-26	COMPACT OUTPUT PNP 16PIN CARD	3
26	EL152-34	PLC COMPACT I/O END CAP/TERMIN	1
27	EL017-50	LED TWR 0.5NPT MNT BASE	1
28	EL017-52	LED TWR LIGHT FLASH YLL 24VDC	1
29	EL017-53	LED TWR LIGHT FLASH RED 24VDC	1
30	EL017-55	TOWER SOUND 24VDC	1
31	EL018-56	7.0IN COLOR TCH SCRN ETHERNET	1
32	EL024-92	TRANS 1.5KVA 400-460V/115 230V	1
33	EL027-12	COOLING A/C 230V AC 2K BTUH 4X	1
34	FP003-05	RITTAL FINE FILTER MAT	1
35	EL031-68	CIR.BREAKER 6AMP 2POLE AC D	1
36	EL031-76	CIR. BREAKER 1AMP 1POLE AC C	1
37	EL031-78	CIR.BREAKER 3AMP 1POLE AC C	1
38	EL031-85	CIRCUIT BREAKER 50 AMP 480V	1
39	EL031-86	CIRCUIT BREAKER 90 AMP 480V	1
40	EL031-96	CIR.BREAKER 6AMP 3POLE AC C	1
41	EL031-107	CIR.BREAKER 10AMP 2POLE AC C	1
42	EL031-111	CIR.BREAKER 3AMP 3POLE AC C	3
43	EL031-123	CIR.BREAKER 20AMP 3POLE AC C	1
44	EL032-47	DOOR DISC OPERATING SHAFT	1
45	EL032-49	DOOR ROTARY OPERATOR KIT 140G	1
46	EL032-50	DOOR DISC SWTCH ROTARY W/GUIDE	1
47	EL034-02	HRN VIBRATONE WTHR PRF 24VDC	1
48	EL040-66	RECEPTICAL DIN RAIL MOUNT 120V	1
49	EL047-14	TERMINAL BLOCK 6MM GREY	300
50	EL152-39	COMPACTLOGIC PROCESSOR 2MB	1
51	EL152-62	FLASH MEMORY CARD TOUCH SCRN.	1
52	EL152-66	POWER SUPPLY 24V DC 4 AMPS	2
53	EL152-88	ANALOG HART INPUT CLX 1769	1
54	EL047-15	GROUND BLOCK 6MM YELLOW/GREEN	30
55	EL047-16	END PLATE	20
56	EL047-17	END STOP	30
57	EL047-46	TERMINAL BLK. POWER DISTR.	2

MATERIALS LIST

ITEM	LE PART NUMBER	DESCRIPTION	QTY
58	EL047-101	TERMINAL BLOCK COVER	2
59	EL047-131	TERMINAL BLOCK 6MM2 4 WIRES	36
60	EL047-137	4 WIRES PUSH IN TB END BARRIER	4
61	EL059-03	ETHERNET SWTCH UNMANGED 5PORT	1
62	EL059-05	ETHERNET SWITCH UNMANAGED 8PRT	1
63	EL061-26	POWER SUPPLY 380-480AC TO 24VD	1
64	EL061-27	SURGE SUPPRESSOR 550V 3PHASE	1
65	EL073-18	MANUAL MTR JUMPER FOR 1	1
66	EL073-22	MOTOR OL BUSBAR FEED LUGS	1
67	EL073-13	CIR BRKR UL489 BUSBAR 12PINS	1
68	EL073-15	CIR BRKR UL489 POWER FEED LUG	3
69	EL106-02	RELAY TYPE HC 4PL 4ND/NC 24VDC	1
70	EL107-01	RELAY SOCKET HC 4PL 10A 250V	1
71	EL109-18	ADJ FREQ DRV AB 1/2HP 528V 3PH	3
72	EL109-26	ADJ FREQ DRV AB 20HP 528V 3	1
73	EL139-43	CABLE ETHERNET RJ45 MALE-MALE	1
74	EL139-45	CABLE ETHERNET RJ45 MALE-MALE	2
75	EL139-48	CABLE FEMALE STRGHT 3PIN THRED	1
76	EL139-50	CABLE ETHERNET RJ45 MALE-MALE	1
77	EL154-29	LASER SENSOR IO-LINK 490MM M18	1
78	MH011-36	DOOR DATA POCKET SMALL 6 x 6	1
79	NP002-71	EMERGENCY STOP	5

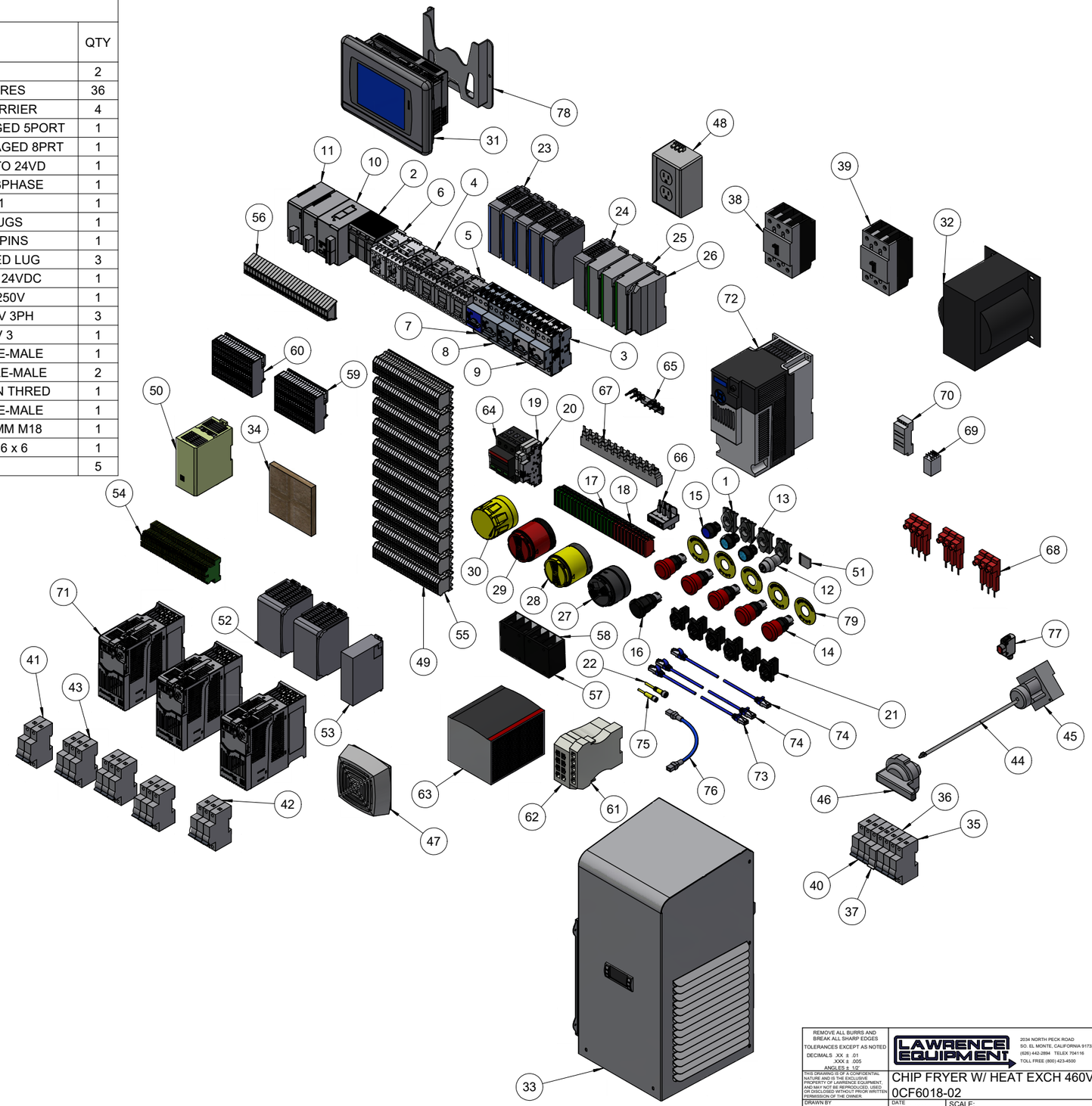

REMOVE ALL BURRS AND BREAK ALL SHARP EDGES
TOLERANCES EXCEPT AS NOTED
DECIMALS .XX ± .01
.XXX ± .005
ANGLES ± 1/2°

THIS DRAWING IS OF A CONFIDENTIAL NATURE AND IS THE EXCLUSIVE PROPERTY OF LAWRENCE EQUIPMENT, AND MAY NOT BE REPRODUCED, USED, OR DISCLOSED WITHOUT PRIOR WRITTEN PERMISSION OF THE OWNER.

LAWRENCE EQUIPMENT
2034 NORTH PECK ROAD
SO. EL MONTE, CALIFORNIA 91733
(626) 442-2894 TELEX 704116
TOLL FREE (800) 423-4500

CHIP FRYER W/ HEAT EXCH 460V 60
0CF6018-02

DRAWN BY	Oscar Marroquin
DATE	7/29/2024
SCALE:	
CHECKED BY	
DATE	
DRAWING NO.	501569
REV	A
SHEET	1 of 1
APPROVED BY	
DATE	

NO	REVISION	BY	DATE	BY	DATE
A	RELEASE TO PRODUCTION	OKM	07/29/24		

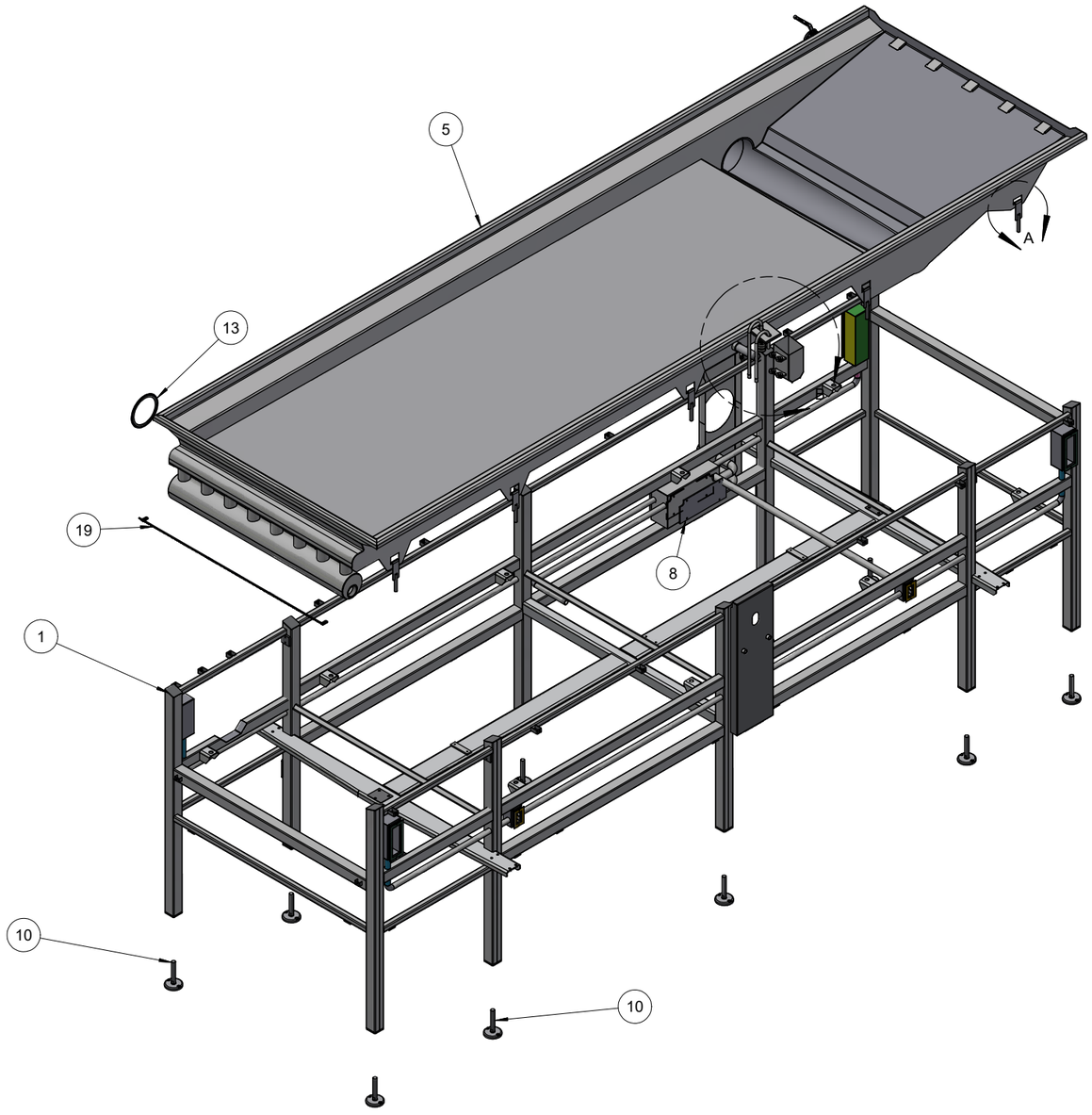

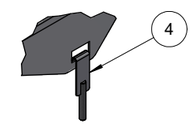

DETAIL A
SCALE 0.12 : 1

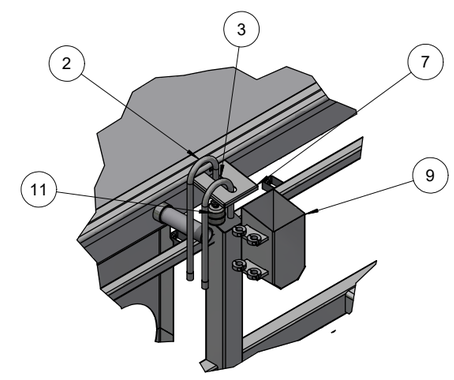

DETAIL B
SCALE 0.12 : 1

MATERIALS LIST

ITEM	LE PART NUMBER	DESCRIPTION	QTY
1	242471-001	FRAME WELDMENT	1
2	341595-001	ADJ LEVEL SWITCH PIPE	1
3	341596-001	ADJ LEVEL SWITCH PIPE	1
4	404990-001	TANK HOLD DOWN ADJUSTER 0CF24	10
5	406150-001	TANK WELDMENT KETL	1
19	415168-001	OIL DISTRIBUTION PLATE	1
7	422193-001	LEVEL BOX COVER 0CF2412-01	1
8	424183-001	FRYER ELECTRIAL BOX PANEL	1
9	446389-001	OIL LEVEL BOX	1
10	MH020-17	VIBRATION PAD MIG	10
11	MH031-23	HIGH TEMP LIQUID LEVEL SWITCH	1
13	MH040-34	GASKET 150LB FLANGE 6.00 REINF	1
21	MH040-11	GASKET 150LB FLANGE 1.00	2
22	VA002-70	BALL VALVE HIGH TEMP 1.0IN	1

REMOVE ALL BURRS AND BREAK ALL SHARP EDGES
TOLERANCES EXCEPT AS NOTED
DECIMALS .XX ± .01
.XXX ± .005
ANGLES ± 1/2°

THIS DRAWING IS OF A CONFIDENTIAL NATURE AND IS THE EXCLUSIVE PROPERTY OF THE OWNER. COMPANY AND MAY NOT BE REPRODUCED, USED OR DISCLOSED WITHOUT PRIOR WRITTEN PERMISSION OF THE OWNER.

LAWRENCE EQUIPMENT
2034 NORTH PECK ROAD
SO. EL MONTE, CALIFORNIA 91733
(626) 442-2894 TELEX 704116
TOLL FREE (800) 423-4500

FRYER FRAME ASSY 0CF6018
0CF6018-02

DRAWN BY cmorales	DATE 10/7/2020	SCALE: none	
CHECKED BY	DATE	DRAWING NO. 505971	REV A / SHEET 1 of 1
APPROVED BY	DATE		

NO	REVISION	BY	DATE	BY	DATE
A)	RELEASE TO PRODUCTION	CMG	10/07/20		

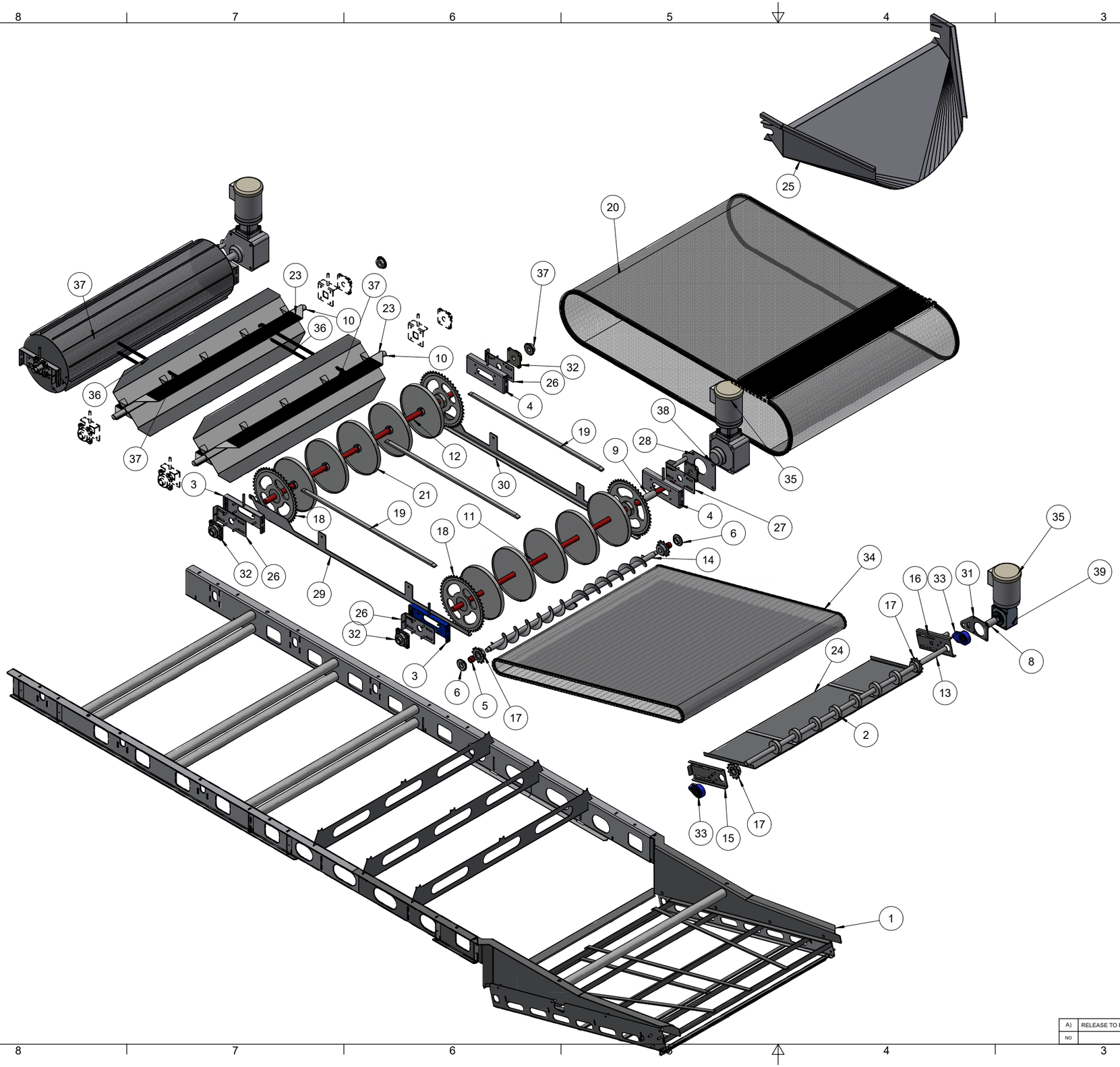

MATERIALS LIST

ITEM	LE PART NUMBER	DESCRIPTION	QTY
1	270774-001	CONVEYOR FRAME WELD 0CF6018-02	1
2	302365	DISCHARGE BELT SUPPORT SPACER	7
3	307005-001	SUBMERGER TAKEUP PLATE AS SHOW	2
4	307005-002	SUBMERGER TAKEUP PLATE OPPOSIT	4
5	307300-001	RULON IDLE BUSHING	2
6	307301-001	DSCHRG IDLE SHAFT BUSHING CAP	2
7	307790-001	TOSTADA DRUM WITH PADDLE	1
8	313491-005	MOTOR SHAFT SPACER X 3.000 in LG	1
9	313491-006	MOTOR SHAFT SPACER 0CF2412-01	2
10	314123-002	PADDLE WHEEL DRIVE SHAFT	2
11	314398-001	DRIVE SHAFT MAIN PADDLE BELT	1
12	314399-001	IDLE SHAFT PADDLE CONV 0CF3618	1
13	314400-001	DISCHARGE DRIVE SHAFT 0CF6018	1
14	330463-001	DISCHARGE IDLE ROLLER/AUGER	1
15	340950-001	DISCHARGE BEARING MOUNT AS/SHW	1
16	340954-001	DISCHARGE BEARING MOUNT	1
17	360194-001	SPRKT.SS 2042B12 - 1.25 BORE	4
18	360497-001	SPROKET 2042B30 1.25 BORE SS 35T	4
19	390025-071	FLAT SS, 0.50 x 1.00 - 46.00 LG.	3
20	390075-001	FRYER MESH FLIGHTS	1
21	402902-003	SUBMERGER BELT SPACER	10
23	406153-001	PADDLE WELDMENT- 2 BLADE	4
24	406154-001	CHIP CONV DISCHARGE PAN 0CF36	1
25	406155-001	CHUTE DISCHARGE	1
26	412609-001	TAKE-UP SLIDE BRACKET 0CF2412	4
27	412613-001	TAKE-UP SLIDE REACTION ARM	2
28	415999-001	REACTION ARM ST180-03	2
29	414976-001	BELT SUPPORT RAIL 0CF3618-06	1
30	414976-002	BELT SUPPORT RAIL 0CF3618-06	1
31	415595-001	REACTION ARM SR110-37 0CF2412	1
32	BG006-15SS	4 BLT FLNG BRG 1.25 BORE SS	5
33	BG016-03-P	3 BLT FLNG 1.25 SHAFT DIA N/P	2
34	MB157-01	BALANCE WEAVE 304SS 31.25WD	1
35	MO101-80	MOTOR 0.5HP 460V SS W/D 56C TENV	3
36	RC040-05	CHAIN S/S	2
37	SP40B1820-S	SPRKT. SS 40B18- 1.25 BORE	5
38	SR110-36	SPEED RED 8.75RPM OUT 1.25BORE	2
39	SR110-37	SPEED RED 29.2RPM OUT 1.25BORE	1
41	314439-001		1

REMOVE ALL BURRS AND BREAK ALL SHARP EDGES
TOLERANCES EXCEPT AS NOTED
DECIMALS .XX ± .01
.XXX ± .005
ANGLES ± 1/2°

THIS DRAWING IS OF A CONFIDENTIAL NATURE AND IS THE EXCLUSIVE PROPERTY OF LAWRENCE EQUIPMENT, AND MAY NOT BE REPRODUCED, USED OR DISCLOSED WITHOUT PRIOR WRITTEN PERMISSION OF THE OWNER.

LAWRENCE EQUIPMENT
2034 NORTH PECK ROAD
SO. EL MONTE, CALIFORNIA 91733
(626) 442-2894 TELEX 704116
TOLL FREE (800) 423-4500

FRYER CONVEYOR ASSY 0CF6018-02
0CF6018-02

DRAWN BY cmorales	DATE 10/7/2020	SCALE: none	
CHECKED BY	DATE	DRAWING NO. 510960	REV A / SHEET 1 of 1
APPROVED BY	DATE		

NO	REVISION	BY	DATE	BY	DATE
A)	RELEASE TO PRODUCTION	CMG	10/07/20		

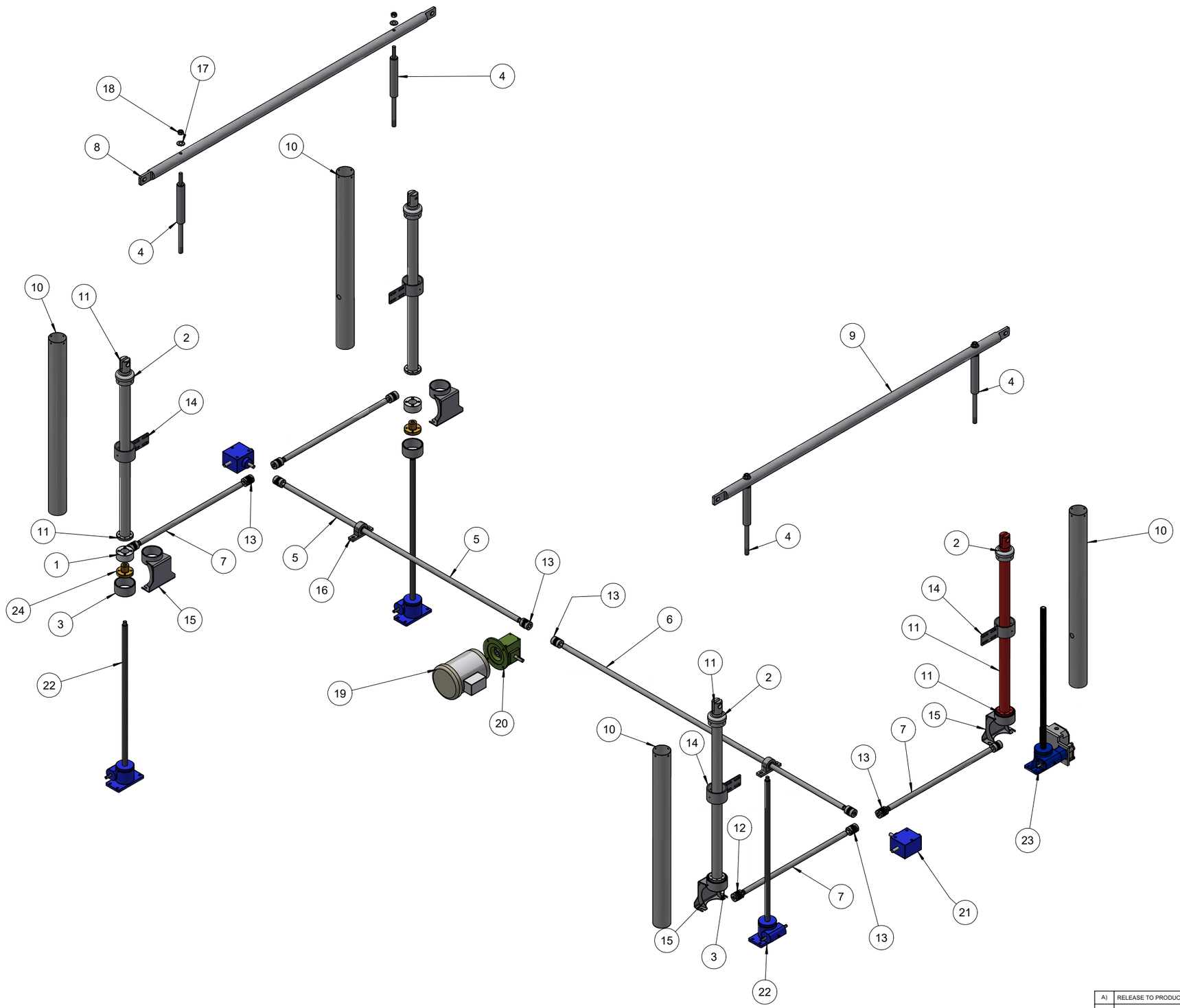

MATERIALS LIST

ITEM	LE PART NUMBER	DESCRIPTION	QTY
1	302355-001	HOOD LIFT TRAVEL NUT BUSHING	4
2	302356	ACTUATOR TUBE CAP/BUSHING	4
3	305338-001	SCREW JACK COLLAR	4
4	308525-001	HOOD LIFT TELESCOPIC SHAFT	4
5	312743-004	SHAFT HOOD LIFT 66.500	1
6	312743-009	SHAFT HOOD LIFT 76.00	1
7	312743-010	SHAFT HOOD LIFT 17.625"	4
8	314127-007	HOOD LIFT CROSS BAR INFEED	1
9	314127-008	HOOD LIFT CROSS BAR DISCHARGE	1
10	340283-005	HOOD LIFT TUBE 40.670 in LG.	4
11	340645-002	HOOD LIFT PISTON 0CF3618-08	4
12	380447-001	MODIFIED COUPLING SA001-182	4
13	380448-001	MODIFIED COUPLING SA001-181	8
14	412507-001	HOOD LIFT TUBE BRACKET	4
15	414269-001	SCREW JACK HOLDING BRACKET	4
16	BG007-07SS	PILLOW BLOCK 1.00 BORE SS	2
17	FA457013	FLAT WASHER S/S USS .63	4
18	FA460019	HEX NUT,REG,SS, 0.63 x 11	4
19	MO101-108	1HP 1725RPM 56C TENV 460V 60HZ	1
20	SR105-03	SPD RED. 5-1 DBL OUTPUT SFT	1
21	SR301-01	MITER GEAR BOX 1 TO 1	2
22	SR306-16	WORM GEAR SCREW JACK 30 RISE	3
23	SR306-17	SCREW JACK/W LIMIT SWITCH	1
24	SR999-06	TRAVELING NUT 2TON 1.00 ACME	4

NO	REVISION	BY	DATE	BY	DATE
A)	RELEASE TO PRODUCTION	CMG	10/07/20		

REMOVE ALL BURRS AND BREAK ALL SHARP EDGES
TOLERANCES EXCEPT AS NOTED
DECIMALS .XX ± .01
.XXX ± .005
ANGLES ± 1/2°

THIS DRAWING IS OF A CONFIDENTIAL NATURE AND IS THE EXCLUSIVE PROPERTY OF LAWRENCE EQUIPMENT, AND MAY NOT BE REPRODUCED, USED OR DISCLOSED WITHOUT PRIOR WRITTEN PERMISSION OF THE OWNER.

LAWRENCE EQUIPMENT
2034 NORTH PECK ROAD
SO. EL MONTE, CALIFORNIA 91733
(626) 442-2894 TELEX 704116
TOLL FREE (800) 423-4500

FRYER HOOD LIFT ASSY 0CF6018
0CF6018-02

DRAWN BY	DATE	SCALE:	
cmorales	10/7/2020	none	
CHECKED BY	DATE	DRAWING NO.	REV / SHEET
		590084	A / 1 of 1
APPROVED BY	DATE		