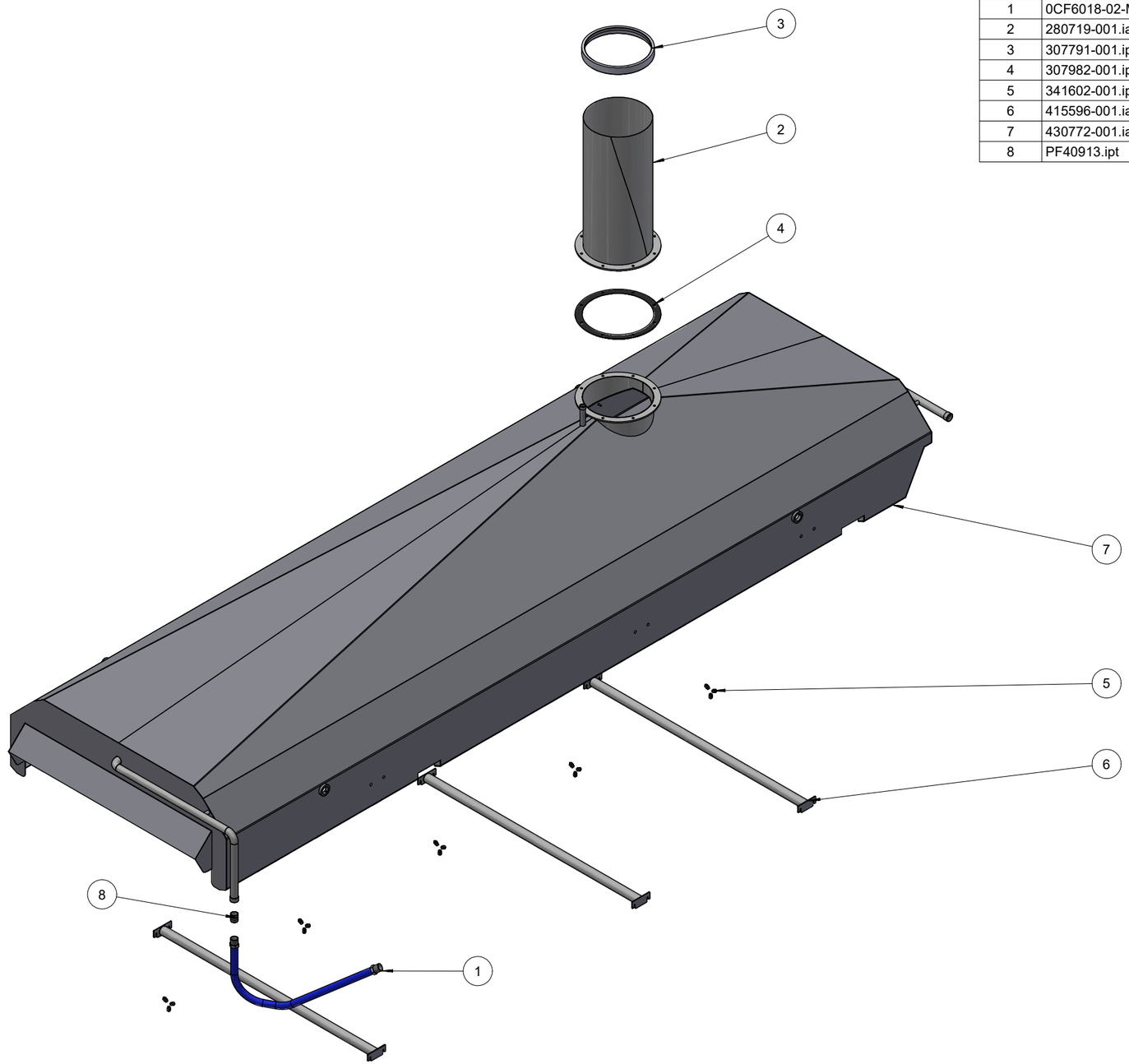

MATERIALS LIST

ITEM	FILE NAME	LE PART NUMBER	DESCRIPTION	QTY
1	0CF6018-02-MH023-46.ipt	MH023-46	SS 1.5 HOSE WITH SS WIRE BRAID	1
2	280719-001.iam	280719-001	FRYER HOOD EXHAUST DUCT	1
3	307791-001.ipt	307791-001	DUCT TELESCOPE PLASTIC RING	1
4	307982-001.ipt	307982-001	FRYER HOOD EXHAUST GASKET	1
5	341602-001.ipt	341602-001	SPRAY NOZZLE 3/8	15
6	415596-001.iam	415596-001	HOOD BRACKETING 0CF6018-02	3
7	430772-001.iam	430772-001	HOOD WELDMENT 0CF3618	1
8	PF40913.ipt	PF40913	NIPPLE SS 1.50 X 2.0 LG.	1

NO	REVISION	BY	DATE	BY	DATE
B	UPDATED DESIGN	NWM	02/02/24		
A)	RELEASE TO PRODUCTION	CMG	10/07/20		

REMOVE ALL BURRS AND BREAK ALL SHARP EDGES

TOLERANCES EXCEPT AS NOTED
DECIMALS .XX ± .01
.XXX ± .005
ANGLES ± 1/2°

THIS DRAWING IS OF A CONFIDENTIAL NATURE AND IS THE EXCLUSIVE PROPERTY OF LAWRENCE EQUIPMENT. IT MAY NOT BE REPRODUCED, USED OR DISCLOSED WITHOUT PRIOR WRITTEN PERMISSION OF THE OWNER.

LAWRENCE EQUIPMENT
2034 NORTH PECK ROAD
SO. EL MONTE, CALIFORNIA 91733
(626) 442-2894 TELEX 704116
TOLL FREE (800) 423-4500

HOOD ASSEMBLY 0CF6018-02
0CF6018-02

DRAWN BY cmorales	DATE 10/7/2020	SCALE: none	
CHECKED BY	DATE	DRAWING NO. 590085	REV B / SHEET 1 of 1
APPROVED BY	DATE		

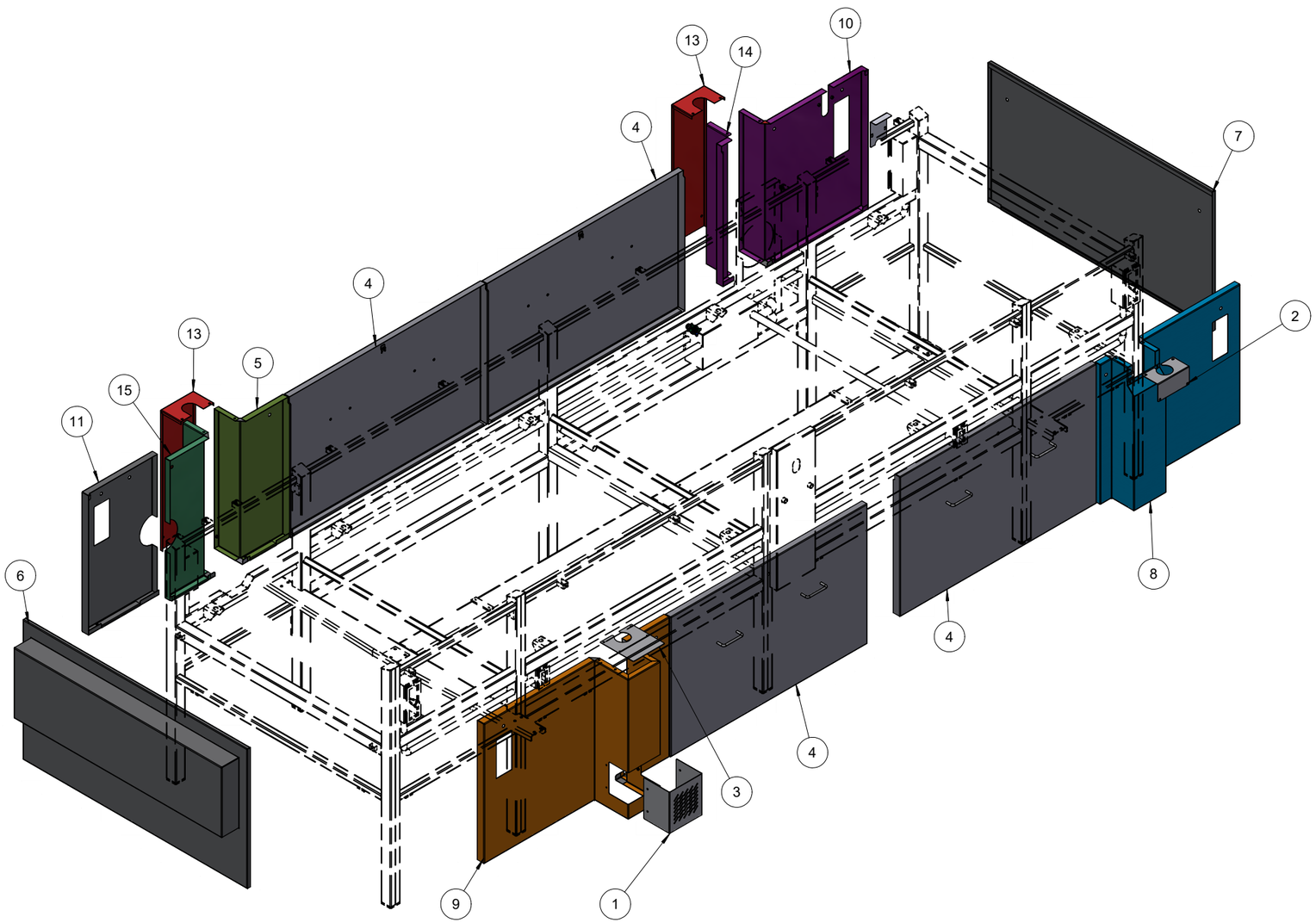

MATERIALS LIST

ITEM	LE PART NUMBER	DESCRIPTION	QTY
1	405968-001	SWITCH COVER	1
2	430426-001	JACK SCREW COVER 0CF2412	1
3	430635-001	JACK SCREW COVER 0CF3618	1
4	430658-001	LATERAL COVER MIDDLE 0CF	4
5	430662-002	LATERAL COVER BACK LEFT	1
6	430773-001	BACK COVER 0CF3618-06	1
7	430774-001	FRONT COVER 0CF	1
8	430775-001	LATERAL COVER FRONT RIGHT 0CF	1
9	430776-001	LATERAL COVER BACK RIGHT 0CF36	1
10	430777-001	LATERAL COVER FRONT LEFT 0CF	1
11	430778-001	LATERAL COVER BACK RIGHT 0CF36	1
12	432762-001	LATERAL COVER FRONT LEFT TOP	1
13	432771-001	LATERAL COVER FRONT 0CF	2
14	432772-001	SM LATERAL COVER FRONT LH 0CF	1
15	432795-001	LG LATERAL COVER BACK W/CUTOUT	1
16	MH011-25	HEX LOCK TYPE LATCH	2

NO	REVISION	BY	DATE	BY	DATE
A)	RELEASE TO PRODUCTION	CMG	10/07/20		

REMOVE ALL BURRS AND BREAK ALL SHARP EDGES
TOLERANCES EXCEPT AS NOTED
DECIMALS .XX ± .01
.XXX ± .005
ANGLES ± 1/2°

THIS DRAWING IS OF A CONFIDENTIAL NATURE AND IS THE EXCLUSIVE PROPERTY OF THE LAWRENCE COMPANY AND MAY NOT BE REPRODUCED, USED OR DISCLOSED WITHOUT PRIOR WRITTEN PERMISSION OF THE OWNER.

LAWRENCE EQUIPMENT
2034 NORTH PECK ROAD
SO. EL MONTE, CALIFORNIA 91733
(626) 442-2894 TELEX 704116
TOLL FREE (800) 423-4500

COVER/GUARD ASSEMBLY 0CF6018
0CF6018-02

DRAWN BY cmorales	DATE 10/7/2020	SCALE: none	
CHECKED BY	DATE	DRAWING NO. 630338	REV A / SHEET 1 of 1
APPROVED BY	DATE		

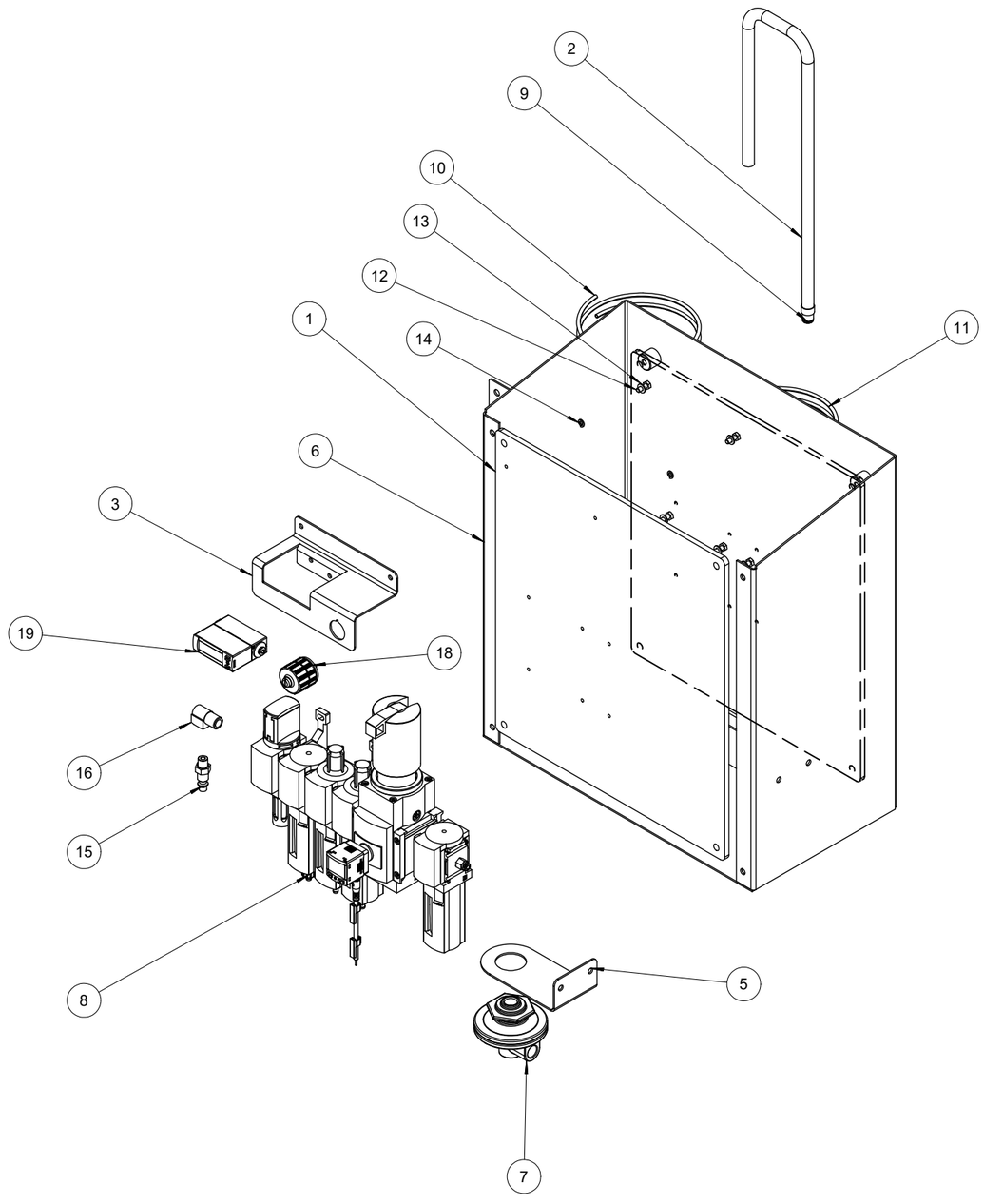

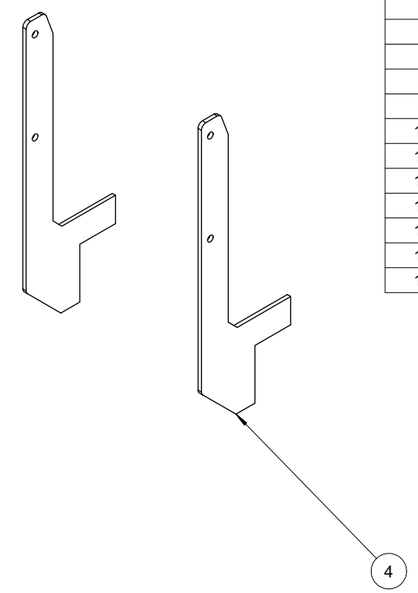

MATERIALS LIST

ITEM	LE PART NUMBER	DESCRIPTION	QTY
1	307138-001	ELEC. PANEL OIL LEVEL CONTOROL	1
2	307227-001	OIL LEVEL TUBE W/HALF COUPLING	1
3	407199-001	MOUNT BTK FOR SENSOR	1
4	415023-001	BRACKET MOUNT FOR 446148-001	2
5	415572-001	MOUNT BRKT FOR PRESS REQULATOR	1
6	446148-001	OIL LEVEL CONTROL BOX	1
7	AP007-10	CONSTANT DIFFERENTIAL REQ	1
8	AP009-209	VALVE MANIFOLD FRYER BUBBLER	1
9	AP017-105	PUSHLOCK FTTNG STRGHT 1/8-6MM	1
10	AP018-12	PLASTIC TUBING 6MM OD SILVER	6 ft
11	AP018-18	PLASTIC TUBING 4MM	3 ft
12	FA440000-10	HEX HD CAP SCRW S/S 10-24X0.50 LG	10
13	FA457005	FLAT WASHER S/S USS 10	10
14	FA457305	SPLIT LOCK WASHER S/S 10	10
15	HF200-01	HOSE COUPLING MALE ONLY .25NPT	1
16	PF50802	ELBOW STREET BRASS .25	1

NO	REVISION	BY	DATE	BY	DATE
c)	ADD AP007-10, 415572-001	YZ	07/21/20		
b)	REPLACE 407199-001, WAS 407048-001	YZ	08/07/19		
a)	RELEASE TO PRODUCTION	YZ	02/26/18		

REMOVE ALL BURRS AND BREAK ALL SHARP EDGES
TOLERANCES EXCEPT AS NOTED
DECIMALS .XX ± .01
.XXX ± .005
ANGLES ± 1/2°

THIS DRAWING IS OF A CONFIDENTIAL NATURE AND IS THE EXCLUSIVE PROPERTY OF LAWRENCE EQUIPMENT, AND MAY NOT BE REPRODUCED, USED OR DISCLOSED WITHOUT PRIOR WRITTEN PERMISSION OF THE OWNER.

LAWRENCE EQUIPMENT
2034 NORTH PECK ROAD
SO. EL MONTE, CALIFORNIA 91733
(626) 442-2894 TELEX 704116
TOLL FREE (800) 423-4500

PNEUMATIC OIL LEVEL CONTROL
0CF ALL

DRAWN BY	DATE	SCALE:		
yzhang	2/26/2018			
CHECKED BY	DATE	DRAWING NO.	REV	SHEET
		580140	c)	1 of 1
APPROVED BY	DATE			

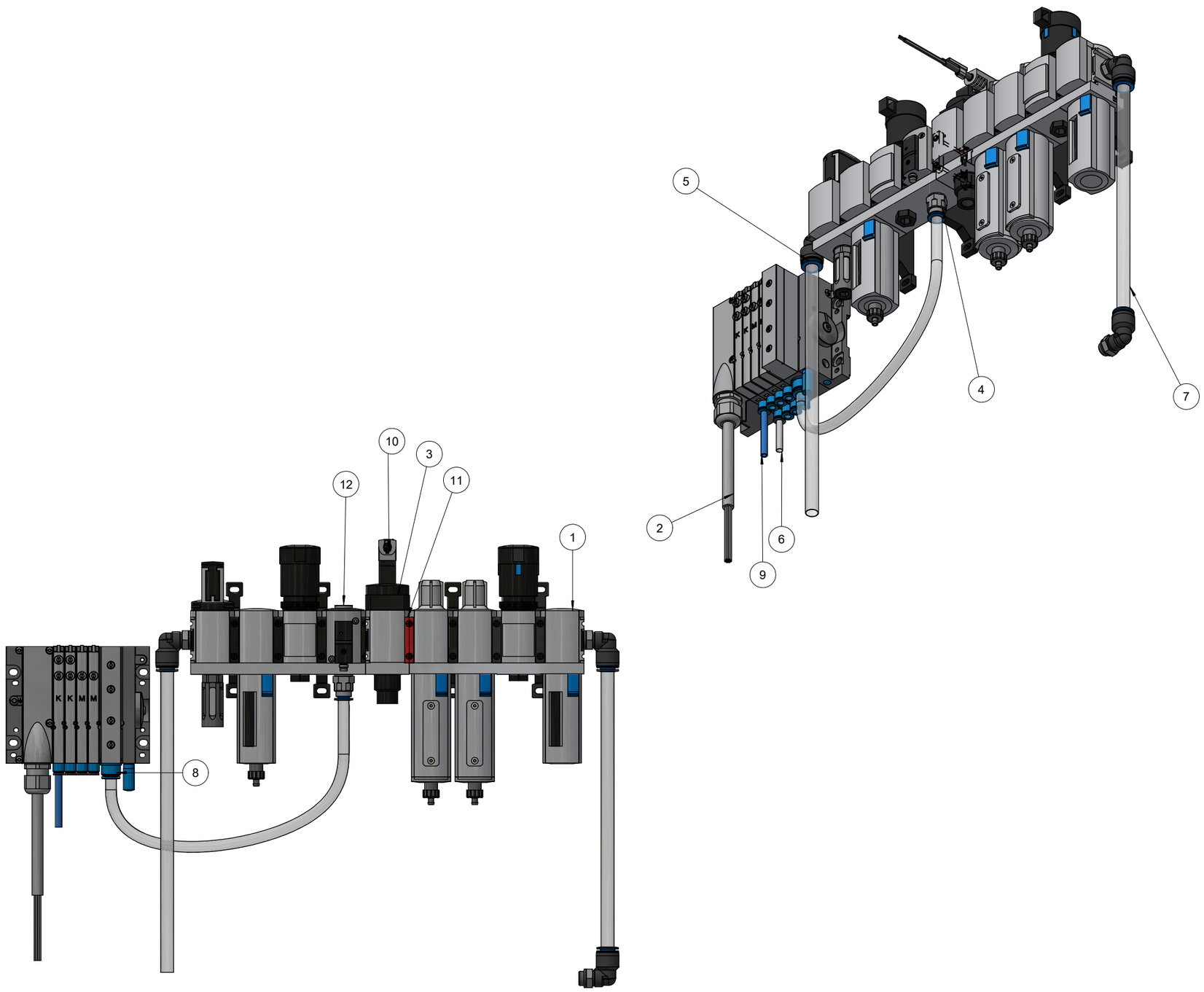

MATERIALS LIST

ITEM	LE PART NUMBER	DESCRIPTION	QTY
1	AP004-65	COMBO UNIT FOOD GRADE FLTR CRN	1
2	AP009-168	VALVE MANIFOLD OVEN/COOLER	1
3	AP009-221	VALVE ON-OFF 1/4 24VDC	1
4	AP017-141	PUSH-IN STRAIGHT 1/4NPT-10MM	1
5	AP017-142	PUSH-IN 90DEG G1/4-12MM	3
6	AP018-12	PLASTIC TUBING 6MM OD SILVER	50 ft
7	AP018-14	PLASTIC TUBING 12MM O.D.	50 ft
8	AP018-16	PLASTIC TUBING 10MM	5 ft
9	AP018-17	PLASTIC TUBING 6X1 DUO	50 ft
10	AP999-16	SOCKET CONNECTOR CABLE	1
11	AP999-94	MODULE CONN MS4 SERIES	1
12	AP999-122	VALVE PLUG SCREW G1/4	1

NO	REVISION	BY	DATE	BY	DATE
c)	REMOVE AP007-10	YZ	07/21/20		
b)	ADDED AP007-10	JSO	07/20/20		
a)	RELEASE TO PRODUCTION	YZ	07/17/19		

REMOVE ALL BURRS AND BREAK ALL SHARP EDGES

TOLERANCES EXCEPT AS NOTED

DECIMALS .XX ± .01
.XXX ± .005
ANGLES ± 1/2°

THIS DRAWING IS OF A CONFIDENTIAL NATURE AND IS THE EXCLUSIVE PROPERTY OF LAWRENCE EQUIPMENT, AND MAY NOT BE REPRODUCED, USED OR DISCLOSED WITHOUT PRIOR WRITTEN PERMISSION OF THE OWNER.

LAWRENCE EQUIPMENT
2034 NORTH PECK ROAD
SO. EL MONTE, CALIFORNIA 91733
(626) 442-2894 TELEX 704116
TOLL FREE (800) 423-4500

PNEUMATIC ASSY FRYER SUPRT MOD 0CF3618-08

DRAWN BY yzhang	DATE 3/20/2019	SCALE:		
CHECKED BY	DATE	DRAWING NO. 580144	REV c)	SHEET 1 of 1
APPROVED BY	DATE			

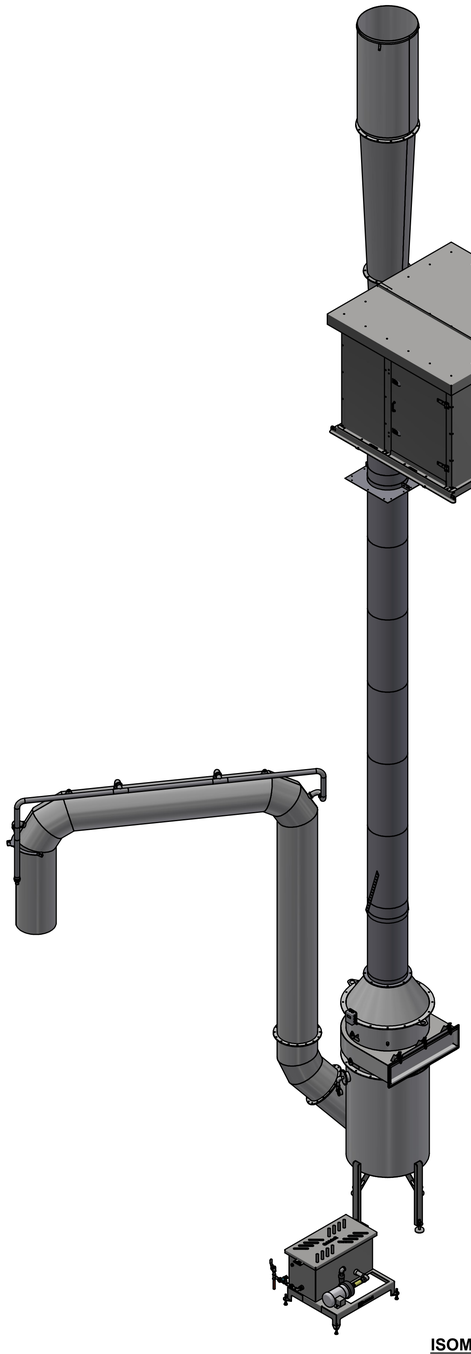

ISOMETRIC VIEW

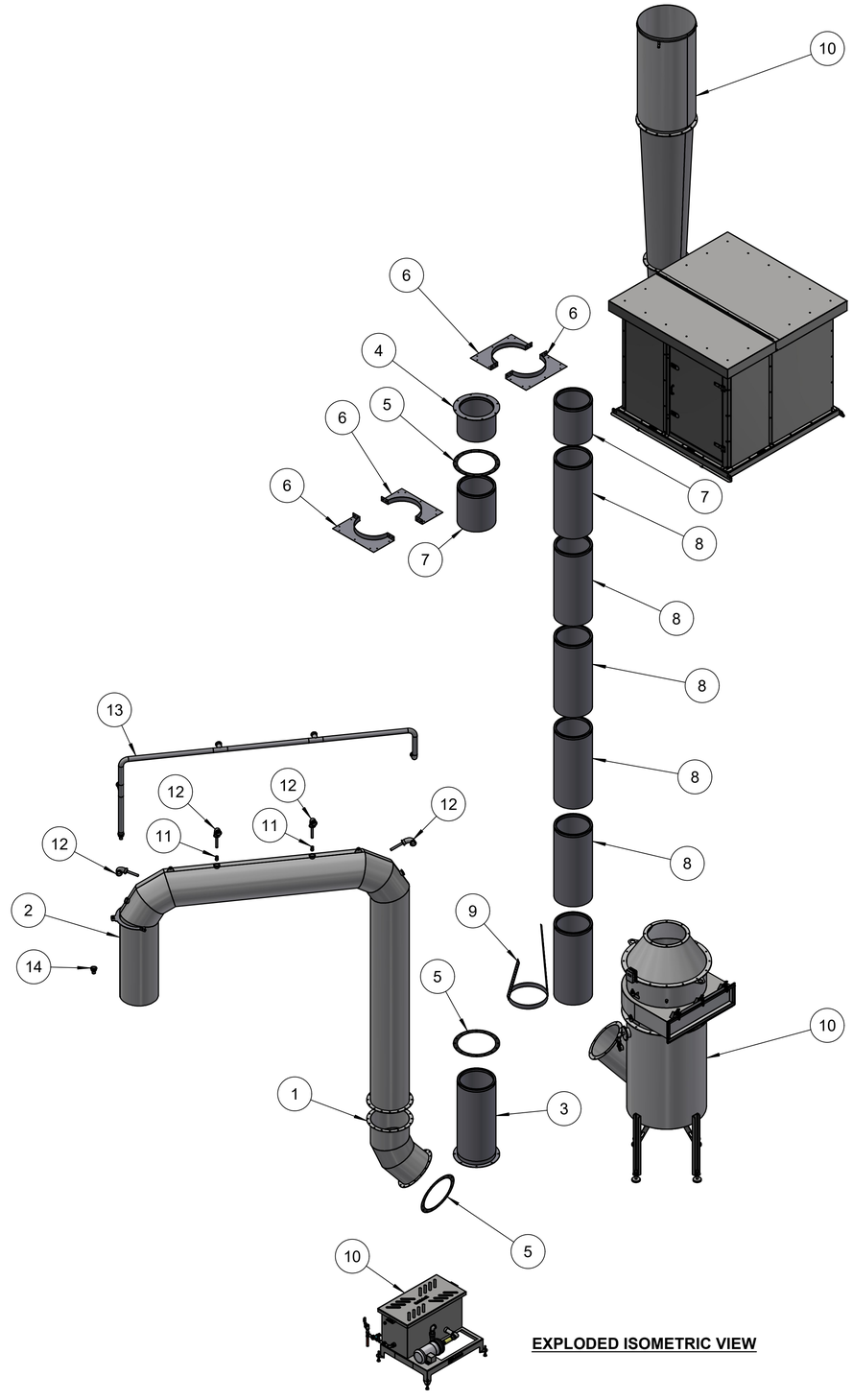

EXPLODED ISOMETRIC VIEW

MATERIALS LIST

ITEM	LE PART NUMBER	DESCRIPTION	QTY
1	280717-001	QUICKDRAFT INLET ADAPTER	1
2	280718-001	FRYER EXHAUST DUCT TO QF	1
3	285427-001	QUICKDRAFT EXHAUST ADAPTER	1
4	285428-001	QUICKDRAFT EXHAUST ADAPTER	1
5	307983-001	QUICKDRAFT GASKET	4
6	424389-001	FRYER EXHAUST COVER	4
7	GT099-134	CHIMNEY SS 14ID X 16OD X 18LG	2
8	GT099-136	CHIMNEY SS 14ID X 16OD X 36LG	6
9	GT099-140	ELBOW STRAP 12 X 14IN DUCT	1
10	VM096-08	QUICK EXH UNIT 460V 4000CFM	1
11	MH016-17	SPRAY NOZZLE - STACK CIP	4
12	417031-001	CIP NOZZLE PIPE	4
13	280736-001	CIP MANIFOLD QUICKDRAFT	1
14	SF006-28	ADAPTER 2.0 TUBE TO 1.0 PIPE	1

NO	REVISION	BY	DATE	BY	DATE
A	RELEASE TO PRODUCTION	OKM	08/20/24		

REMOVE ALL BURRS AND BREAK ALL SHARP EDGES
TOLERANCES EXCEPT AS NOTED
DECIMALS .XX ± .01
.XXX ± .005
ANGLES ± 1/2°

THIS DRAWING IS OF A CONFIDENTIAL NATURE AND IS THE EXCLUSIVE PROPERTY OF LAWRENCE EQUIPMENT, AND MAY NOT BE REPRODUCED, USED OR DISCLOSED WITHOUT PRIOR WRITTEN PERMISSION OF THE OWNER.

LAWRENCE EQUIPMENT
2034 NORTH PECK ROAD
SO. EL MONTE, CALIFORNIA 91733
(626) 443-2894 TELEX 704116
TOLL FREE (800) 423-4500

FRYER EXH QUICK DRAFT 16 IN
0FE

DRAWN BY	DATE	SCALE:
OSCAR MARROQUIN	8/20/2024	
CHECKED BY	DATE	DRAWING NO. 8090151
APPROVED BY	DATE	REV A
		SHEET 1 of 1

MATERIALS LIST			
ITEM	LE PART NUMBER	DESCRIPTION	QTY
1	303117-80	PIPE .75-SCHD40-THRD ENDS 20LG	1
2	303117-104	PIPE .75-SCHD40-THRD ENDS 26.00	2
3	304075-005	THREADED TUBING 36.50LG.	2
4	304075-010	THREADED TUBING 14.50LG.	1
5	304075-032	THREADED TUBING 10.50LG.	1
6	304075-044	THREADED TUBING 25.00 LG	2
7	307112-001	FILTER ENCLOSURE GASKET	1
8	308400-001	GASKET RUBBER/CORK X 1/8	1
9	308585-001	GASKET RUBBER CORK	1
10	308586-001	GASKET RUBBER CORK	1
11	352246-010	LEG-HEIGHT ADJUSTER-6.25LG	4
12	357117-001	GASKET RUBBER/CORK 40 X 1/8	2
13	357118-001	TUBING FOR WIRE PASSAGE HT EXG	1
14	357205-001	TUBING FOR WIRE PASSAGE HT EXG	1
15	358787-001	ELECTRICAL CONDUIT	1
16	357344-001	TUBE WIRE SUPPORT ASPRTN CNYR	1
17	358767-001	TUBING FOR WIRE PASSAGE DISH	1
18	407166-001	TUBING SUPPORT PLATE	9
19	414857-001	TUBING WIRE SUPPORT BRKT	2
20	415273-001	TUBING WIRE CLAMP	2
21	415277-001	TUBE WIRE MNT BRACKET	1
22	415284-001	TUBING SUPPORT BRACKET	7
23	415403-001	HOOD LIFT TUBE BRACKET	4
24	421222-001	FILTER ENCLOSURE 8 x 8	1
25	443077-001	DIXCONNECT/CONTROL BOX CHIP LN	1
26	443078-001	DISCONNECT/CONTROL BOX HEAT EX	1
27	443081-001	DISCONNECT SCRAP CONV BOX	1
28	EH003-06	JUNC BOX ALUMIN ELECTROLETS 1	1
29	EH003-09	JUNCTION BOX ALUM JUNCT T .75	1
30	EH003-17	JUNCTION BOX ALUM ELBOW 1.00	5
31	EH012-55	STRAIGHT CONNECTOR NYLON 4.0IN	2
32	358842-001	FLANGE ADAPTER CIP	1

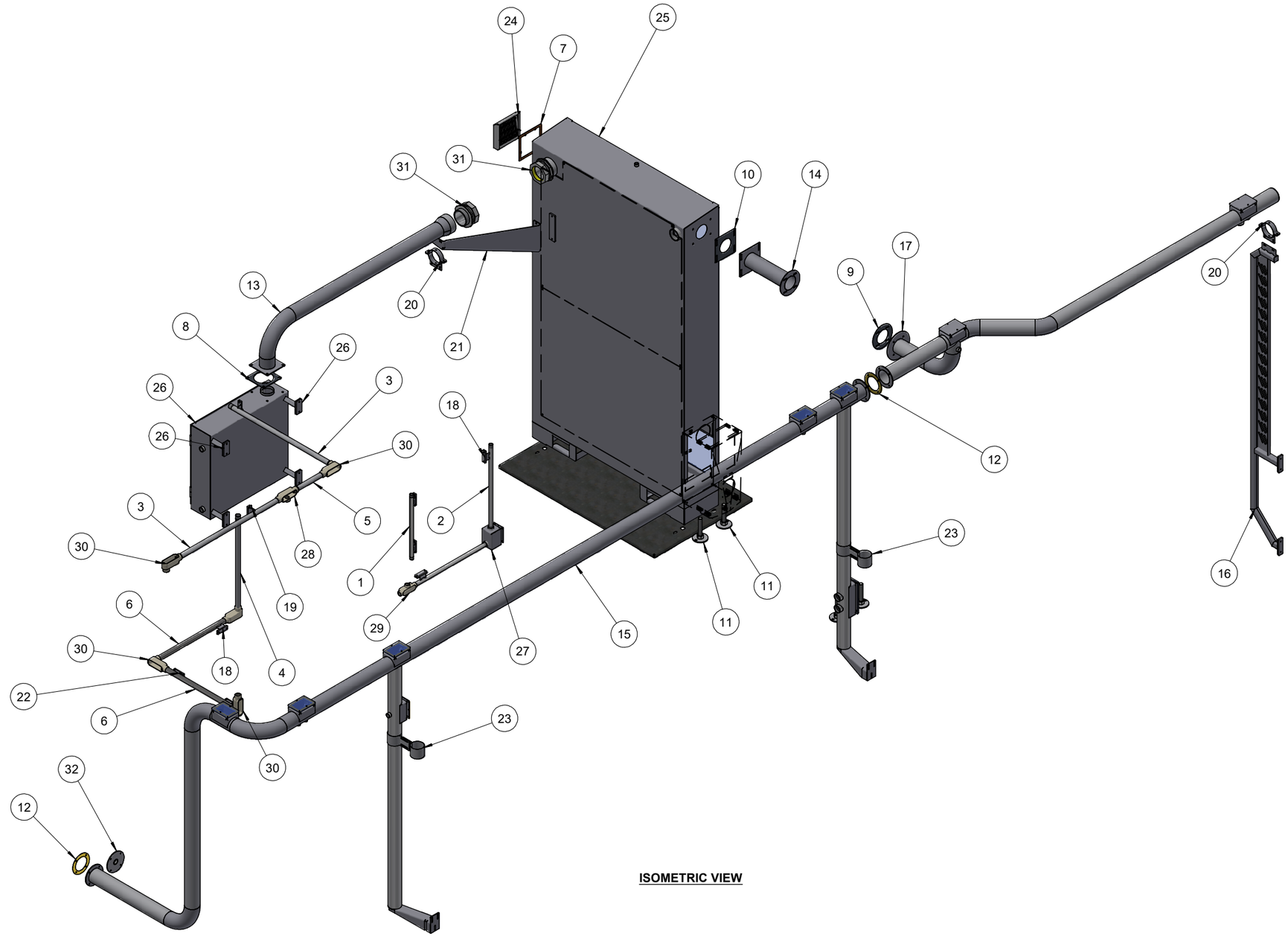

ISOMETRIC VIEW

NO	REVISION	BY	DATE	BY	DATE
A)	RELEASE TO PRODUCTION	OKM	08/21/24		

REMOVE ALL BURRS AND BREAK ALL SHARP EDGES
TOLERANCES EXCEPT AS NOTED
DECIMALS .XX ± .01
.XXX ± .005
ANGLES ± 1/2°

THIS DRAWING IS OF A CONFIDENTIAL NATURE AND IS THE EXCLUSIVE PROPERTY OF LAWRENCE EQUIPMENT, AND MAY NOT BE REPRODUCED, USED OR DISCLOSED WITHOUT PRIOR WRITTEN PERMISSION OF THE OWNER.

LAWRENCE EQUIPMENT
2034 NORTH PECK ROAD
SO. EL MONTE, CALIFORNIA 91733
(626) 442-2894 TELEX 704116
TOLL FREE (800) 423-4500

ELECTRICAL CONDUIT KIT ASSY
0CF6018-03

DRAWN BY	DATE	SCALE:	
Nicola	2/2/2024	none	
CHECKED BY	DATE	DRAWING NO.	REV / SHEET
		8090150	A / 1 of 1
APPROVED BY	DATE		

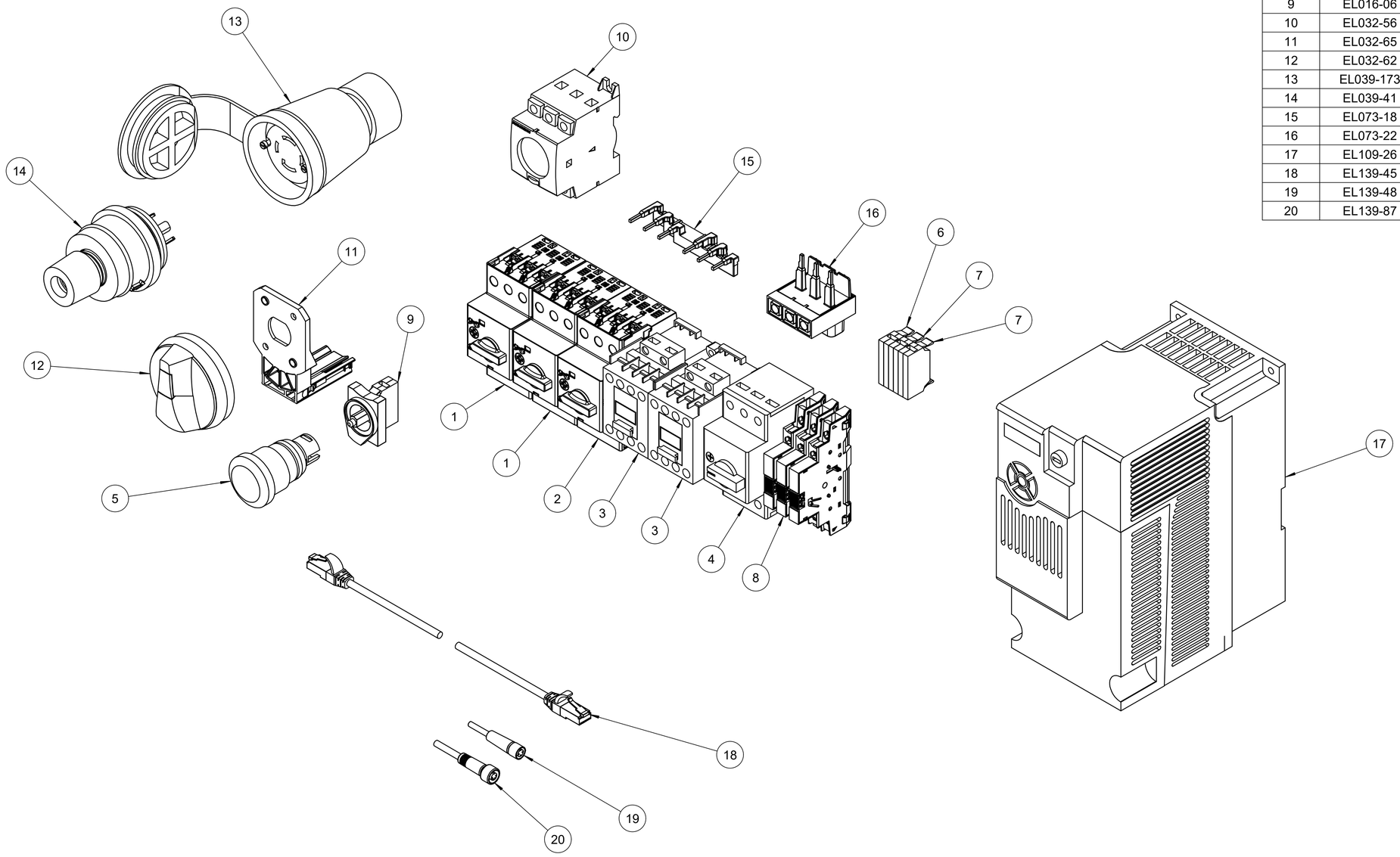

MATERIALS LIST

ITEM	LE PART NUMBER	DESCRIPTION	QTY
1	EL006-165	MANUAL MTR STARTER 1.00-1.60	2
2	EL006-163	MANUAL MTR STARTER 0.4-0.63A	1
3	EL006-97	CONTACTOR 9AMP 24VDC COIL 460V	2
4	EL006-159	MANUAL MTR STARTER 32.0 - 45.0	1
5	EL013-34	PUSH BUTTON ILLUM MUSHROOM RED	1
6	EL014-01	CONTACT BLOCK N.O.	1
7	EL014-02	CONTACT BLOCK N.C.	2
8	EL014-67	CONTACT BLOCKS AUX 1NO 1NC	3
9	EL016-06	LIGHT TERM W/BULB LATCH	1
10	EL032-56	DISCONNECT SWITCH 16 A	1
11	EL032-65	DOOR MOUNTING KIT	1
12	EL032-62	DISCONNECT SWITCH HANDLE Y/R	1
13	EL039-173	PLUG 20A 480V CORD GRIP WATERT	1
14	EL039-41	PLUG 20A 480V WATERTITE	1
15	EL073-18	MANUAL MTR JUMPER FOR 1	1
16	EL073-22	MOTOR OL BUSBAR FEED LUGS	1
17	EL109-26	ADJ FREQ DRV AB 20HP 528V 3	1
18	EL139-45	CABLE ETHERNET RJ45 MALE-MALE	1
19	EL139-48	CABLE FEMALE STRGHT 3PIN THRED	1
20	EL139-87	CABLE VALVE CONN. TO LEADS 24v	1

NO	REVISION	BY	DATE	BY	DATE
A	RELEASE TO PRODUCTION	OKM	07/29/24		

REMOVE ALL BURRS AND BREAK ALL SHARP EDGES

TOLERANCES EXCEPT AS NOTED
DECIMALS .XX ± .01
.XXX ± .005
ANGLES ± 1/2°

THIS DRAWING IS OF A CONFIDENTIAL NATURE AND IS THE EXCLUSIVE PROPERTY OF LAWRENCE EQUIPMENT, AND MAY NOT BE REPRODUCED, USED OR DISCLOSED WITHOUT PRIOR WRITTEN PERMISSION OF THE OWNER.

LAWRENCE EQUIPMENT
2034 NORTH PECK ROAD
SO. EL MONTE, CALIFORNIA 91733
(626) 442-2894 TELEX 704116
TOLL FREE (800) 423-4500

FRYR HEAT EXCHANGER 460V 60HZ
0SM3000-01

DRAWN BY	DATE	SCALE:
OSCAR MARROQUIN	7/29/2024	
CHECKED BY	DATE	
APPROVED BY	DATE	

DRAWING NO.	REV	SHEET
620320	A	1 of 1

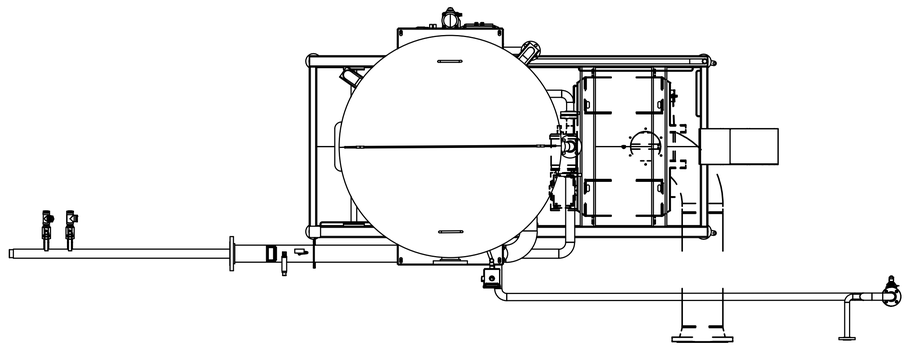

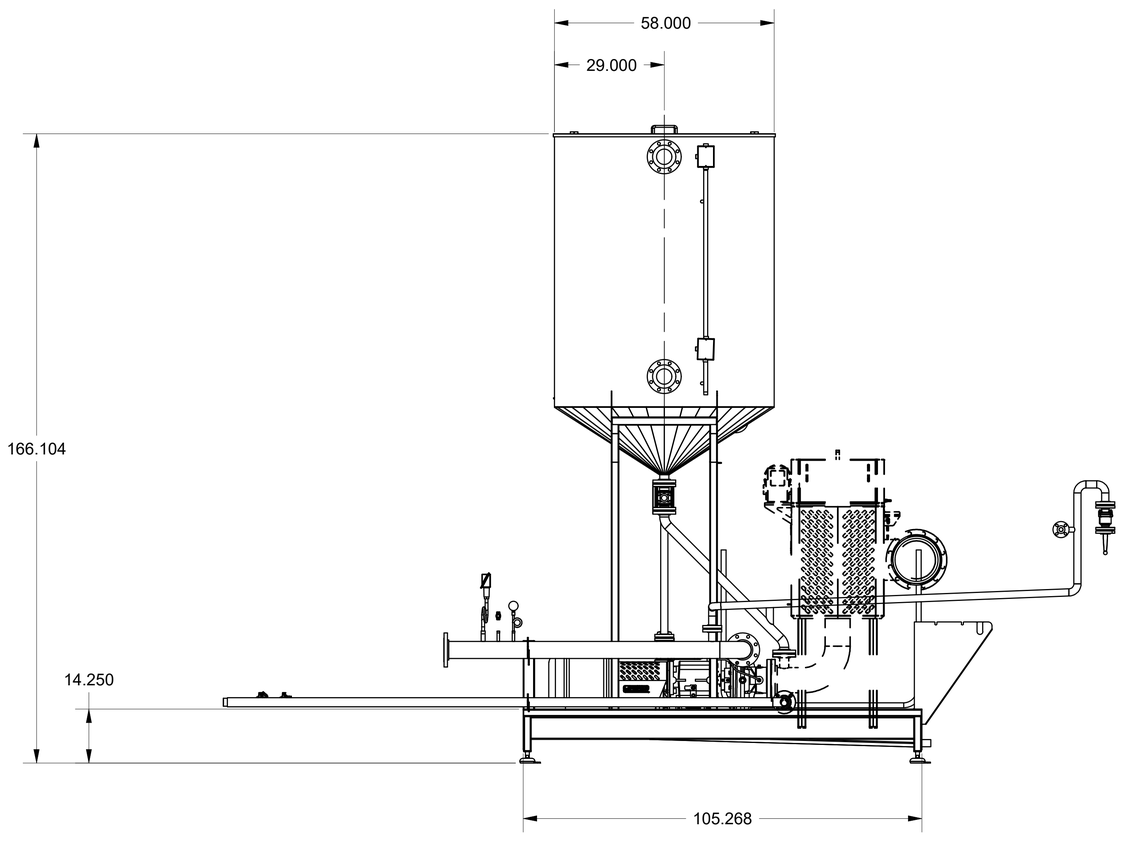

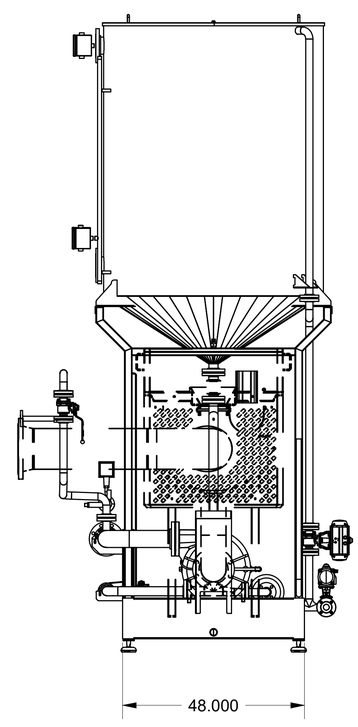

MATERIALS LIST

ITEM	LE PART NUMBER	DESCRIPTION	QTY
1	242473-001	FILTER PLATFORM	1
2	280584-001	DISCHARGE PUMP INLET PIPE	1
3	280708-001	DRAINING COLLECTING PIPE	1
4	280586-001	OIL TANK DRAIN PIPE	1
5	280587-001	SYSTEM DRAIN PIPE	1
6	280588-001	OILER STORAGE TANK 350G	1
7	280706-001	PUMP OUTLET PIPE	1
8	357339-001	FILTER PLATFORM ADJ SQ BAR	3
9	357340-001	FILTER PLATFORM	1
10	423533-001	OIL TANK LID 58IN DIA	1
11	424501-001	MOTOR COVER GUARD	1
12	HY005-22	GAUGE 30PSI S/S W GLYCERIN	1
14	MH017-42	HTO80 FLAT FLANGED PUMP 1HP	1
15	MH020-07	VIB PAD MIG 1.0-8UNC X 6.0LG	4
16	MH031-23	HIGH TEMP LIQUID LEVEL SWITCH	2
19	MH040-12	GASKET 150LB FLANGE 1.50	10
20	MH040-13	GASKET 150LB FLANGE 2.00	4
21	MH040-29	GASKET 150LB FLANGE 1.25	1
22	MH040-33	GASKET 150LB FLANGE 4.00 REINF	1
23	MH040-34	GASKET 150LB FLANGE 6.00 REINF	1
24	MH040-45	GASKET 150LB FLANGE 10 PIPE	1
25	MH041-10	GAUGE PROTECTING STEAM 1/4	1
26	MO120-01	20HP, 1800RPM, 230/460V MOTOR	1
29	SA001-81	COUPLING S-FLEX HUB 1.625 BORE	1
30	SA001-82	COUPLING S-FLEX SLEEVE TYPE 9H	1
31	SA001-83	COUPLING S-FLEX FLANGE TP 9SC	2
32	SA001-84	COUPLING S-FLEX HUB 2.00 BORE	1
33	SF012-30	PUMP 4RB-F16K CORNELL HOT OIL	1
34	VA002-69	BALL VALVE HIGH TEMP 1.5IN	1
36	VA002-71	BALL VALVE HIGH TEMP 2.0IN	1
64	280707-001	FRONT NOZZLE AND CIP PIPE	1
65	PF42412	FLANGE THEADED 1-1/2PIPE SIZE	1
68	280715-001	SYSTEM TANK FILLING PIPE	1
69	MH041-09	GAUGE PROTECTING STEAM 1/2	1
70	EL020-52	PRESSURE SWITCH HIGH TEMP 5-30	1
71	EL020-72	DIFF PRESSURE SWITCH ADJ	1
72	VA002-47	VALVE 1.0NPT CARBON STEEL	2
73	PF41108	TEE SS 1.00	2
74	PF40908	NIPPLE SS 1.00 CLO	2
75	PF4010806	BUSHING S/S 1.00 TO .75	4
76	280733-001	SCRAP CONVEYOR CONDUIT	1
77	446458-001	JUNCTION BOX 5 SUPPORT MODULE	2
78	280735-001	DRAIN PLUG FLANGED CAM LOCK	1
79	VA002-74	BALL VALVE HIGH TEMP 1.5IN	2

NO	REVISION	BY	DATE	BY	DATE
B	FIXED DWG NO. & ADDED BALLOONS	OKM	08/22/24		
A	RELEASE TO PRODUCTION	YZ	08/17/20		

REMOVE ALL BURRS AND BREAK ALL SHARP EDGES
TOLERANCES EXCEPT AS NOTED
DECIMALS .XX ± .01
.XXX ± .005
ANGLES ± 1/2°

THIS DRAWING IS OF A CONFIDENTIAL NATURE AND IS THE EXCLUSIVE PROPERTY OF LAWRENCE EQUIPMENT AND MAY NOT BE REPRODUCED, USED OR DISCLOSED WITHOUT PRIOR WRITTEN PERMISSION OF THE OWNER.

LAWRENCE EQUIPMENT
2034 NORTH PECK ROAD
SO. EL MONTE, CALIFORNIA 91733
(626) 442-2894 TELEX 704116
TOLL FREE (800) 423-4500

GASKET 150LB FLANGE 10 PIPE
0CF6018-02

DRAWN BY yzhang	DATE 8/18/2020	SCALE:	
CHECKED BY	DATE	DRAWING NO. 560141-001	REV B / SHEET 1 of 2
APPROVED BY	DATE		

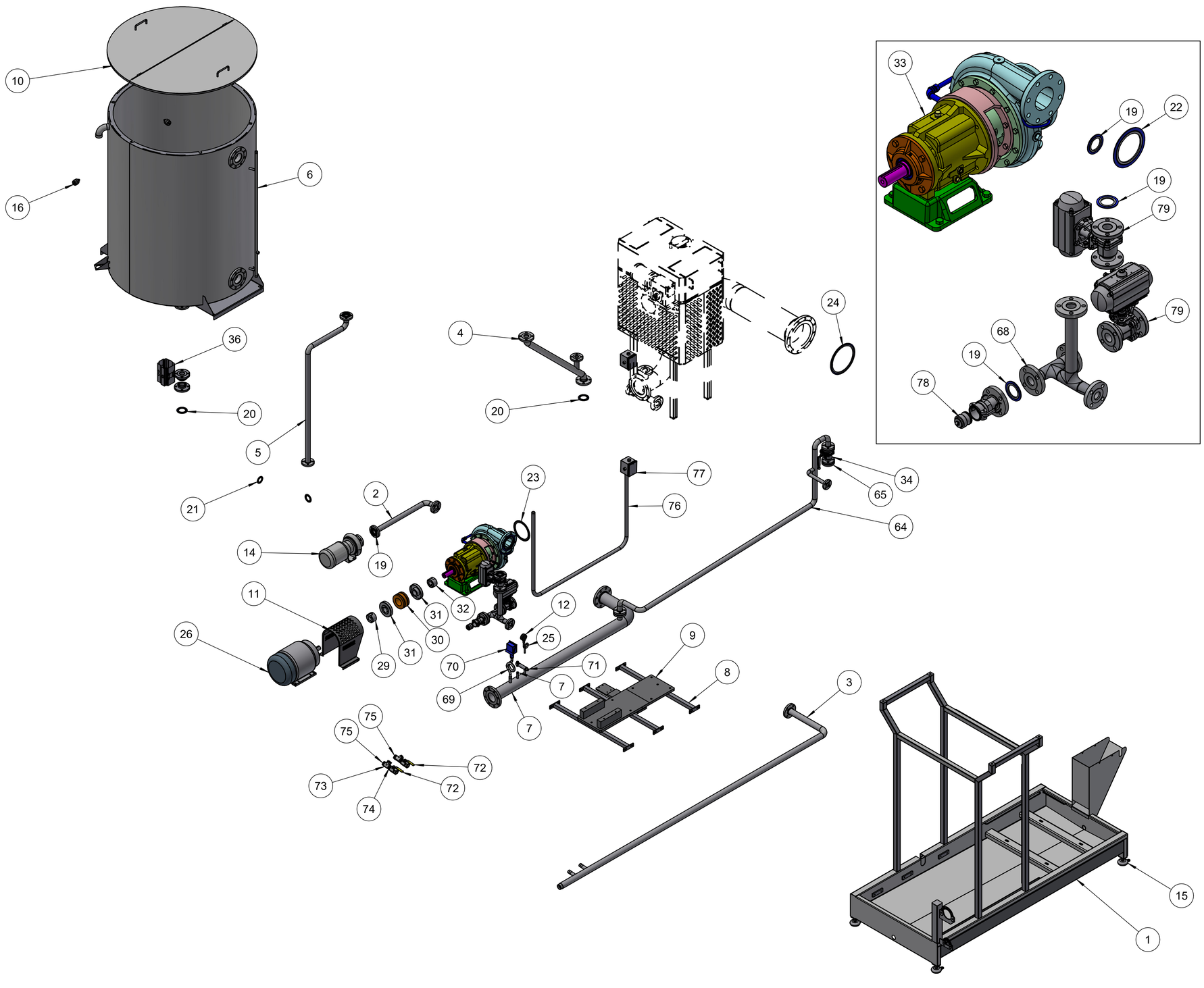

MATERIALS LIST

ITEM	LE PART NUMBER	DESCRIPTION	QTY
1	242473-001	FILTER PLATFORM	1
2	280584-001	DISCHARGE PUMP INLET PIPE	1
3	280708-001	DRAINING COLLECTING PIPE	1
4	280586-001	OIL TANK DRAIN PIPE	1
5	280587-001	SYSTEM DRAIN PIPE	1
6	280588-001	OILER STORAGE TANK 350G	1
7	280706-001	PUMP OUTLET PIPE	1
8	357339-001	FILTER PLATFORM ADJ SQ BAR	3
9	357340-001	FILTER PLATFORM	1
10	423533-001	OIL TANK LID 58IN DIA	1
11	424501-001	MOTOR COVER GUARD	1
12	HY005-22	GAUGE 30PSI S/S W GLYCERIN	1
14	MH017-42	HTO80 FLAT FLANGED PUMP 1HP	1
15	MH020-07	VIB PAD MIG 1.0-8UNC X 6.0LG	4
16	MH031-23	HIGH TEMP LIQUID LEVEL SWITCH	2
19	MH040-12	GASKET 150LB FLANGE 1.50	10
20	MH040-13	GASKET 150LB FLANGE 2.00	4
21	MH040-29	GASKET 150LB FLANGE 1.25	1
22	MH040-33	GASKET 150LB FLANGE 4.00 REINF	1
23	MH040-34	GASKET 150LB FLANGE 6.00 REINF	1
24	MH040-45	GASKET 150LB FLANGE 10 PIPE	1
25	MH041-10	GAUGE PROTECTING STEAM 1/4	1
26	MO120-01	20HP, 1800RPM, 230/460V MOTOR	1
29	SA001-81	COUPLING S-FLEX HUB 1.625 BORE	1
30	SA001-82	COUPLING S-FLEX SLEEVE TYPE 9H	1
31	SA001-83	COUPLING S-FLEX FLANGE TP 9SC	2
32	SA001-84	COUPLING S-FLEX HUB 2.00 BORE	1
33	SF012-30	PUMP 4RB-F16K CORNELL HOT OIL	1
34	VA002-69	BALL VALVE HIGH TEMP 1.5IN	1
36	VA002-71	BALL VALVE HIGH TEMP 2.0IN	1
64	280707-001	FRONT NOZZLE AND CIP PIPE	1
65	PF42412	FLANGE THEADED 1-1/2PIPE SIZE	1
68	280715-001	SYSTEM TANK FILLING PIPE	1
69	MH041-09	GAUGE PROTECTING STEAM 1/2	1
70	EL020-52	PRESSURE SWITCH HIGH TEMP 5-30	1
71	EL020-72	DIFF PRESSURE SWITCH ADJ	1
72	VA002-47	VALVE 1.0NPT CARBON STEEL	2
73	PF41108	TEE SS 1.00	2
74	PF40908	NIPPLE SS 1.00 CLO	2
75	PF4010806	BUSHING S/S 1.00 TO .75	4
76	280733-001	SCRAP CONVEYOR CONDUIT	1
77	446458-001	JUNCTION BOX 5 SUPPORT MODULE	2
78	280735-001	DRAIN PLUG FLANGED CAM LOCK	1
79	VA002-74	BALL VALVE HIGH TEMP 1.5IN	2

REMOVE ALL BURRS AND BREAK ALL SHARP EDGES
TOLERANCES EXCEPT AS NOTED
DECIMALS .XX ± .01
.XXX ± .005
ANGLES ± 1/2°

THIS DRAWING IS OF A CONFIDENTIAL NATURE AND IS THE EXCLUSIVE PROPERTY OF LAWRENCE EQUIPMENT, AND MAY NOT BE REPRODUCED, USED OR DISCLOSED WITHOUT PRIOR WRITTEN PERMISSION OF THE OWNER.

LAWRENCE EQUIPMENT
2034 NORTH PECK ROAD
SO. EL MONTE, CALIFORNIA 91733
(626) 442-2894 TELEX 704116
TOLL FREE (800) 423-4500

GASKET 150LB FLANGE 10 PIPE
0CF6018-02

DRAWN BY	DATE	SCALE:		
yzhang	8/18/2020			
CHECKED BY	DATE	DRAWING NO.	REV	SHEET
APPROVED BY	DATE	560141-001	B	2 of 2

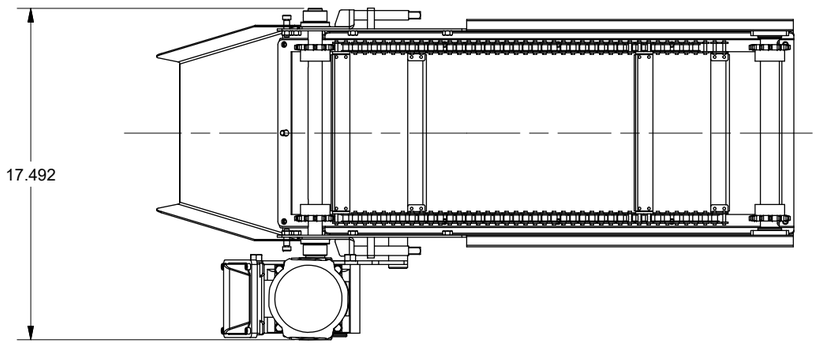

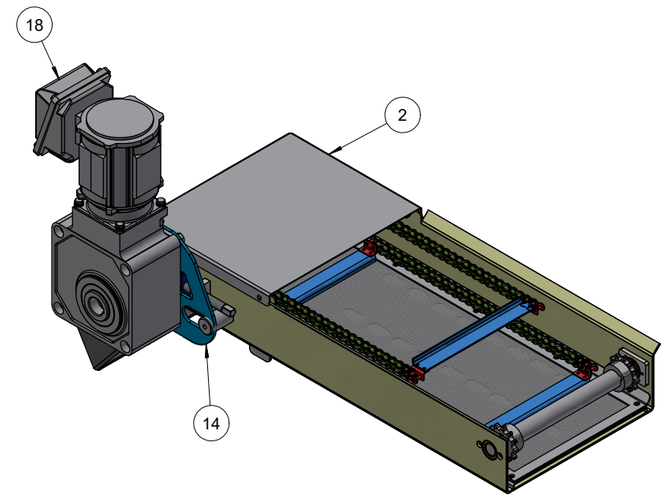

MATERIALS LIST

ITEM	LE PART NUMBER	DESCRIPTION	QTY
1	242241-001	CRUMB TAKEOUT CONVEYOR	1
2	242242-001	CRUMB PROTECTION GUARD	1
3	280512-001	DRAG CHAIN ASSEMBLY W/FLIGHTS	1
4	302682-002	TAKE-UP ADJ BOLT 0.5-13 X 4	2
5	307299-001	RULON IDLE BUSHING	4
6	308493-001	MACHINED HEX CAP SCREW	1
7	313456-002	FILTER DISCHARGE DRIVE SHAFT	1
8	313457-002	FILTER DRAG IDLE SHAFT 0CF24	1
9	320203-001	DISCHARGE BEARING HOUSING	2
10	406016-001	DRAG CONV SCREEN TOP 0CF3618	1
11	406017-001	DRAG CONV SCREEN BOTTOM	1
12	406018-001	DRAG CONV SCREEN MIDDLE	1
13	406102-001	CHUTE	1
14	415051-001	REACTION ARM FRYER CONVEYOR	1
15	415231-001	BRACKET BEARING TAKE-UP 0CF24	2
16	FA408002	SHLDR SCREW, SS, 0.31DIA x 0.50 LG	2
17	FA460011	HEX NUT,REG,SS, 0.38-16	4
18	GM104-03	GEARMOTOR 0.125HP 480 1 RATIO	1
19	SA010-04	LOCK COLLAR SS 0.750	1
20	SP40B1212-S	SPRKT 304SS 40B12 X 0.75 BORE	2
21	SP40B1216-S	SPRKT 40B12 X 1.00 BORE 304SS	2

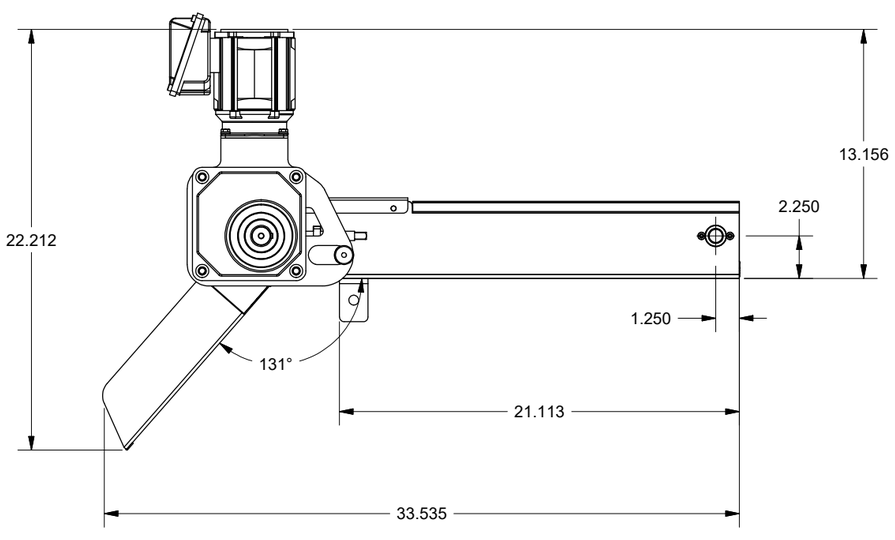

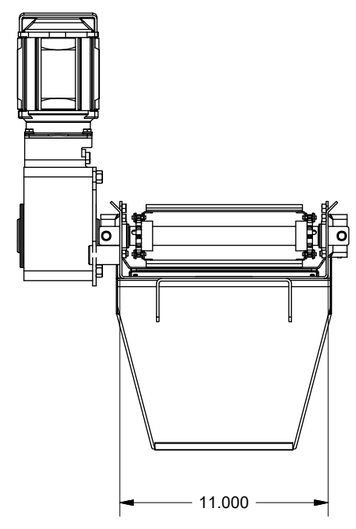

NO	REVISION	BY	DATE	BY	DATE
c)	UPDATE BOM, ADD FA460011	HNA	06/03/22		
b)	ADD PIN#308493-001	YZ	08/02/19		
a)	RELEASE TO PRODUCTION	YZ	03/25/19		

REMOVE ALL BURRS AND BREAK ALL SHARP EDGES
TOLERANCES EXCEPT AS NOTED
DECIMALS .XX ± .01
.XXX ± .005
ANGLES ± 1/2°

THIS DRAWING IS OF A CONFIDENTIAL NATURE AND IS THE EXCLUSIVE PROPERTY OF LAWRENCE EQUIPMENT. IT MAY NOT BE REPRODUCED, USED OR DISCLOSED WITHOUT PRIOR WRITTEN PERMISSION OF THE OWNER.

LAWRENCE EQUIPMENT
2034 NORTH PECK ROAD
SO. EL MONTE, CALIFORNIA 91733
(626) 442-2894 TELEX 704116
TOLL FREE (800) 423-4500

CRUMB CONVEYOR ASSEMBLY
0SM1500

DRAWN BY: yzhang	DATE: 3/25/2019	SCALE:	
CHECKED BY	DATE	DRAWING NO. 505931	REV c)
APPROVED BY	DATE		SHEET 1 of 2

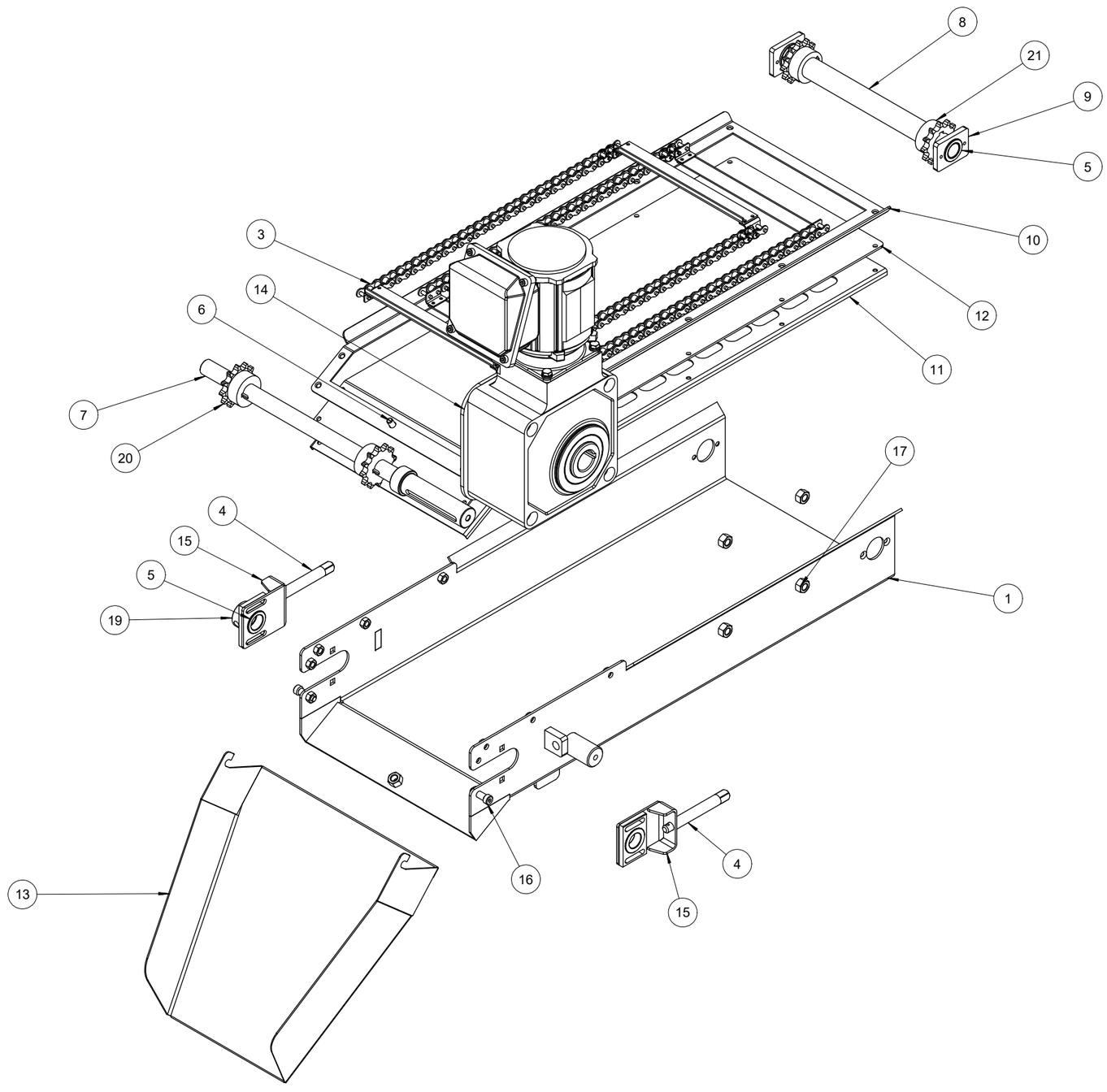

MATERIALS LIST

ITEM	LE PART NUMBER	DESCRIPTION	QTY
1	242241-001	CRUMB TAKEOUT CONVEYOR	1
2	242242-001	CRUMB PROTECTION GUARD	1
3	280512-001	DRAG CHAIN ASSEMBLY W/FLIGHTS	1
4	302682-002	TAKE-UP ADJ BOLT 0.5-13 X 4	2
5	307299-001	RULON IDLE BUSHING	4
6	308493-001	MACHINED HEX CAP SCREW	1
7	313456-002	FILTER DISCHARGE DRIVE SHAFT	1
8	313457-002	FILTER DRAG IDLE SHAFT 0CF24	1
9	320203-001	DISCHARGE BEARING HOUSING	2
10	406016-001	DRAG CONV SCREEN TOP 0CF3618	1
11	406017-001	DRAG CONV SCREEN BOTTOM	1
12	406018-001	DRAG CONV SCREEN MIDDLE	1
13	406102-001	CHUTE	1
14	415051-001	REACTION ARM FRYER CONVEYOR	1
15	415231-001	BRACKET BEARING TAKE-UP 0CF24	2
16	FA408002	SHLDR SCREW, SS, 0.31DIA x 0.50 LG	2
17	FA460011	HEX NUT,REG,SS, 0.38-16	4
18	GM104-03	GEARMOTOR 0.125HP 480 1 RATIO	1
19	SA010-04	LOCK COLLAR SS 0.750	1
20	SP40B1212-S	SPRKT 304SS 40B12 X 0.75 BORE	2
21	SP40B1216-S	SPRKT 40B12 X 1.00 BORE 304SS	2

REMOVE ALL BURRS AND BREAK ALL SHARP EDGES
TOLERANCES EXCEPT AS NOTED
DECIMALS .XX ± .01
.XXX ± .005
ANGLES ± 1/2°

THIS DRAWING IS OF A CONFIDENTIAL NATURE AND IS THE EXCLUSIVE PROPERTY OF LAWRENCE EQUIPMENT, AND MAY NOT BE REPRODUCED, USED OR DISCLOSED WITHOUT PRIOR WRITTEN PERMISSION OF THE OWNER.

LAWRENCE EQUIPMENT
2034 NORTH PECK ROAD
SO. EL MONTE, CALIFORNIA 91733
(626) 442-2894 TELEX 704116
TOLL FREE (800) 423-4500

CRUMB CONVEYOR ASSEMBLY
0SM1500

DRAWN BY yzhang	DATE 3/25/2019	SCALE:		
CHECKED BY	DATE	DRAWING NO. 505931	REV c)	SHEET 2 of 2
APPROVED BY	DATE			

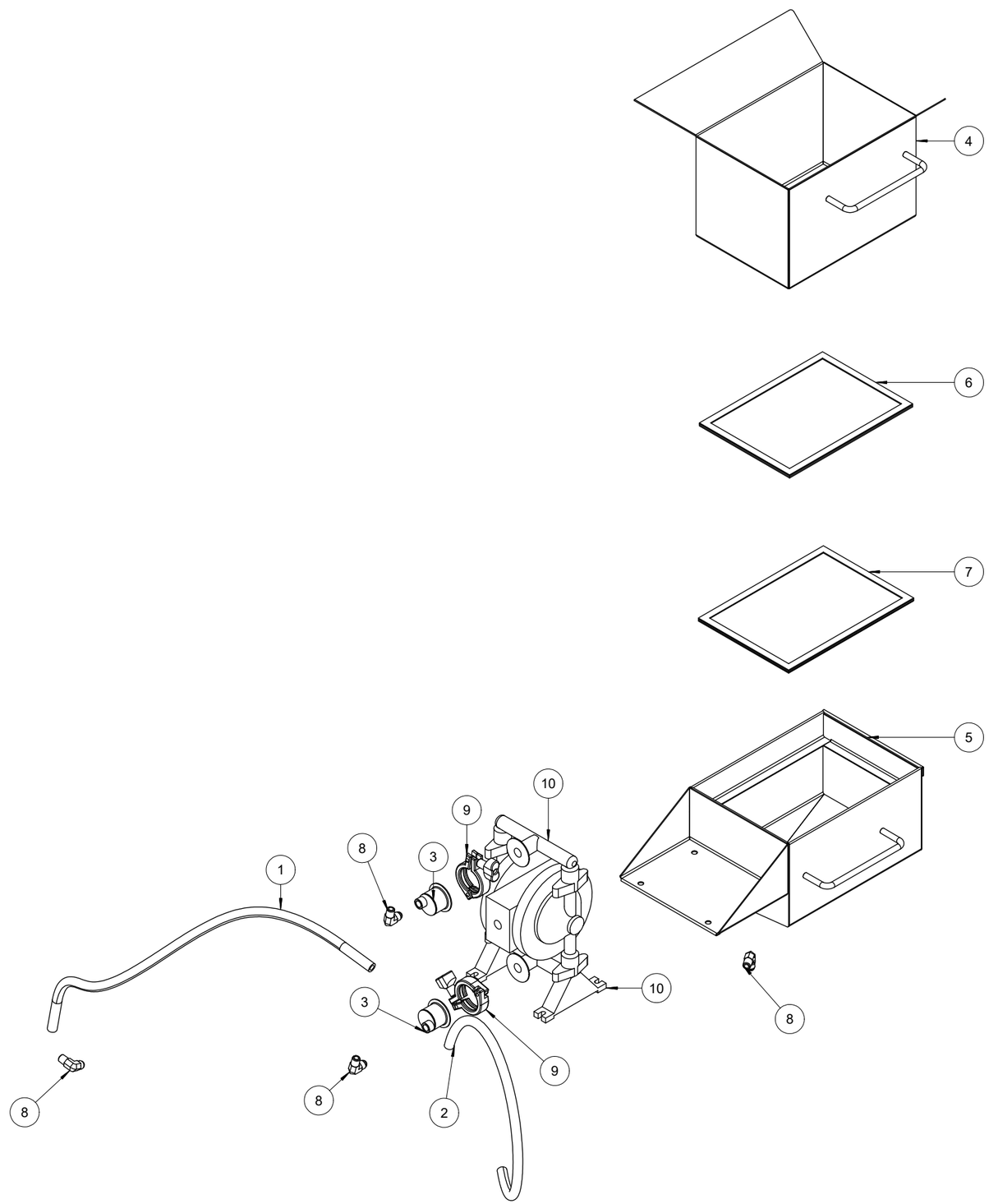

MATERIALS LIST

ITEM	LE PART NUMBER	DESCRIPTION	QTY
1	280581-001	AIR HOSE/TUBING .38ID X .62OD	1
2	280581-002	AIR HOSE/TUBING .38ID X .62OD	1
3	380440-001	ADAPT SF1.5 TO 0.25NPT	2
4	406020-001	OIL STRAINER 8.5 X 11.50	1
5	406141-001	OIL TANK EXTERNAL ASSY	1
6	407207-002	SCREEN FOR FRYER 11.1875X8.187	1
7	407207-003	SCREEN FOR FRYER 11.353X8.205	1
8	HY030-74	STEP AP203	4
9	SF004-01	CLAMP 1.50 DIA 500 PSI MAX	2
10	SF012-39	DUAL DIAPHRAM 0.5NPT PUMP	1

NO	REVISION	BY	DATE	BY	DATE
e)	UPDATE TO BE SAME AS BOM	CMG	06/10/22		
d)	REPLACED 406019-001 W/ 406141-001	JSO	04/10/20		
c)	SF012-39 WAS HY011-28	CMG	06/14/19		
b)	UPDATE THE MATERIAL LIST	YZ	02/23/18		
a)	RELEASE TO PRODUCTION	HGM	10/6/17		

REMOVE ALL BURRS AND BREAK ALL SHARP EDGES
TOLERANCES EXCEPT AS NOTED
DECIMALS .XX ± .01
.XXX ± .005
ANGLES ± 1/2°

THIS DRAWING IS OF A CONFIDENTIAL NATURE AND IS THE EXCLUSIVE PROPERTY OF LAWRENCE EQUIPMENT, AND MAY NOT BE REPRODUCED, USED, OR DISCLOSED WITHOUT PRIOR WRITTEN PERMISSION OF THE OWNER.

LAWRENCE EQUIPMENT
2034 NORTH PECK ROAD
SO. EL MONTE, CALIFORNIA 91733
(626) 442-2894 TELEX 704116
TOLL FREE (800) 423-4500

OIL FILTER PUMP ASSY
0SM1500

DRAWN BY hmedrano	DATE 10/6/2017	SCALE: None	
CHECKED BY	DATE	DRAWING NO. 809469	REV D / SHEET 1 of 1
APPROVED BY	DATE		

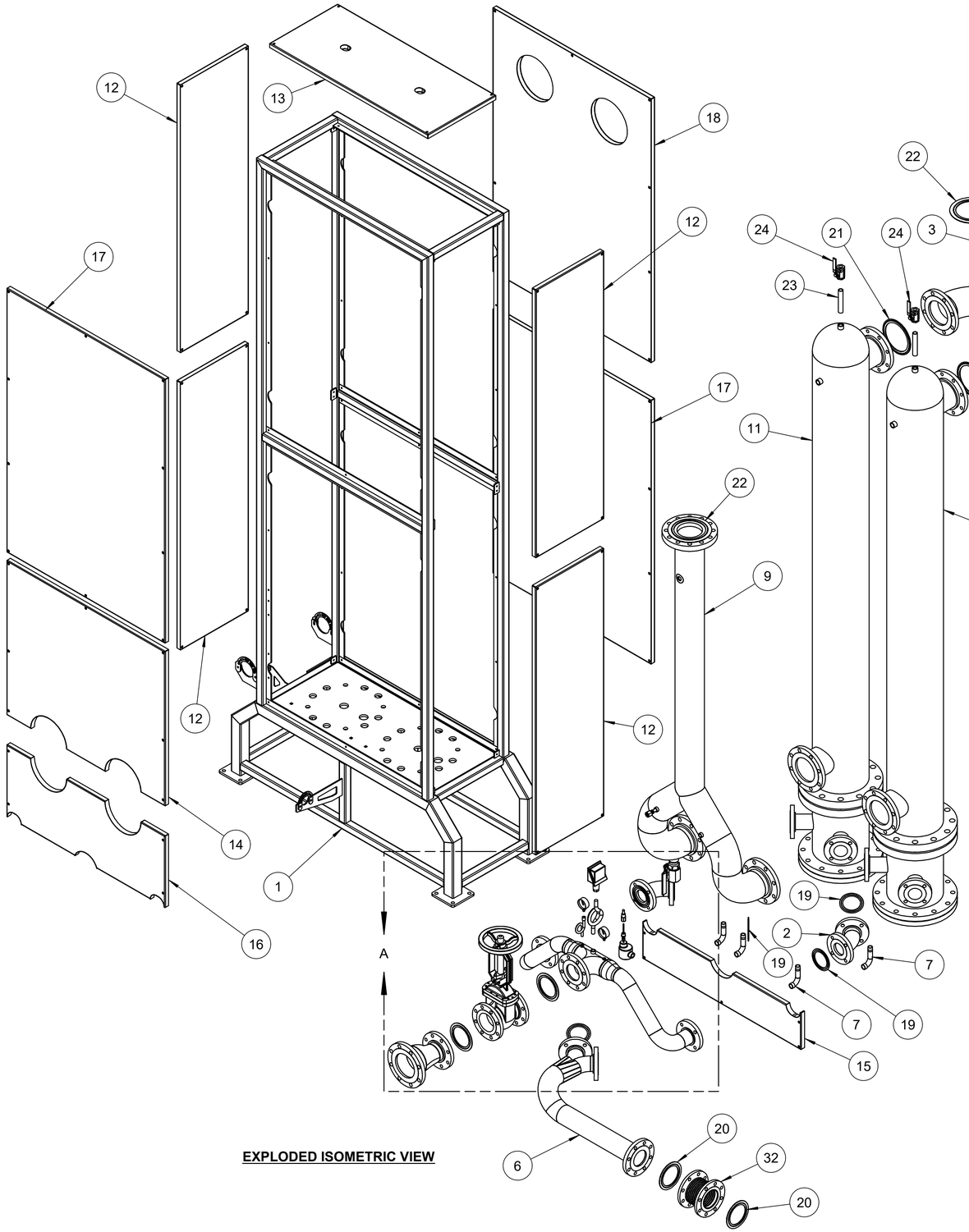

EXPLODED ISOMETRIC VIEW

MATERIALS LIST			
ITEM	LE PART NUMBER	DESCRIPTION	QTY
31	MH032-08	THERMOWELL 1/2 NPT SS	1
32	MH024-13	BELLOWS EXP. JOINT 4"X6" LG	1
33	PF1091216	NPPLE BLK 1.50X 2.00 LONG	1
34	VA002-42	VALVE 1.5NPT CARBON STEEL	1

MATERIALS LIST			
ITEM	LE PART NUMBER	DESCRIPTION	QTY
1	242756-001	HEAT EXCHANGER FRAME	1
2	280132-001	HEAT EXCHANGER ADAPTER 3	2
3	EL020-72	DIFF PRESSURE SWITCH ADJ	1
4	280703-001	FRYER INLET ADAPTER PIPE	1
5	280704-001	FRYER OIL INFEED ELBOW	1
6	280705-001	HEAT EXCHANGER INFEED ADAPTER	1
7	280709-001	DRAINING PIPE HEAT EXCHANGER	4
8	EL020-70	THERMOCOUPLE ADJ PROBE 3/16	1
9	280711-001	HEAT EXCHANGER OUTLET PIPE 0CF	1
10	280712-001	HEAT EXCHANGER INLET PIPE	1
11	380425-001	MODIFIED HEAT EXCHANGER	2
12	424087-001	HEAT EXCHANGER SIDE INSUL 0CF3	4
13	425214-001	CLEANING GUARD	1
14	425215-001	HEAT EXCHANGER SIDE INSUL 0CF	1
15	425216-001	HEAT EXCHANGER SIDE INSUL 0CF	1
16	425217-001	HEAT EXCHANGER SIDE INSUL 0CF	1
17	425218-001	HEAT EXCHANGER SIDE INSUL 0CF	2
18	425219-001	HEAT EXCHANGER SIDE INSUL 0CF	1
19	MH040-31	GASKET 150LB FLANGE 3.00	6
20	MH040-33	GASKET 150LB FLANGE 4.00 REINF	4
21	MH040-34	GASKET 150LB FLANGE 6.00 REINF	4
22	MH040-43	GASKET 3000LB FLANGE 6.00	2
23	PF4090648	NIPPLE SS .75 X 6.0 LG	2
24	VA002-48	VALVE 0.75NPT CARBON STEEL	2
25	VA002-64	GATE VALVE HIGH TEMP 4.0	1
26	MH032-02	COUPLING S-FLEX FLANGE TP 9SC	1
27	MH041-10	GAUGE PROTECTING STEAM 1/4	1
28	HY005-22	GAUGE 30PSI S/S W GLYCERIN	1
29	MH041-09	GAUGE PROTECTING STEAM 1/2	1
30	EL020-56	PRESSURE SWITCH HIGH TEMP 1-20	1

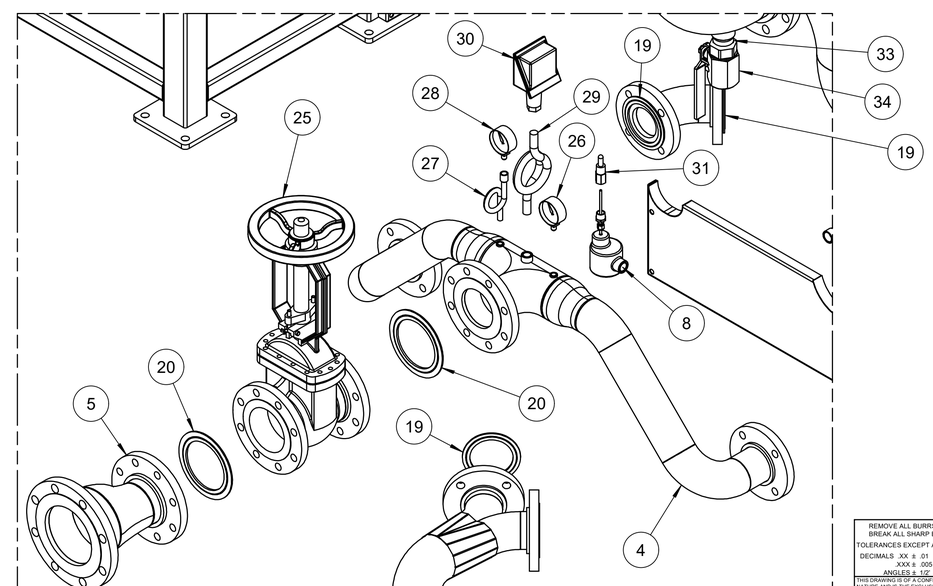

DETAIL A

REMOVE ALL BURRS AND BREAK ALL SHARP EDGES

TOLERANCES EXCEPT AS NOTED
DECIMALS .XX ± .01
.XXX ± .005
ANGLES ± 1/2°

THIS DRAWING IS OF A CONFIDENTIAL NATURE AND IS THE EXCLUSIVE PROPERTY OF LAWRENCE EQUIPMENT, AND MAY NOT BE REPRODUCED, USED OR DISCLOSED WITHOUT PRIOR WRITTEN PERMISSION OF THE OWNER.

LAWRENCE EQUIPMENT
2034 NORTH PECK ROAD
SO. EL MONTE, CALIFORNIA 91733
(626) 442-2894 TELEX 704116
TOLL FREE (800) 423-4500

HEAT EXCHANGER ASSY 3000LBS
0SM3000-02

DRAWN BY OSCAR MARROQUIN	DATE 8/20/2024	SCALE:	
CHECKED BY	DATE	DRAWING NO. 8090140	REV A / SHEET 1 of 1
APPROVED BY	DATE		

NO	REVISION	BY	DATE	BY	DATE
A	RELEASE TO PRODUCTION	OKM	08/20/24		

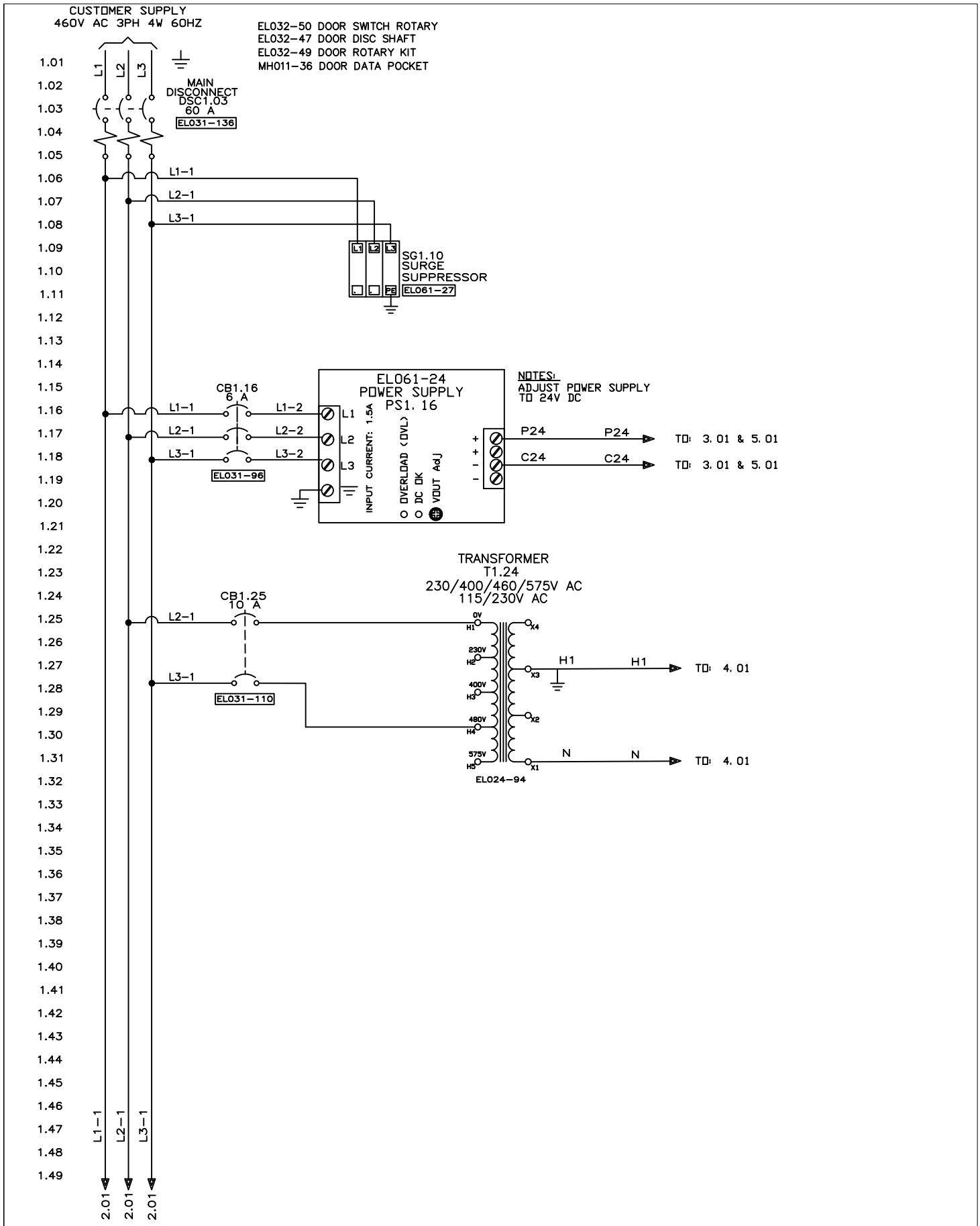

d)				DRAWN BY BP/AL	DATE 6/20/24
c)				CHECKED BY	DATE
b)				APPROVED BY	DATE
a)				ISSUED BY	DATE
NO	DESCRIPTION	BY	DATE		
REVISIONS				APPROVALS	

LAWRENCE EQUIPMENT
2034 NORTH PECK ROAD
SO. EL MONTE, CALIFORNIA 91833
(626) 442-2894 TELEX 704116
TOLL FREE (800) 423-4500

HEATER FRYER LO NOX
0HE3000-02
POWER & CONTROL ENCLOSURE WIRING

DRAWING NO. 0HE022
REV
SHEET 1 of 11

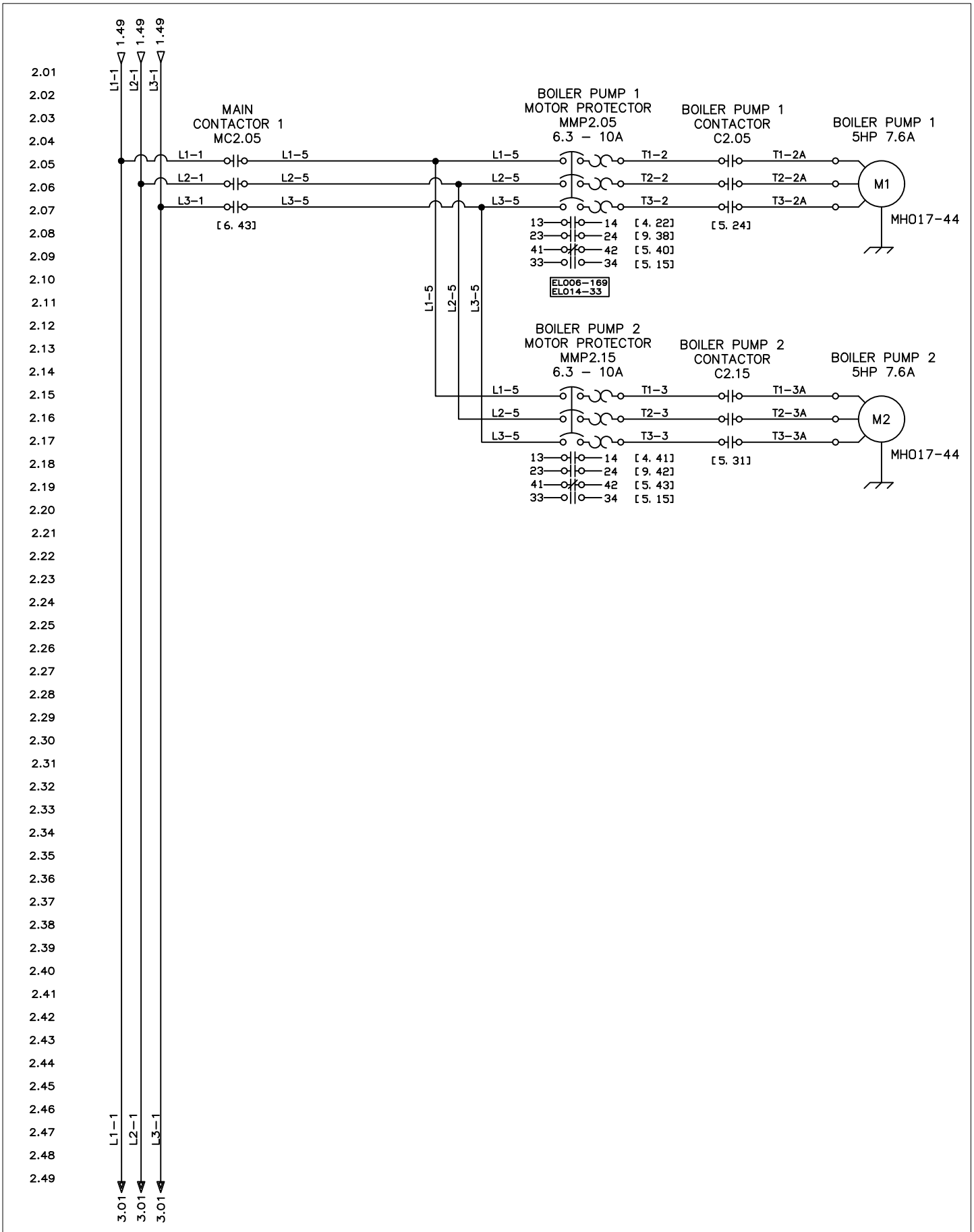

NO	DESCRIPTION	BY	DATE
d)			
c)			
b)			
a)			

REVISIONS

DRAWN BY	BP/AL	DATE 6/20/24
CHECKED BY		DATE
APPROVED BY		DATE
ISSUED BY		DATE

APPROVALS

LAWRENCE EQUIPMENT
2034 NORTH PECK ROAD
SO. EL MONTE, CALIFORNIA 91833
(626) 442-2894 TELEX 704116
TOLL FREE (800) 423-4500

HEATER FRYER LO NOX
OHE3000-02
POWER & CONTROL ENCLOSURE WIRING

DRAWING NO. OHE022
REV
SHEET 2 of 11

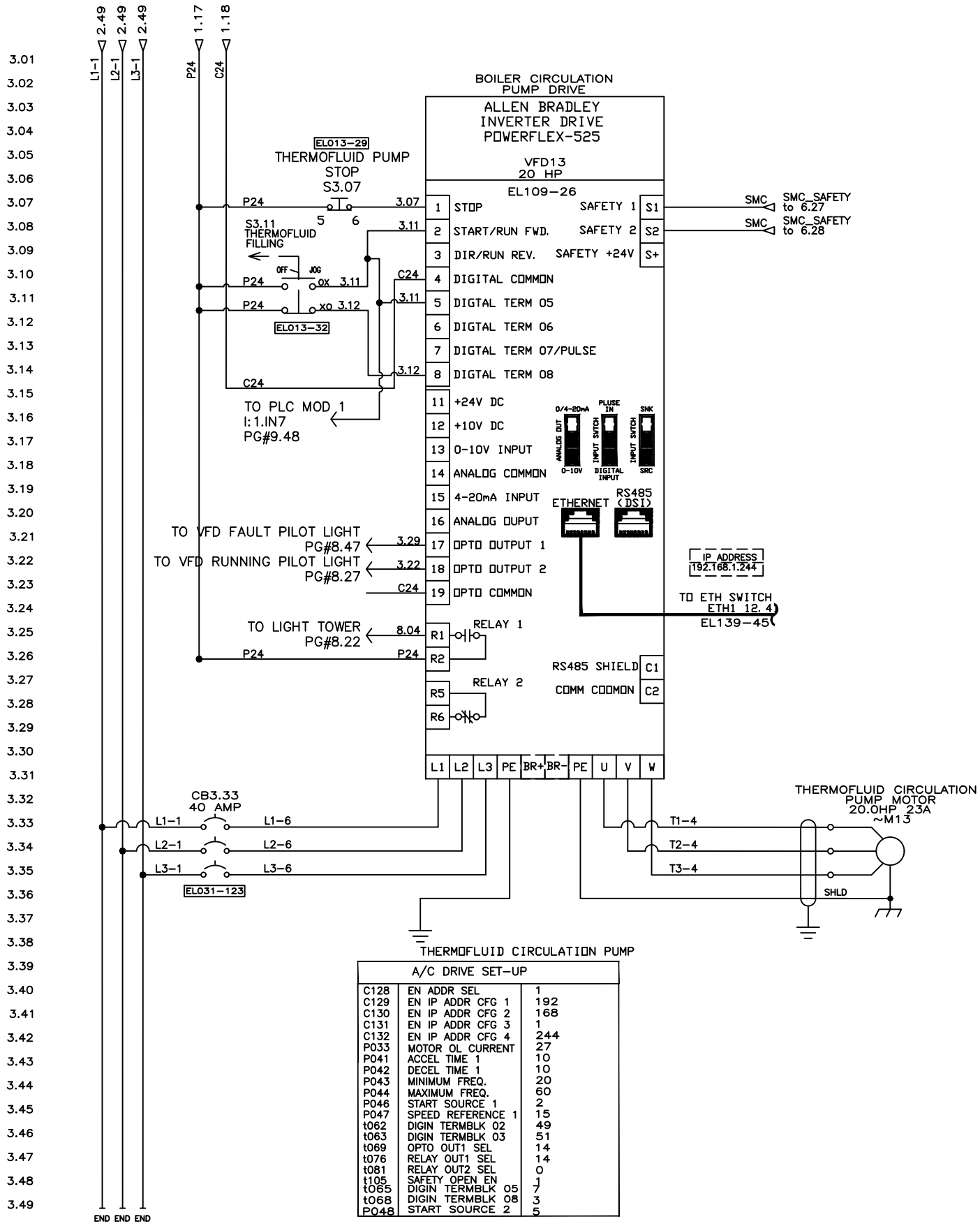

THERMOFLUID CIRCULATION PUMP

A/C DRIVE SET-UP		
C128	EN ADDR SEL	1
C129	EN IP ADDR CFG 1	192
C130	EN IP ADDR CFG 2	168
C131	EN IP ADDR CFG 3	1
C132	EN IP ADDR CFG 4	244
P033	MOTOR OL CURRENT	27
P041	ACCEL TIME 1	10
P042	DECEL TIME 1	10
P043	MINIMUM FREQ.	20
P044	MAXIMUM FREQ.	60
P046	START SOURCE 1	2
P047	SPEED REFERENCE 1	15
t062	DIGIN TERMBLK 02	49
t063	DIGIN TERMBLK 03	51
t069	OPTO OUT1 SEL	14
t076	RELAY OUT1 SEL	14
t081	RELAY OUT2 SEL	0
t105	SAFETY OPEN EN	1
t065	DIGIN TERMBLK 05	7
t068	DIGIN TERMBLK 08	3
P048	START SOURCE 2	5

NO	DESCRIPTION	BY	DATE
d)			
c)			
b)			
a)			

REVISIONS

DRAWN BY BP/AL	DATE 6/20/24
CHECKED BY	DATE
APPROVED BY	DATE
ISSUED BY	DATE

APPROVALS

LAWRENCE EQUIPMENT
2034 NORTH PECK ROAD
SO. EL MONTE, CALIFORNIA 91833
(626) 442-2894 TELEX 704116
TOLL FREE (800) 423-4500

HEATER FRYER LO NOX
OHE3000-02
POWER & CONTROL ENCLOSURE WIRING

DRAWING NO. OHE022
REV
SHEET 3 of 11

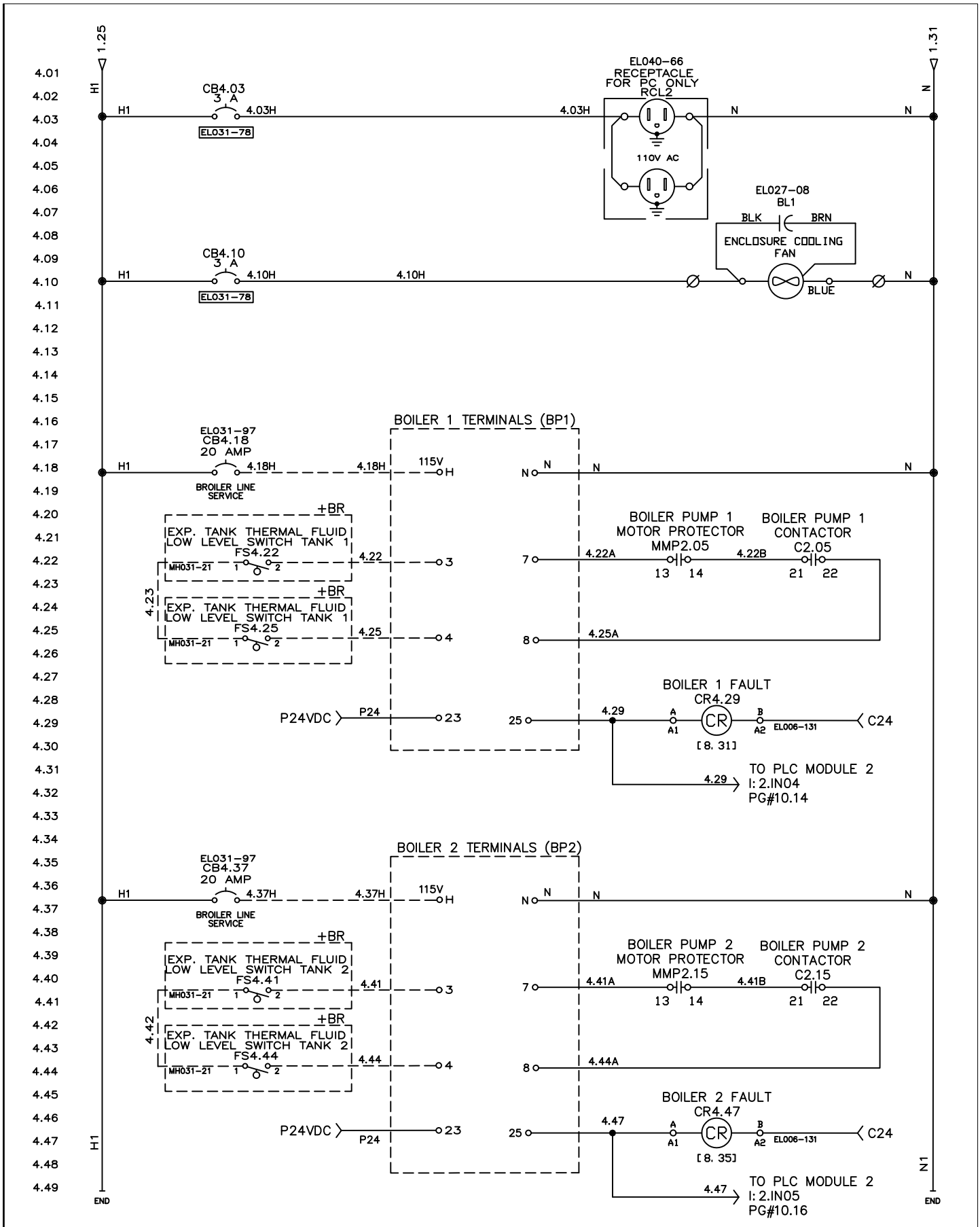

d)				DRAWN BY BP/AL	DATE 6/20/24
c)				CHECKED BY	DATE
b)				APPROVED BY	DATE
a)				ISSUED BY	DATE
NO	DESCRIPTION	BY	DATE		
REVISIONS				APPROVALS	

LAWRENCE EQUIPMENT

2034 NORTH PECK ROAD
SO. EL MONTE, CALIFORNIA 91833
(626) 442-2894 TELEX 704116
TOLL FREE (800) 423-4500

HEATER FRYER LO NOX
OHE3000-02
POWER & CONTROL ENCLOSURE WIRING

DRAWING NO. OHE022
REV
SHEET 4 of 11

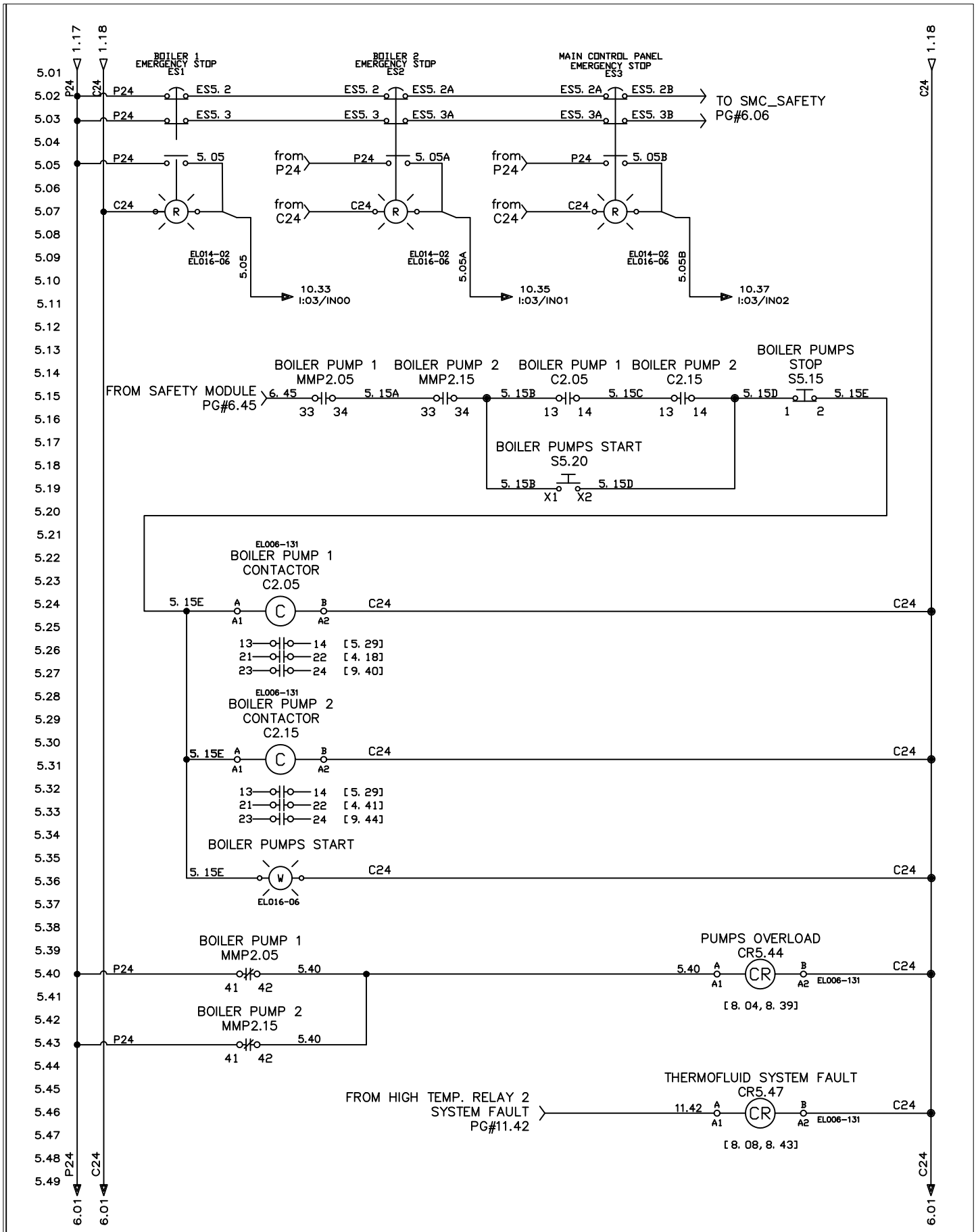

NO	DESCRIPTION	BY	DATE
d)			
c)			
b)			
a)			

REVISIONS

DRAWN BY	BP/AL	DATE	6/20/24
CHECKED BY		DATE	
APPROVED BY		DATE	
ISSUED BY		DATE	

APPROVALS

LAWRENCE EQUIPMENT

2034 NORTH PECK ROAD
SO. EL MONTE, CALIFORNIA 91833
(626) 442-2894 TELEX 704116
TOLL FREE (800) 423-4500

HEATER FRYER LO NOX
OHE3000-02
POWER & CONTROL ENCLOSURE WIRING

DRAWING NO. OHE022 REV

SHEET 5 of 11

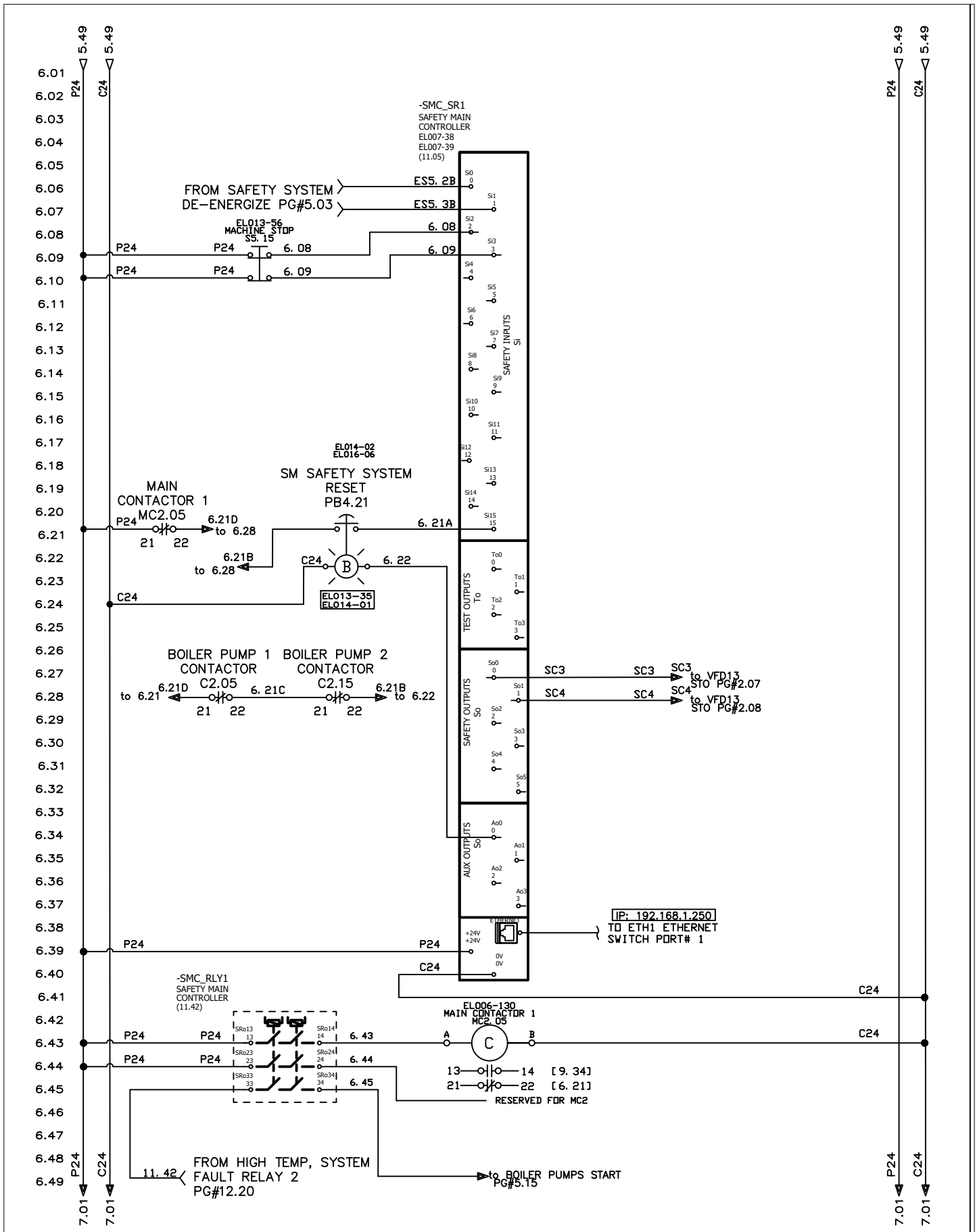

d)			
c)			
b)			
a)			
NO	DESCRIPTION	BY	DATE

REVISIONS

DRAWN BY BP/AL	DATE 6/20/24
CHECKED BY	DATE
APPROVED BY	DATE
ISSUED BY	DATE

APPROVALS

LAWRENCE EQUIPMENT

2034 NORTH PECK ROAD
SO. EL MONTE, CALIFORNIA 91833
(626) 442-2894 TELEX 704116
TOLL FREE (800) 423-4500

HEATER FRYER LO NOX
OHE3000-02
POWER & CONTROL ENCLOSURE WIRING

DRAWING NO. OHE022
REV
SHEET 6 of 11

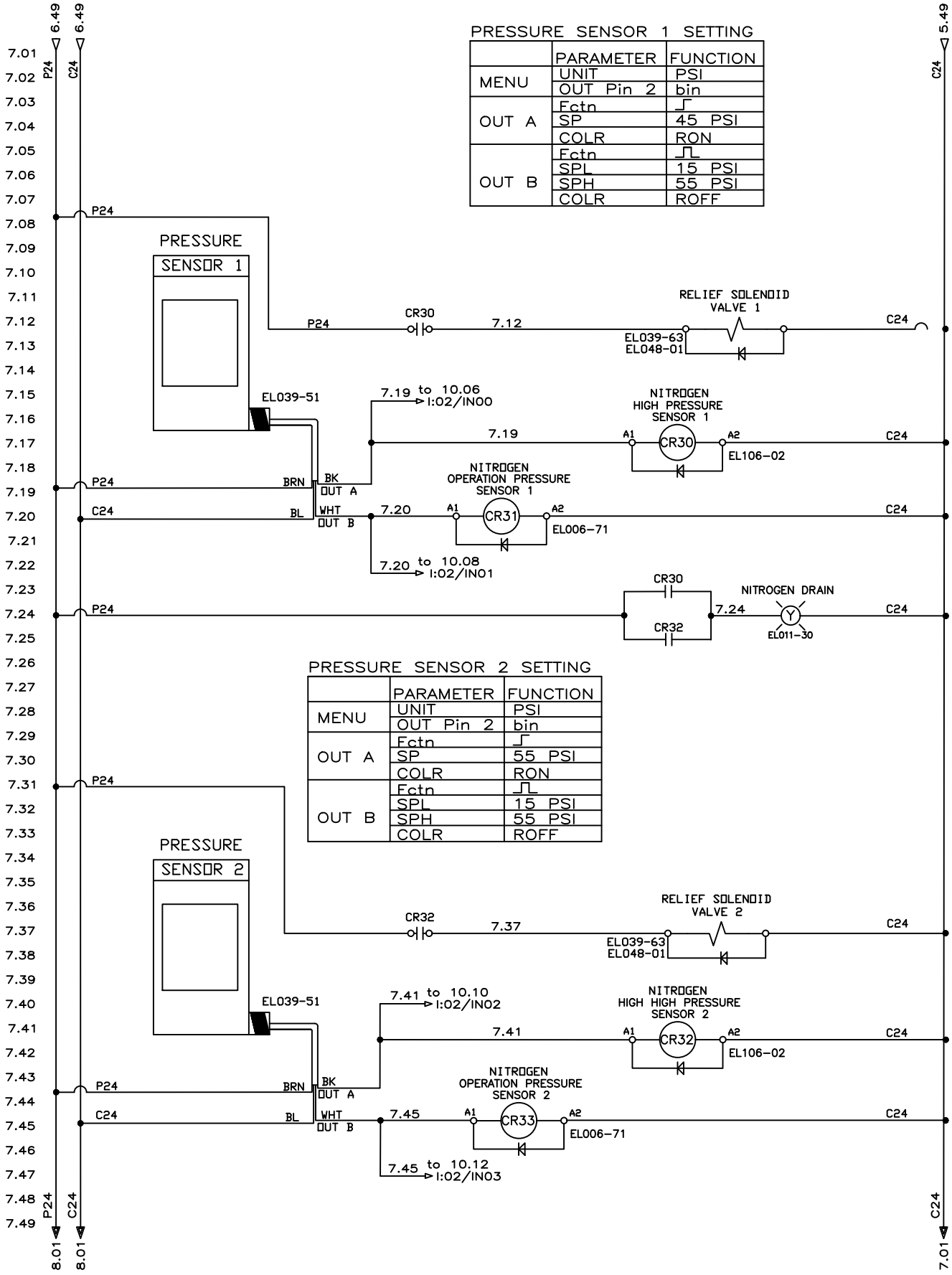

d)			
c)			
b)			
a)			
NO	DESCRIPTION	BY	DATE

REVISIONS

DRAWN BY BP/AL	DATE 6/20/24
CHECKED BY	DATE
APPROVED BY	DATE
ISSUED BY	DATE

APPROVALS

LAWRENCE EQUIPMENT
2034 NORTH PECK ROAD
SO. EL MONTE, CALIFORNIA 91833
(626) 442-2894 TELEX 704116
TOLL FREE (800) 423-4500

HEATER FRYER LO NOX
OHE3000-02
POWER & CONTROL ENCLOSURE WIRING

DRAWING NO. OHE022
REV
SHEET 7 of 11

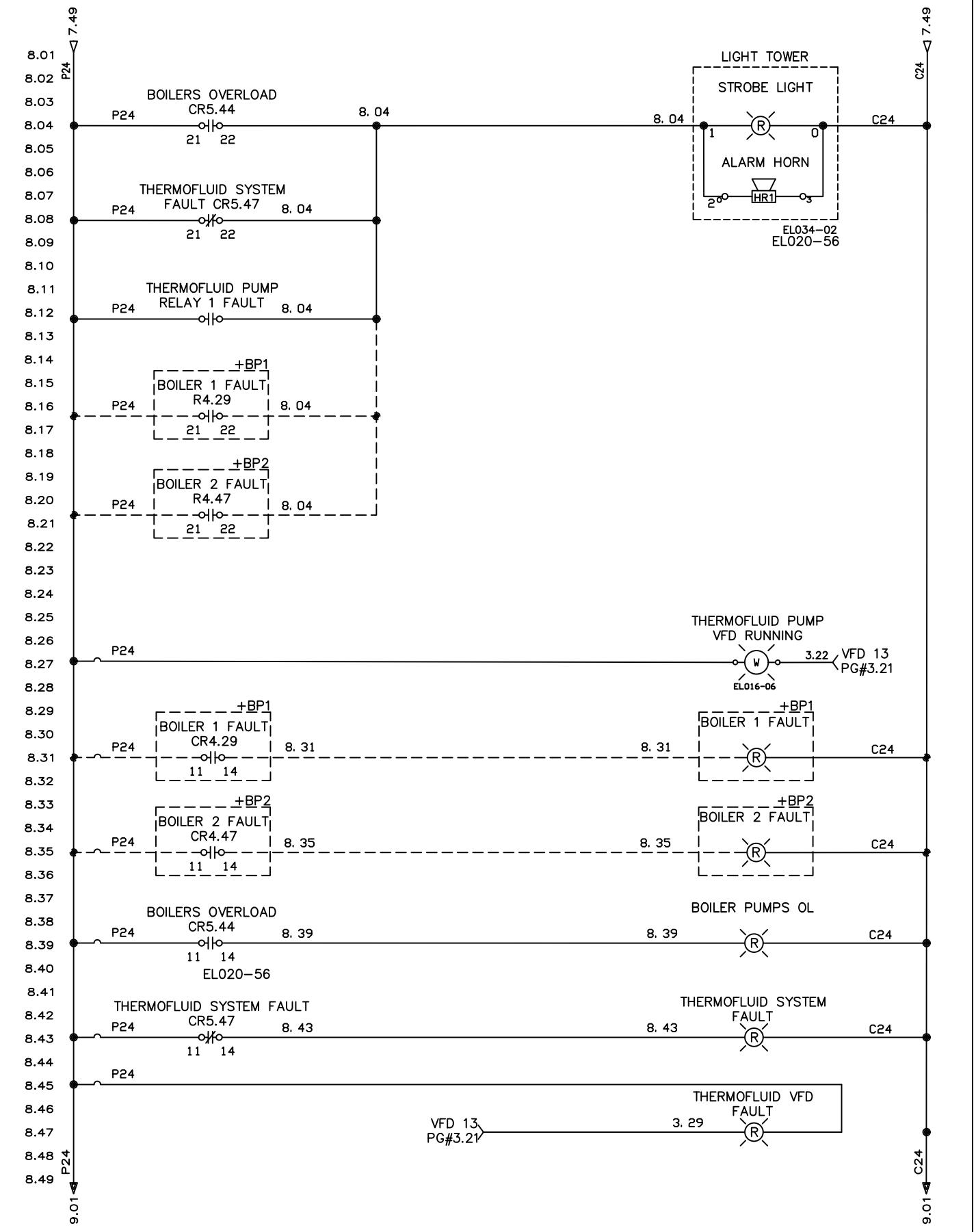

d)				DRAWN BY BP/AL	DATE 6/20/24
c)				CHECKED BY	DATE
b)				APPROVED BY	DATE
a)				ISSUED BY	DATE
NO	DESCRIPTION	BY	DATE		
REVISIONS				APPROVALS	

LAWRENCE EQUIPMENT

2034 NORTH PECK ROAD
SO. EL MONTE, CALIFORNIA 91833
(626) 442-2894 TELEX 704116
TOLL FREE (800) 423-4500

HEATER FRYER LO NOX
OHE3000-02
POWER & CONTROL ENCLOSURE WIRING

DRAWING NO. OHE022
REV
SHEET 8 of 11

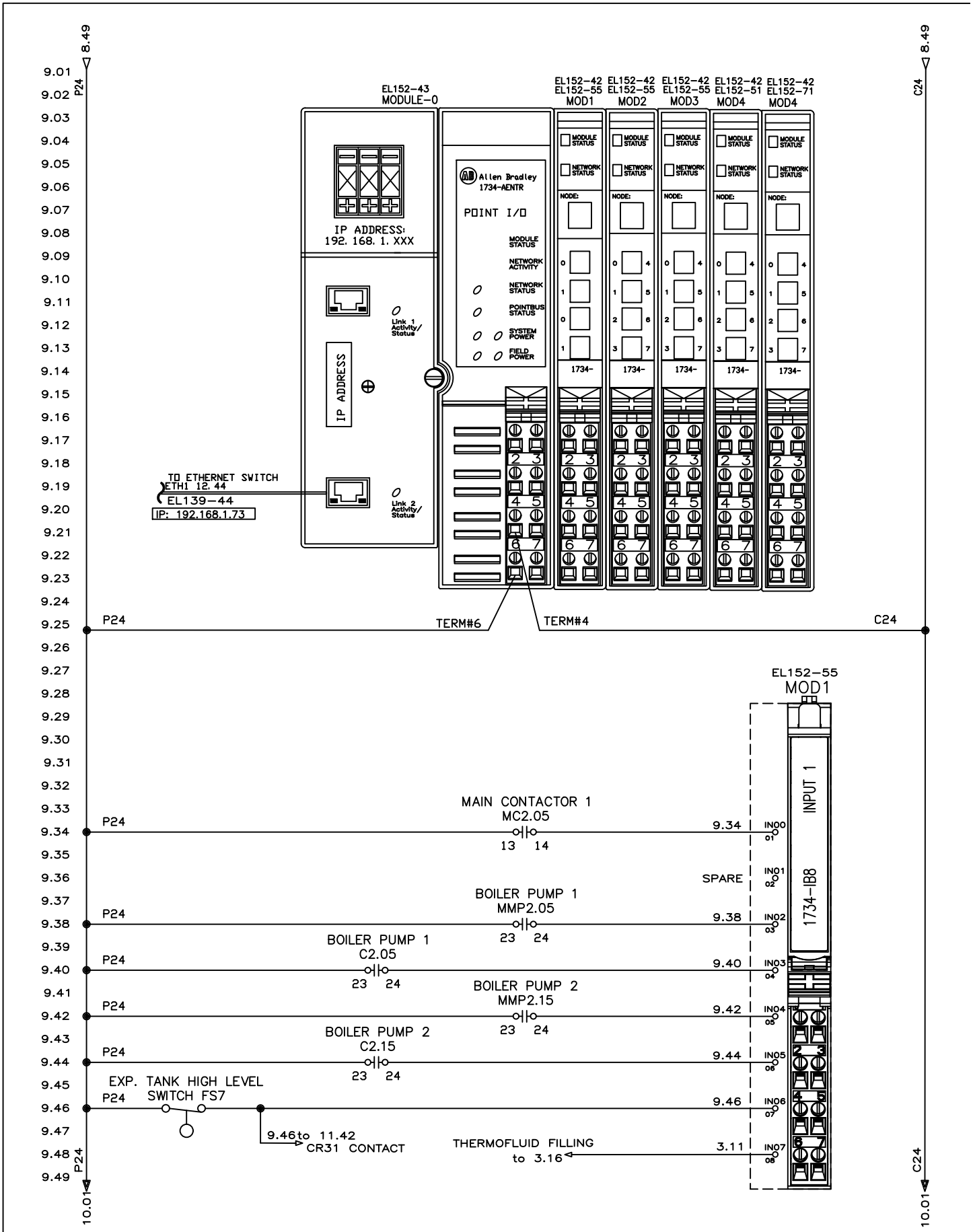

NO	DESCRIPTION	BY	DATE
d)			
c)			
b)			
a)			

REVISIONS

DRAWN BY BP/AL	DATE 6/20/24
CHECKED BY	DATE
APPROVED BY	DATE
ISSUED BY	DATE

APPROVALS

LAWRENCE EQUIPMENT

2034 NORTH PECK ROAD
SO. EL MONTE, CALIFORNIA 91833
(626) 442-2894 TELEX 704116
TOLL FREE (800) 423-4500

HEATER FRYER LO NOX
OHE3000-02
POWER & CONTROL ENCLOSURE WIRING

DRAWING NO. OHE022
REV
SHEET 9 of 11

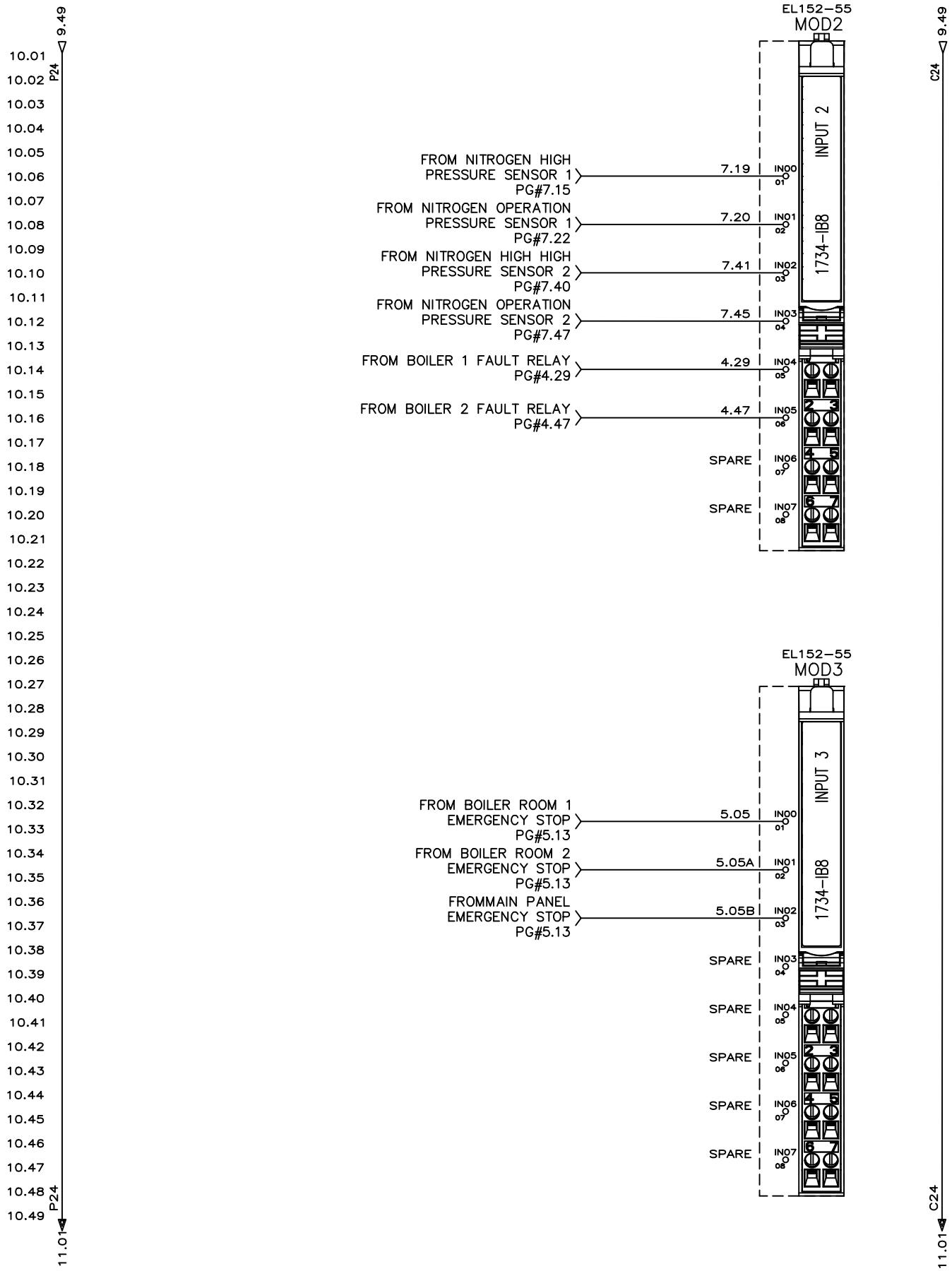

d)				DRAWN BY BP/AL	DATE 6/20/24
c)				CHECKED BY	DATE
b)				APPROVED BY	DATE
a)				ISSUED BY	DATE
NO	DESCRIPTION	BY	DATE		
REVISIONS				APPROVALS	

LAWRENCE EQUIPMENT

2034 NORTH PECK ROAD
SO. EL MONTE, CALIFORNIA 91833
(626) 442-2894 TELEX 704116
TOLL FREE (800) 423-4500

HEATER FRYER LO NOX
OHE3000-02
POWER & CONTROL ENCLOSURE WIRING

DRAWING NO. OHE022
REV
SHEET 10 of 11

Digital Display Settings	
ADV. SET	NO
IN TYPE	TEMP
SENSOR TYPE	TC
TC TYPE	TC J
DEC. POINT	111.1
UNIT	°F
RELAY 1	SET
SET POINT 1	195
HYST 1	5.0
ACT. 1	INCR
ERR. 1	ACTIV
ON DELAY 1	0
OFF DELAY 1	0
RELAY 2	SET
SET POINT 2	195
HYST 2	5.0
ACT. 2	INCR
ERR. 2	ACTIV
ON DELAY 2	0
OFF DELAY 2	0
ANALOG OUT	4–20
OUT LOW	0
OUT HI	700
OUT ERROR	23mA

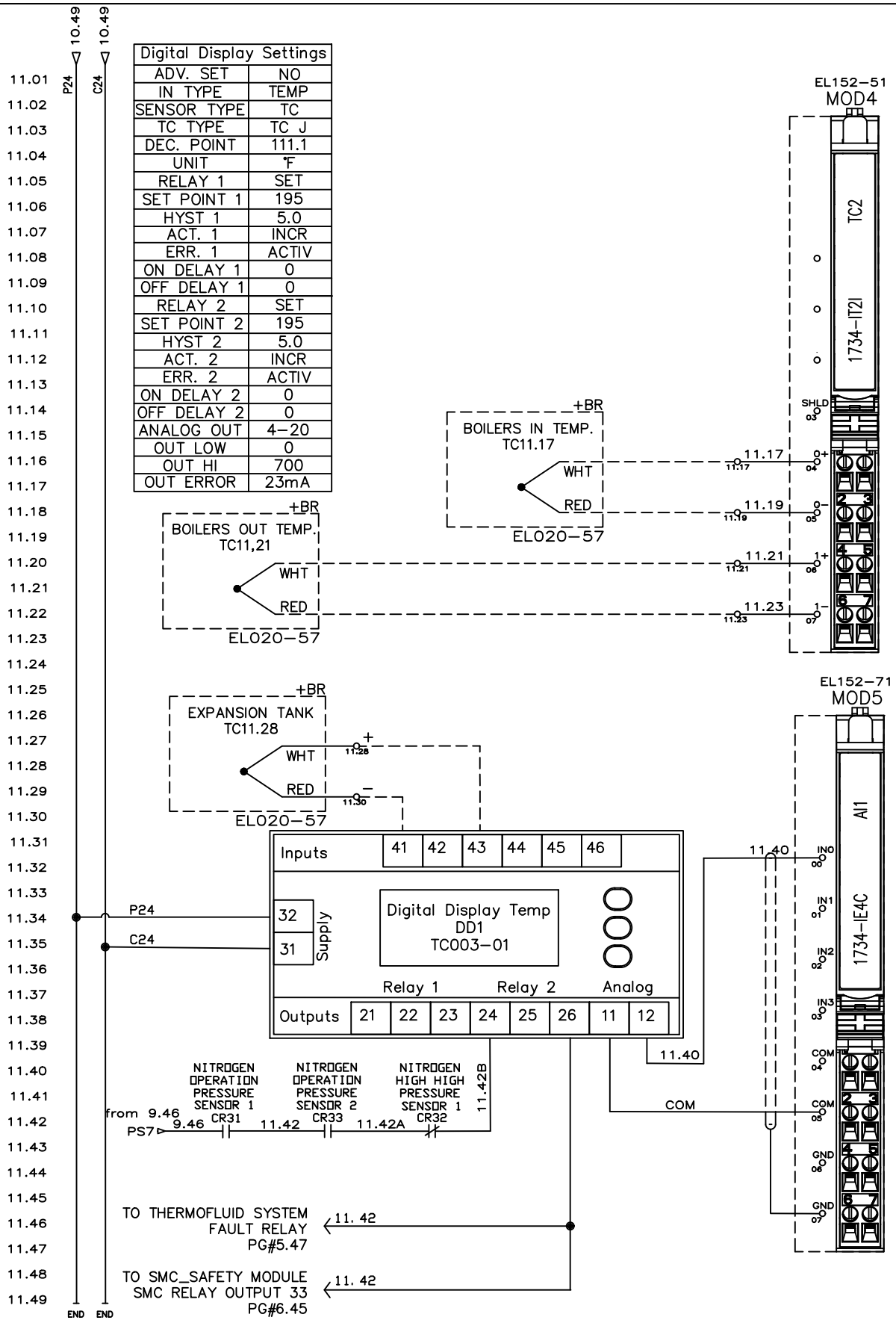

NO	DESCRIPTION	BY	DATE
d)			
c)			
b)			
a)			

REVISIONS

DRAWN BY BP/AL	DATE 6/20/24
CHECKED BY	DATE
APPROVED BY	DATE
ISSUED BY	DATE

APPROVALS

LAWRENCE EQUIPMENT

2034 NORTH PECK ROAD
SO. EL MONTE, CALIFORNIA 91833
(626) 442–2894 TELEX 704116
TOLL FREE (800) 423–4500

HEATER FRYER LO NOX
OHE3000–02
POWER & CONTROL ENCLOSURE WIRING

DRAWING NO. OHE022
REV
SHEET 11 of 11

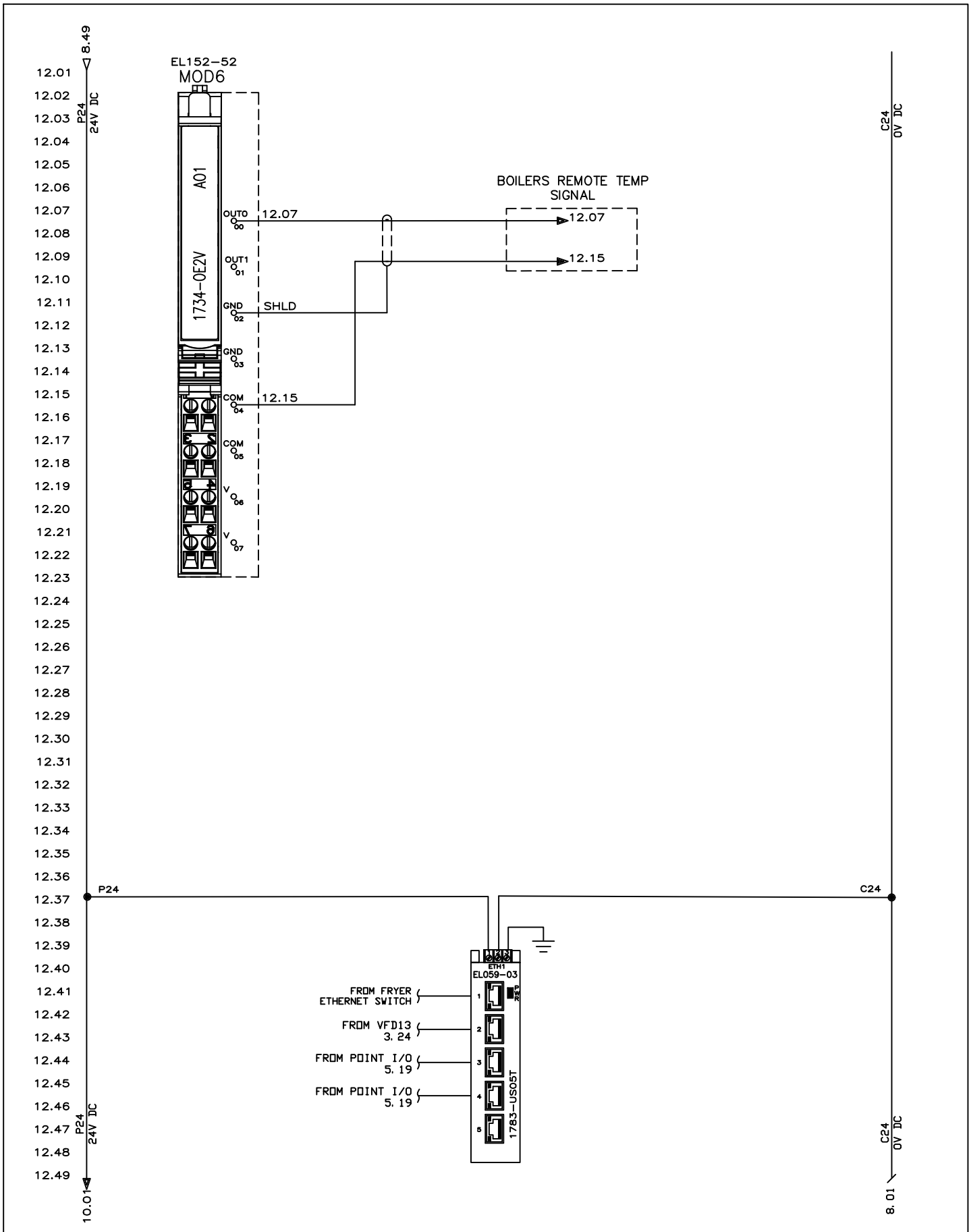

NO	DESCRIPTION	BY	DATE
d)			
c)			
b)			
a)			

REVISIONS

DRAWN BY BP/AL	DATE 6/20/24
CHECKED BY	DATE
APPROVED BY	DATE
ISSUED BY	DATE

APPROVALS

LAWRENCE EQUIPMENT
2034 NORTH PECK ROAD
SO. EL MONTE, CALIFORNIA 91833
(626) 442-2894 TELEX 704116
TOLL FREE (800) 423-4500

HEATER FRYER LO NOX
OHE3000-02
POWER & CONTROL ENCLOSURE WIRING

DRAWING NO. OHE022
REV
SHEET 11 of 11

MATERIALS LIST

ITEM	LE PART NUMBER	DESCRIPTION	QTY
1	EH999-18	BASE FLANGE FOR 3 CONTACTS	2
2	EL006-169	MANUAL MTR STARTER 6.30-10.00	2
3	EL006-97	CONTACTOR 9AMP 24VDC COIL 460V	2
4	EL006-151	CONTACTOR 23 AMP 24 VDC COIL	2
5	EL007-38	SAFTEY MAIN CONTROLLER STD	1
6	EL007-39	SAFETY RELAY OUTPUT UNIT	1
7	EL012-11	SELECTOR SWITCH 2POS KNOB	2
8	EL013-31	PUSH BOTTON FLUSH GREEN 22.5MM	1
9	EL013-34	PUSH BUTTON ILLUM MUSHROOM RED	3
10	EL014-01	CONTACT BLOCK N.O.	7
11	EL014-02	CONTACT BLOCK N.C.	6
12	EL014-32	CONTACT BLOCKS AUX 1NO 1NC	2
13	EL014-67	CONTACT BLOCKS AUX 1NO 1NC	2
14	EL013-45	PUSH BUTTON EXTEND RED 22MM	1
15	EL016-06	LIGHT TERM W/BULB LATCH	5
16	EL024-94	TRANS 5.0KVA 400-460V/115 230V	1
17	EL027-08	CABINET COOLER 25 CUBIC FEET	1
18	EL031-63	CIRCUIT BREAKER 30AMP 480V	1
19	EL032-47	DOOR DISC OPERATING SHAFT	1
20	EL032-49	DOOR ROTARY OPERATOR KIT 140G	1
21	EL032-50	DOOR DISC SWTCH ROTARY W/GUIDE	1
22	EL040-66	RECEPTICAL DIN RAIL MOUNT 120V	1
23	EL047-46	TERMINAL BLK. POWER DISTR.	1
24	EL047-101	TERMINAL BLOCK COVER	1
25	EL061-26	POWER SUPPLY 380-480AC TO 24VD	1
26	EL061-27	SURGE SUPPRESSOR 550V 3PHASE	1
27	EL106-02	RELAY TYPE HC 4PL 4ND/NC 24VDC	1
28	EL107-01	RELAY SOCKET HC 4PL 10A 250V	1
29	EL109-26	ADJ FREQ DRV AB 20HP 528V 3	1
30	EL152-42	POINT I/O WIRING BASE ASSEMBLY	6
31	EL152-43	POINT I/O 2PORT ETHERNET/IP AD	1
32	EL152-51	POINT I/O ISOLATED THERMOCOUPL	2
33	EL152-52	POINT I/O 2 VOLTAGE ANALOG OUT	3
34	TC003-01	DIGITAL READOUT DISPLAY TEMP.	1
35	EL031-66	CIR.BREAKER 10AMP 3POLE AC C	1
36	EL031-69	CIR. BREAKER 6AMP 1POLE AC	1
37	EL031-136	CIRCUIT BREAKER 60 AMP 480V.	1
38	EL152-71	POINT I/O 4INPUT ANALOG 4-20MA(NOT SHOWN)	1

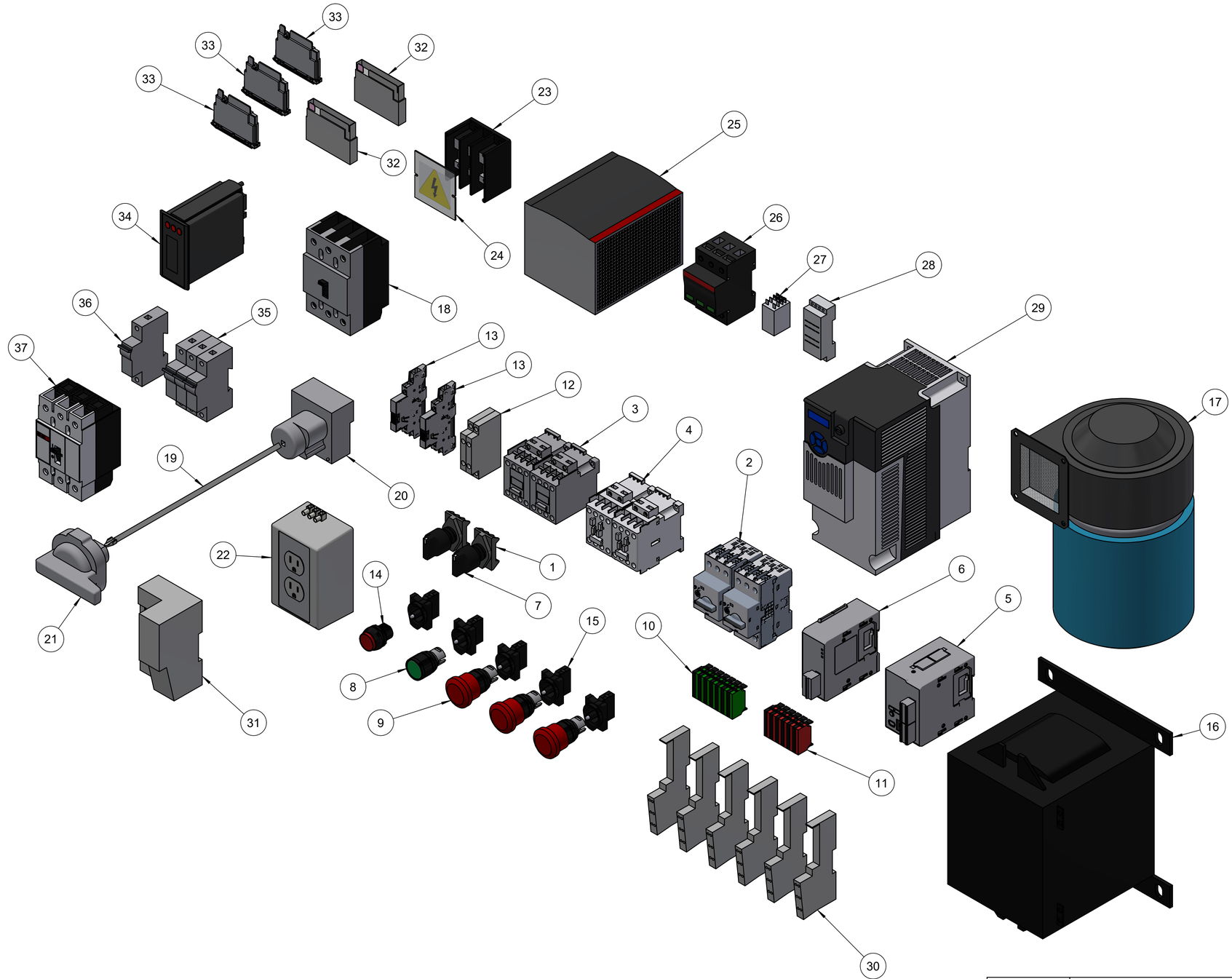

REMOVE ALL BURRS AND BREAK ALL SHARP EDGES
TOLERANCES EXCEPT AS NOTED
DECIMALS .XX ± .01
.XXX ± .005
ANGLES ± 1/2°

THIS DRAWING IS OF A CONFIDENTIAL NATURE AND IS THE EXCLUSIVE PROPERTY OF LAWRENCE EQUIPMENT, AND MAY NOT BE REPRODUCED, USED OR DISCLOSED WITHOUT PRIOR WRITTEN PERMISSION OF THE OWNER.

LAWRENCE EQUIPMENT
2034 NORTH PECK ROAD
SO. EL MONTE, CALIFORNIA 91733
(626) 442-2894 TELEX 704116
TOLL FREE (800) 423-4500

CNTRL HEAT EXCHANGE FRYR 460V
0HE3000-02

DRAWN BY OSCAR MARROQUIN	DATE 7/29/2024	SCALE:
CHECKED BY	DATE	DRAWING NO. 501667 / REV A / SHEET 1 of 1
APPROVED BY	DATE	

NO	REVISION	BY	DATE	BY	DATE
A	RELEASE TO PRODUCTION	OKM	07/29/24		

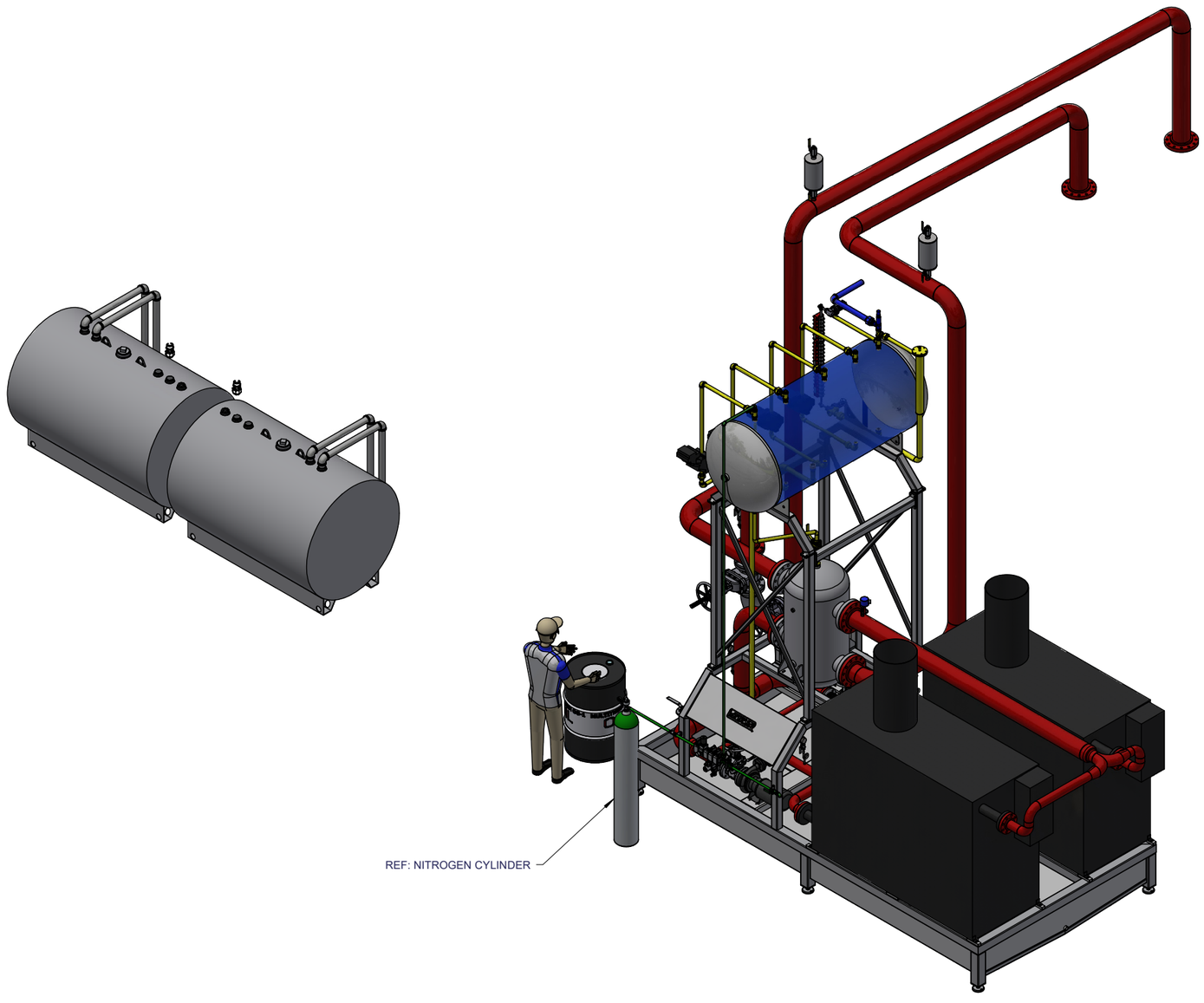

ISOMETRIC VIEW

MATERIALS LIST

ITEM	LE PART NUMBER	DESCRIPTION	QTY
60	PF11316	PLUG BLK 2.00 NPT	9
61	PI10840-13.875-TBE	PIPE BLK 1.00 SCHED 40 X 13.88 LG	1
62	PI10840-21.75-TBE	PIPE BLK 1.00 SCHED 40 X 21.75 LG	8
63	PI10840-30.500-TBE	PIPE BLK 1.00 SCHED 40 X 30.50 LG	4
64	PI11240-12.625-TBE	PIPE BLK 1.50 SCHED 40 X 12.63 LG	2
65	PI11240-14.00-TBE	PIPE BLK 1.50 SCHED 40 X 14.00 LG	2
66	PI11240-17.125-TBE	PIPE BLK 1.50 SCHED 40 X 17.13 LG	1
67	PI11240-17.5-TBE	PIPE BLK 1.50 SCHED 40 X 17.50 LG	1
68	PI11240-5.250-TBE	PIPE BLK 1.50 SCHED 40 X 5.25 LG	1
72	VA002-40	VALVE 1/4NPT CARBON STEEL	5
73	VA002-41	VALVE 1/2NPT CARBON STEEL	1
74	VA002-42	VALVE 1.5NPT CARBON STEEL	3
75	VA005-29	CHECK VALVE 0.5NPT 125PSI	1
76	VA013-03	SAFETY VALVE	1
77	VM054-04	THERMAL FLUID HTR 2.0M BTU	2
78	VM054-05	THERMAL FLUID EXP. TANK 379GAL	1
79	VM054-06	THERMAL FLUID DIST.TANK 92GAL	1
106	280148-001	AIR COLLECTING TANK 6IN	2
107	VA002-47	VALVE 1.0NPT CARBON STEEL	7
108	PF11308	PLUG BLK, 1.00	2
109	AP008-30	NITROGEN BLANKET COMBO ASSY	1
110	PF4090412	NIPPLE SS .50 X 1.5 LONG	2
111	PF41104	TEE SS 0.50	2
112	PI40440	PIPE SS .50 SCHED 40 X 22 in LG.	2
113	PF4010402	BUSHING SS .50 TO .25	1
115	VM054-10	THERMAL FLUID DRAIN TANK 500GA	2
116	PF1091624	NIPLE BLK Φ 2.00 x 3.00 LG.	4
117	PF10616	ELBOW BLK Φ 2.00 x 90º	8
118	PI11640	PIPE BLK 2.00 SCHED 40 X 28.000 in LG.	4
119	PF10316	COUPLING Φ 2.0	4
120	HY012-246	BREATHER VENT 2IN NPT	4
121	PF11332	PLUG BLK 4.00	2
122	PF4011612	BUSHING BLK. 2.00 x 1.500	2
123	SA001-83	COUPLING S-FLEX FLANGE TP 9SC	2
124	SA001-82	COUPLING S-FLEX SLEEVE TYPE 9H	1
125	SA001-127	COUPLING S-FLEX HUB 1.125 BORE	1
126	MH017-48	RA3146 3X4X8.5 HOT OIL PUMP	1
127	MH040-54	GASKET 300LB FLANGE 4.00 REINF	1
129	358796-001	PUMP BASE	1
131	MO120-05	MOTOR 20HP 3500RPM 3PH TEFC	1
132	280723-001	PUMP FEEDING ELBOW	1
133	MH024-15	BELLOWS EXP.JOINT 6INX11 150LB	1
134	MH040-34	GASKET 150LB FLANGE 6.00 REINF	3
135	SA001-81	COUPLING S-FLEX HUB 1.625 BORE	1
137	VA002-68	GATE VALVE HIGH TEMP 6.0	1
138	VA002-69	BALL VALVE HIGH TEMP 1.5IN	2
139	VA002-63	GATE VALVE HIGH TEMP 3.0	1
140	VA002-62	GATE VALVE HIGH TEMP 3.0	2
141	MH024-16	BELLOWS EXP.JOINT 3INX6 150LB	2
142	PI40440	PIPE SS .50 SCHED 40 X 12"	1
143	PI11640	PIPE BLK 2.00 SCHED 40 X 45.000 in LG.	4

MATERIALS LIST

ITEM	LE PART NUMBER	DESCRIPTION	QTY
1	242035-001	HEATER BASE STRUCTURE	1
2	242036-001	EXPANSION TANK LEGS	2
3	242037-001	EXPANSION TANK LEGS CROSS MEMB	2
4	280312-001	HEATER INLET THERMO OIL PIPE	2
6	280314-001	HEATER OUTLET THERMO OIL PIPE	1
7	280315-001	NITROGEN PIPE CONNECTION	1
8	280316-001	THERMOFLUID OIL PUMP MANIFOLD	1
9	280317-001	THERMOFLUID OIL PUMP INTAKE	1
10	280318-001	THERMOFLUID OIL RETURN PIPE	1
11	280319-001	THERMOFLUID OIL TANKS CONNECT	1
12	280320-001	THERMOFLUID OIL EXPANSION LINE	1
13	280321-001	THERMOFLUID OIL BREATHING LINE	1
14	280322-001	THERMOFLUID OIL MAX LEVEL LINE	1
15	280323-001	THERMOFLUID OIL MAIN FLOW LINE	1
16	355794-001	FLOW LEVEL EXTENSION 17.0IN	1
17	EL020-57	THERMOCOUPLE ADJ PROBE 3/16	2
20	FA260025	REG HEX NUT SS, 1.00-8	6
22	HY005-26	GAUGE 60PSI LIQUID FILLED SS	5
23	HY006-20	MULTITHERM OG-1 OPEN CIRCUIT	1
25	HY012-225	SIGHT GLASS REFLEX TYPE	1
27	MH017-44	HT0180 FLAT FLANGED PUMP 5HP	2
29	MH020-17	VIBRATION PAD MIG	6
30	MH031-16	HIGH TEMP LIQUID LEVEL SWITCH	1
31	MH031-21	THERMAL FLUID LEVEL CUT OFF SW	2
32	MH031-22	THERMAL FLUID LEVEL CUT OFF SW	2
33	MH032-08	THERMOWELL 1/2 NPT SS	2
34	MH040-12	GASKET 150LB FLANGE 1.50	5
35	MH040-13	GASKET 150LB FLANGE 2.00	1
36	MH040-30	METAL REINFORCED 3.0 ANSI300	5
37	MH040-31	GASKET 150LB FLANGE 3.00	8
39	MH040-43	GASKET 3000LB FLANGE 6.00	4
40	MH041-10	GAUGE PROTECTING STEAM 1/4	4
41	PF1010604	BUSHING BLK. 0.75 x 0.50/0.81 OD OUT	1
42	PF1010804	BUSHING BLK 1.00 TO .50	1
43	PF1011208	BUSHING BLK 1.50 TO 1.00	2
44	PF1011608	BUSHING BLK. 2.00 x 1.00	1
45	PF10208	CAP BLK 1.00	3
46	PF10602	ELBOW BLK. Φ 0.25 90º	2
47	PF10604	ELBOW BLK. Φ 0.50 90º	1
48	PF10608	ELBOW BLK Φ 1.00 x 90º	11
49	PF10612	ELBOW BLK 1.50	4
50	PF1090212	NIPPLE BLK. Φ 0.25 x 1.50 LG.	7
51	PF1090412	NIPPLE BLK. 0.50 x 1.50 LG.	2
52	PF1090816	NIPPLE BLK Φ 1.00 x 2.00 LG.	29
53	PF1090824	NIPLE BLK Φ 1.00 x 3.00 LG.	6
54	PF1091216	NPPLE BLK 1.50X 2.00 LONG	6
55	PF11108	TEE BLK Φ 1.00	7
56	PF11112	TEE BLK 1.50	2
57	PF11204	UNION BLK 0.50	1
58	PF11208	UNION BLK 1.0	11
59	PF11212	UNION BLK 1.50	4

NO	REVISION	BY	DATE	BY	DATE
A	RELEASE TO PRODUCTION	OKM	08/21/24		

REMOVE ALL BURRS AND BREAK ALL SHARP EDGES

TOLERANCES EXCEPT AS NOTED

DECIMALS .XX ± .01
.XXX ± .005
ANGLES ± 1/2°

THIS DRAWING IS A CONFIDENTIAL NATURE AND IS THE EXCLUSIVE PROPERTY OF LAWRENCE EQUIPMENT, AND MAY NOT BE REPRODUCED, USED OR DISCLOSED WITHOUT PRIOR WRITTEN PERMISSION OF THE OWNER.

LAWRENCE EQUIPMENT
2034 NORTH PECK ROAD
SO. EL MONTE, CALIFORNIA 91733
(626) 442-2894 TELEX 704116
TOLL FREE (800) 423-4500

THERMOFLUID HEATER ASSY 4.0MM

0CF6018-01

DRAWN BY Nicola	DATE 10/10/2014	SCALE:	
CHECKED BY	DATE	DRAWING NO. 809276	REV A / SHEET 1 of 4
APPROVED BY	DATE		

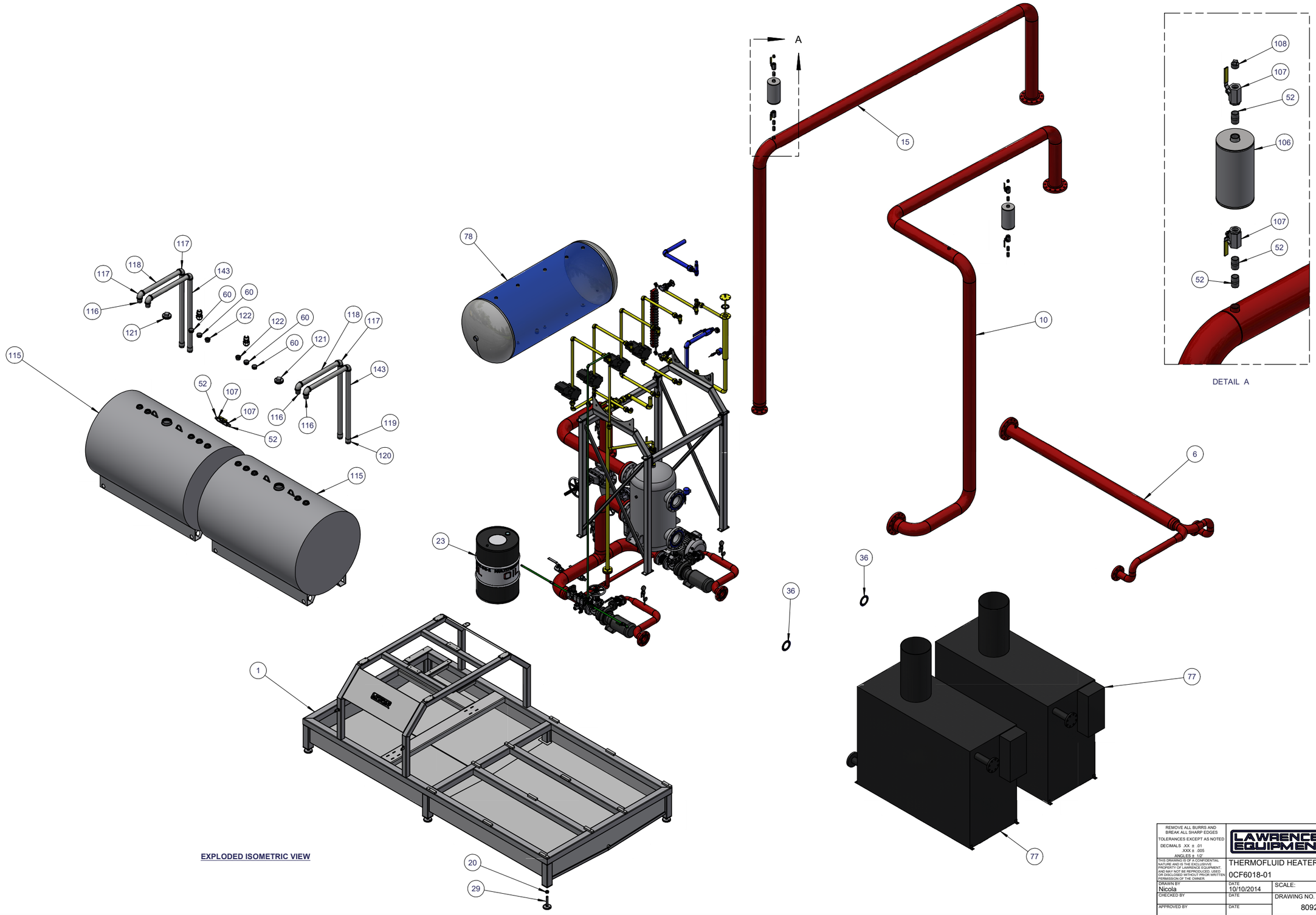

EXPLODED ISOMETRIC VIEW

REMOVE ALL BURRS AND BREAK ALL SHARP EDGES TOLERANCES EXCEPT AS NOTED DECIMALS .XX ± .01 .XXX ± .005 ANGLES ± 1/2°	LAWRENCE EQUIPMENT	2034 NORTH PECK ROAD SO. EL MONTE, CALIFORNIA 91733 (626) 442-2894 TELEX 704116 TOLL FREE (800) 423-4500		
THIS DRAWING IS OF A CONFIDENTIAL NATURE AND IS THE EXCLUSIVE PROPERTY OF LAWRENCE EQUIPMENT, AND MAY NOT BE REPRODUCED, USED, OR DISCLOSED WITHOUT PRIOR WRITTEN PERMISSION OF THE OWNER.	THERMOFLUID HEATER ASSY 4.0MM 0CF6018-01			
DRAWN BY Nicola	DATE 10/10/2014	SCALE: NONE		
CHECKED BY	DATE	DRAWING NO. 809276	REV A	SHEET 2 of 4
APPROVED BY	DATE			

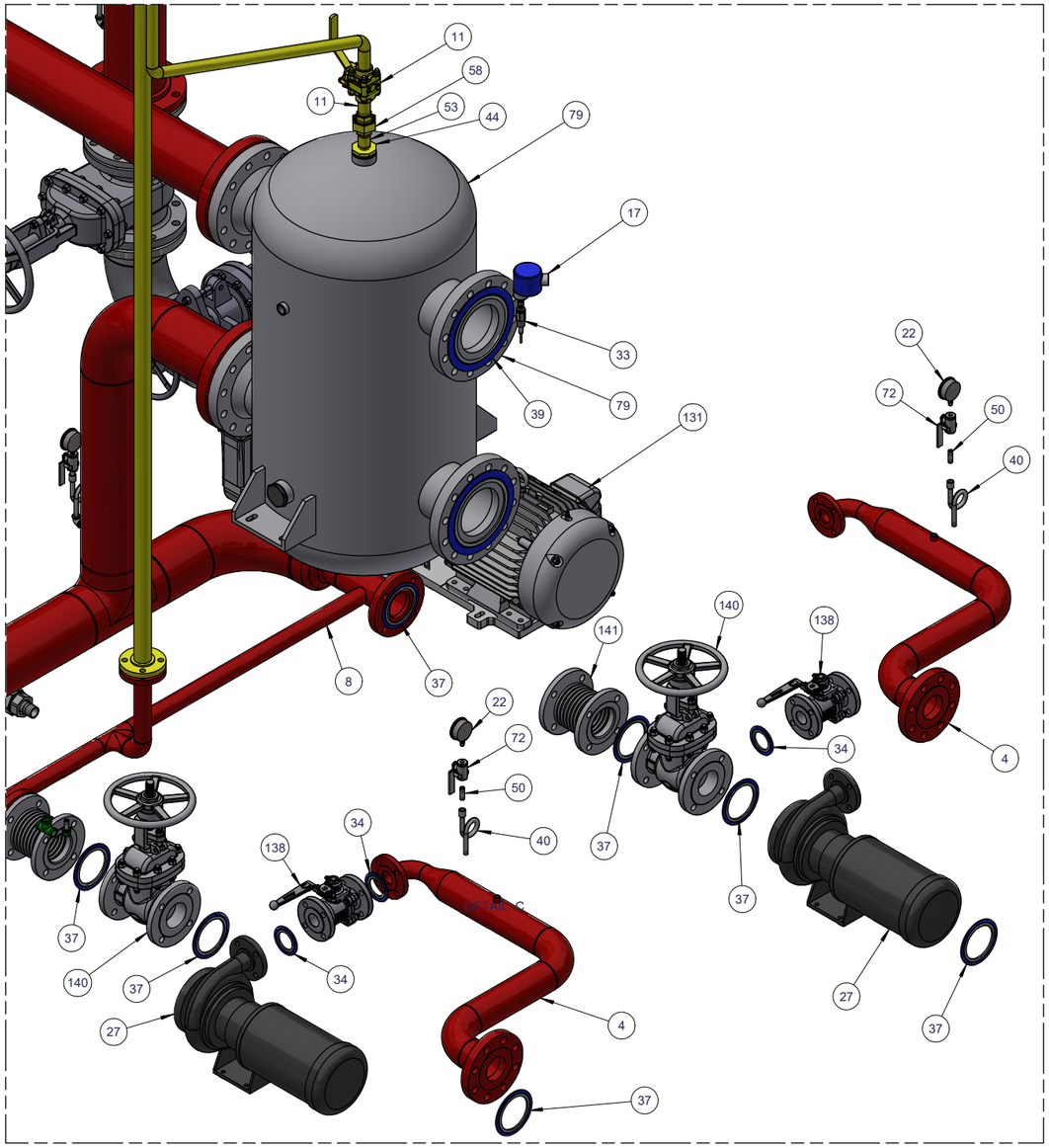

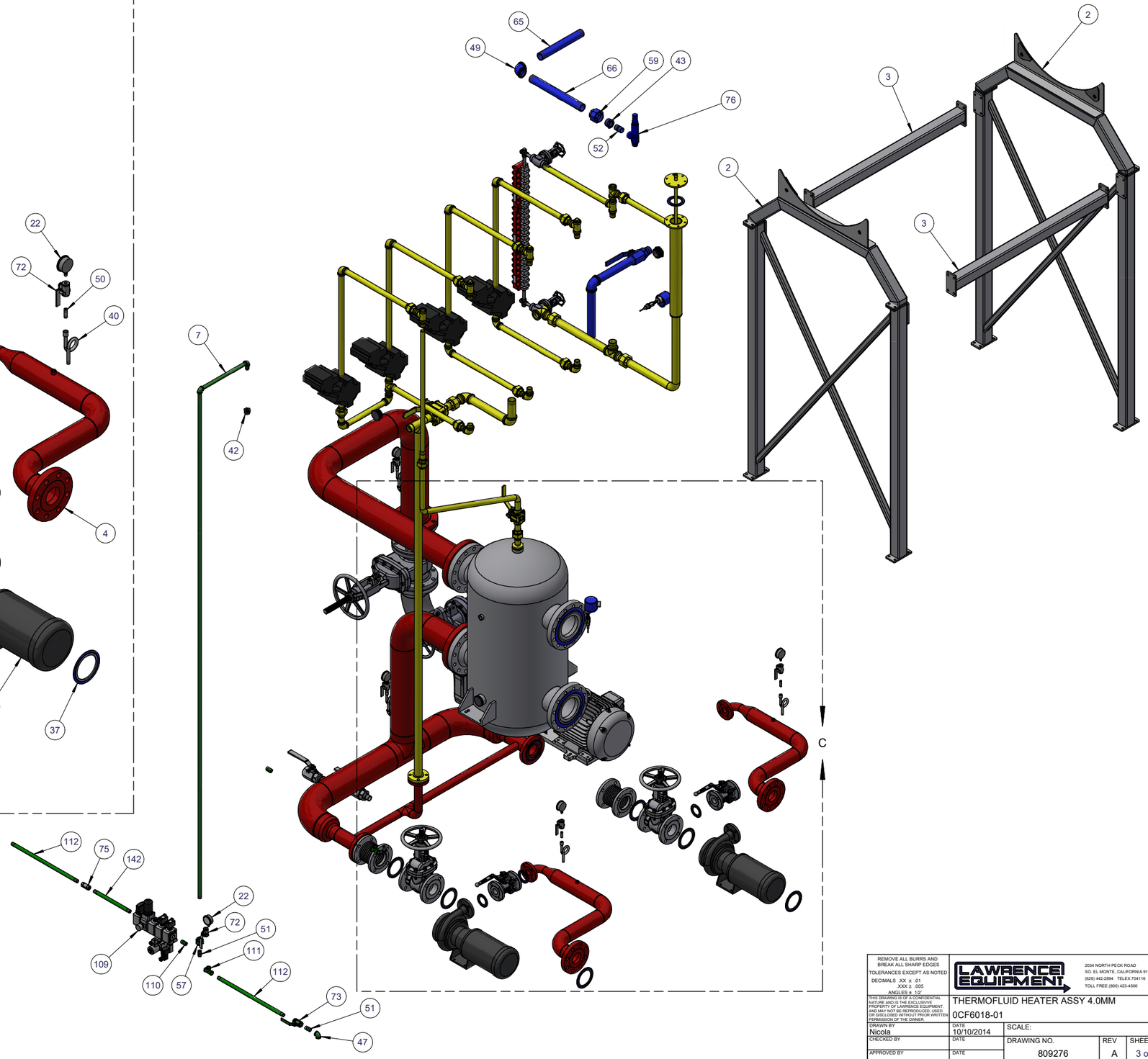

EXPLODED ISOMETRIC VIEW

REMOVE ALL BURRS AND BREAK ALL SHARP EDGES

TOLERANCES EXCEPT AS NOTED
DECIMALS .XX ± .01
.XXX ± .005
ANGLES ± 1/2°

THIS DRAWING IS OF A CONFIDENTIAL NATURE AND IS THE EXCLUSIVVE PROPERTY OF LAWRENCE EQUIPMENT, AND MAY NOT BE REPRODUCED, USED OR DISCLOSED WITHOUT PRIOR WRITTEN PERMISSION OF THE OWNER.

LAWRENCE EQUIPMENT
2034 NORTH PECK ROAD
SO. EL MONTE, CALIFORNIA 91733
(626) 442-2894 TELEX 704116
TOLL FREE (800) 423-4500

THERMOFLUID HEATER ASSY 4.0MM
0CF6018-01

DRAWN BY Nicola	DATE 10/10/2014	SCALE:		
CHECKED BY	DATE	DRAWING NO. 809276	REV A	SHEET 3 of 4
APPROVED BY	DATE			

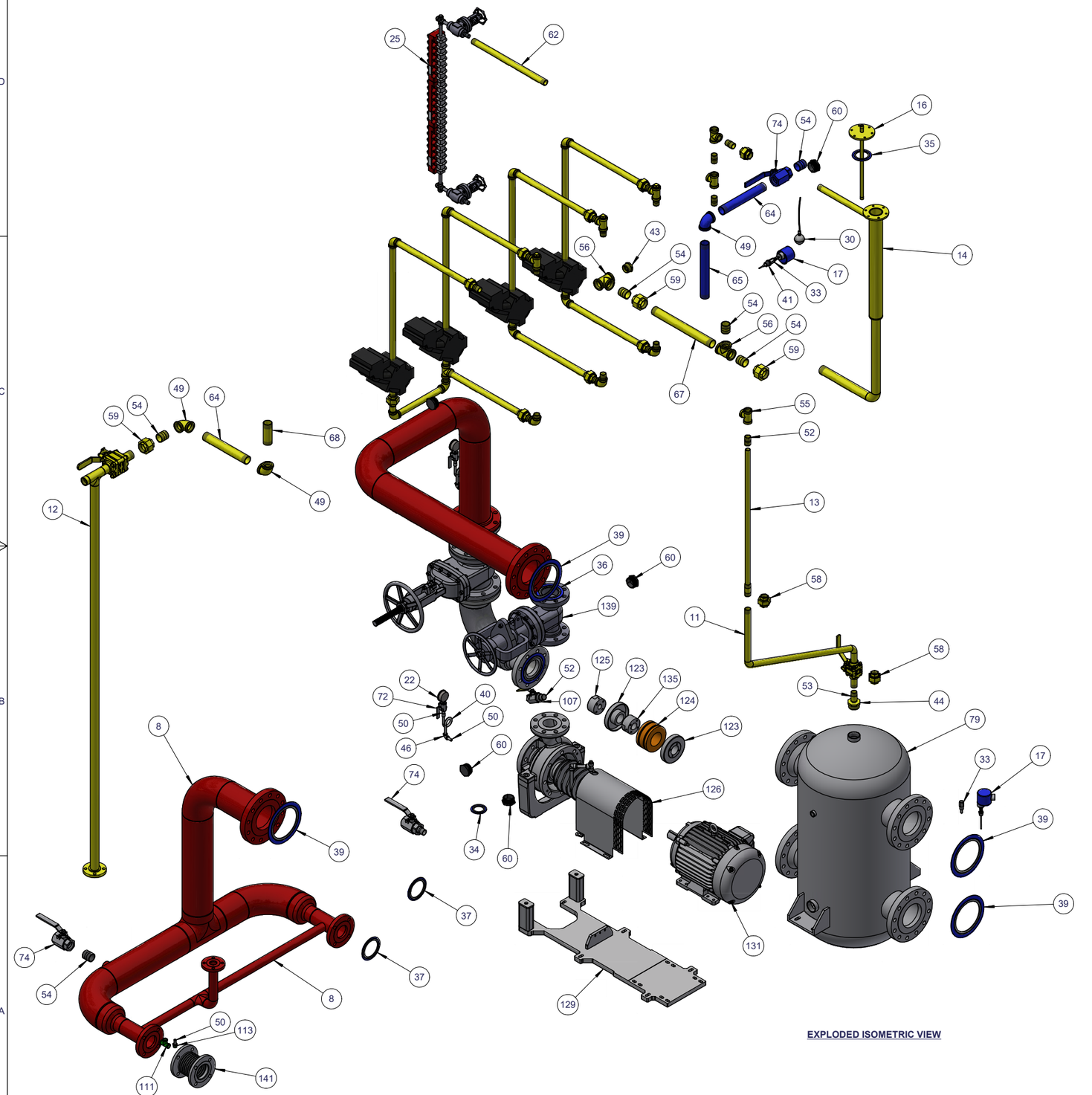

EXPLODED ISOMETRIC VIEW

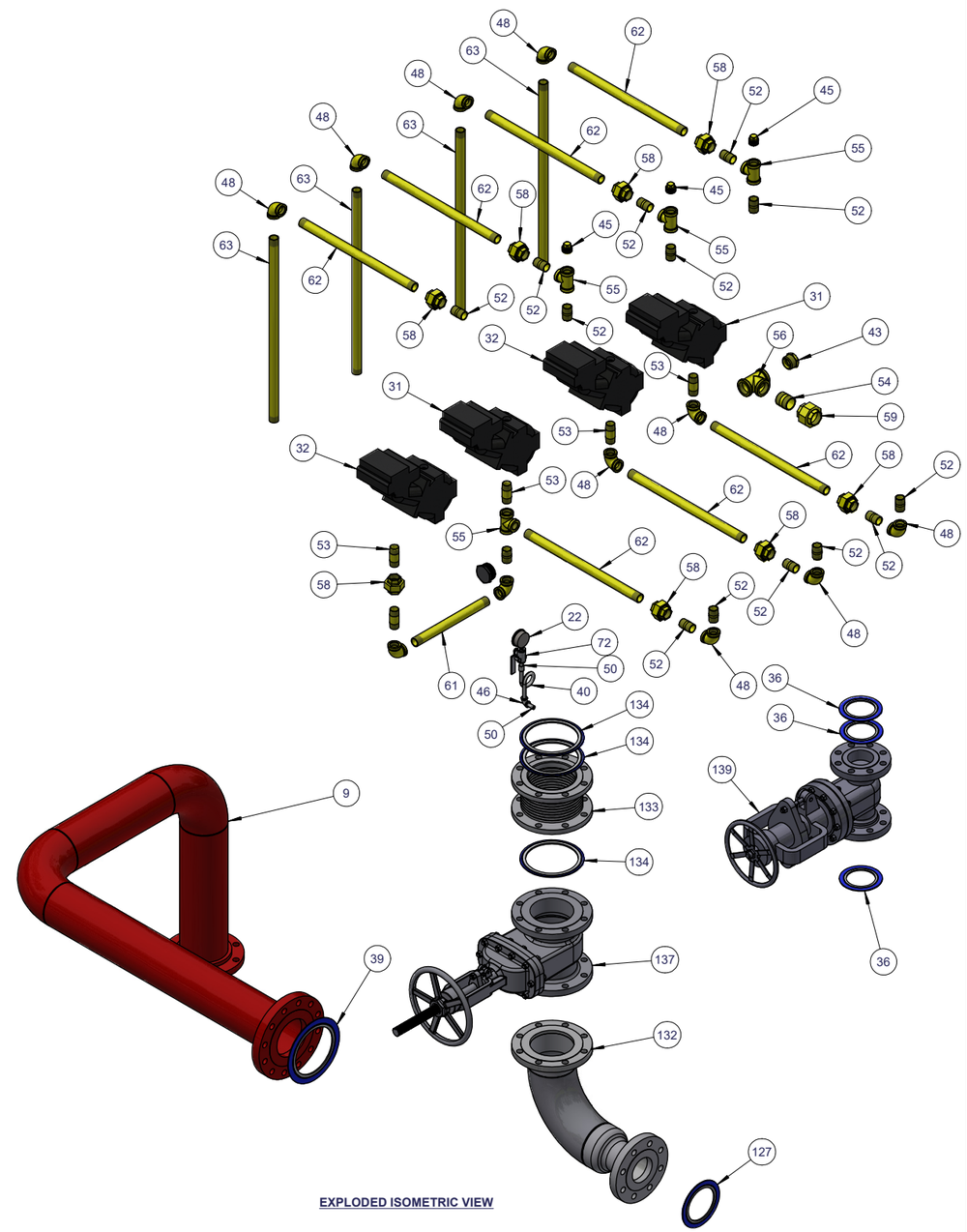

EXPLODED ISOMETRIC VIEW

REMOVE ALL BURRS AND BREAK ALL SHARP EDGES
TOLERANCES EXCEPT AS NOTED
DECIMALS .XX ± .01
.XXX ± .005
ANGLES ± 1/2°

THIS DRAWING IS OF A CONFIDENTIAL NATURE AND IS THE EXCLUSIVVE PROPERTY OF LAWRENCE EQUIPMENT, AND MAY NOT BE REPRODUCED, USED OR DISCLOSED WITHOUT PRIOR WRITTEN PERMISSION OF THE OWNER.

LAWRENCE EQUIPMENT
2034 NORTH PECK ROAD
SO. EL MONTE, CALIFORNIA 91733
(626) 442-2894 TELEX 704116
TOLL FREE (800) 423-4500

THERMOFLUID HEATER ASSY 4.0MM
0CF6018-01

DRAWN BY Nicola	DATE 10/10/2014	SCALE:		
CHECKED BY	DATE	DRAWING NO.	REV	SHEET
APPROVED BY	DATE	809276	A	4 of 4