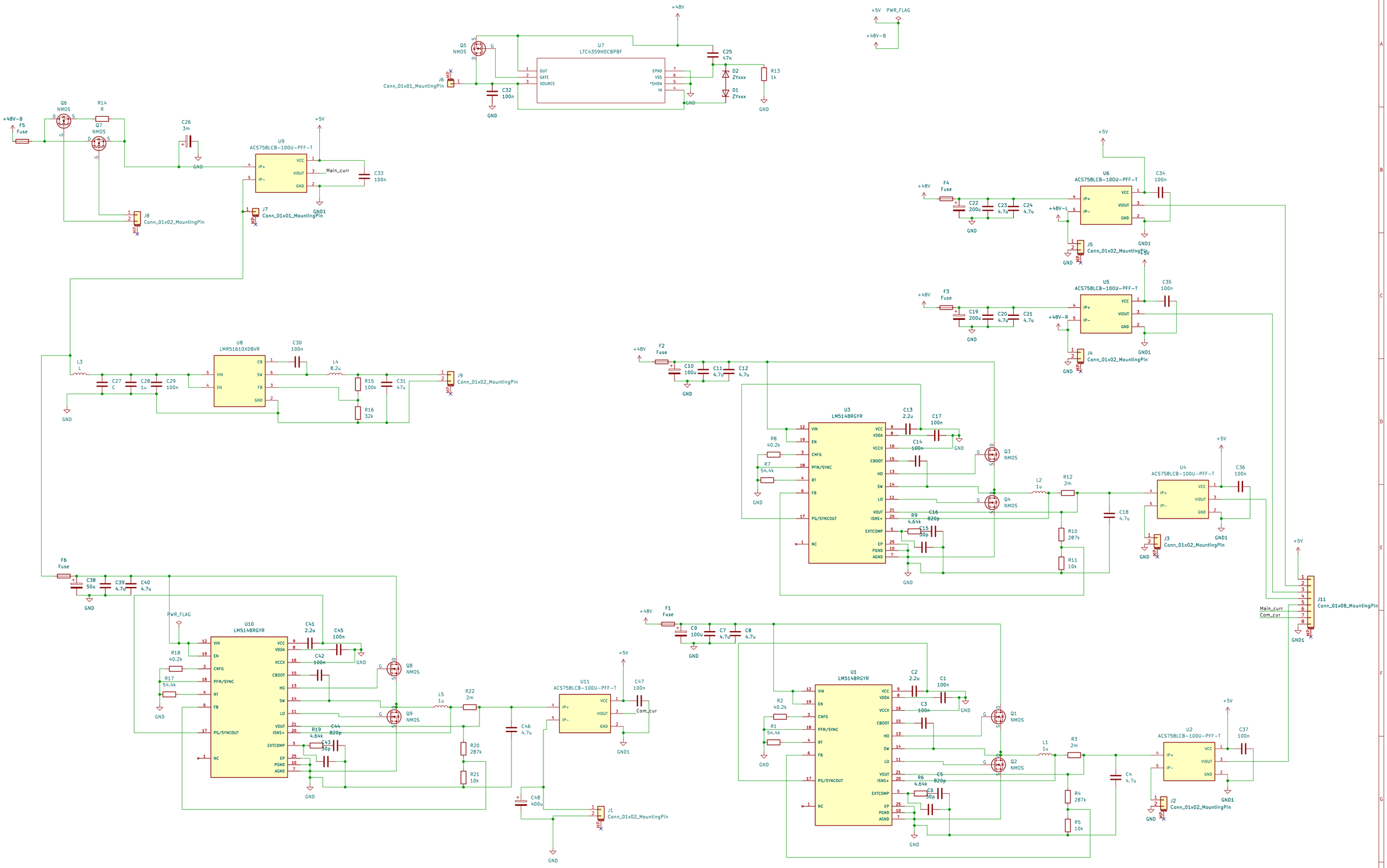

WiscoHumanoids

Sheet: /

File: Main_PDB.kicad_sch

Title: PDB

Size: A2	Date: 2026-04-01	Rev:
KiCad E.D.A. 9.0.7		Id: 1/1