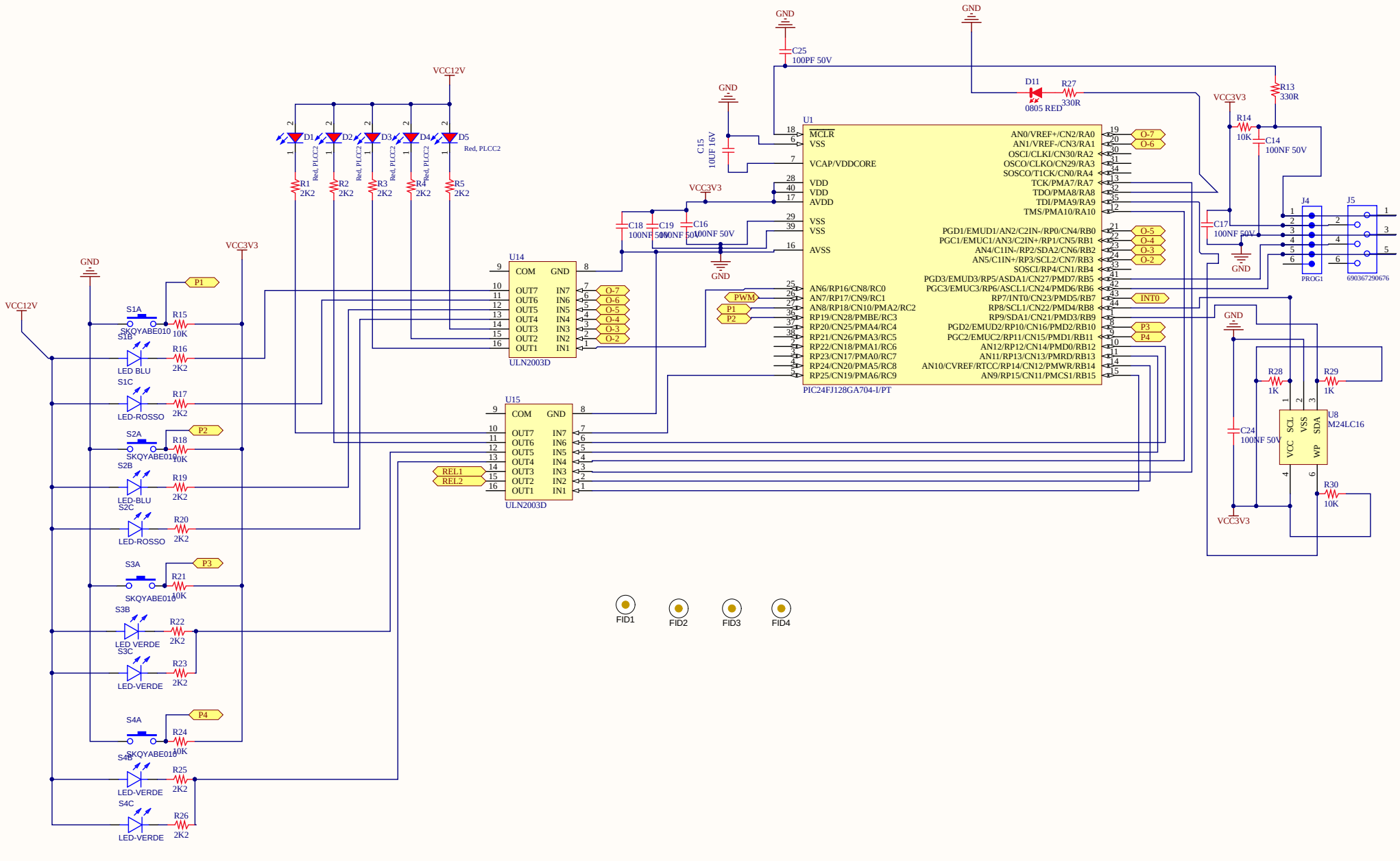

Title		
Size A3	Number	Revision
Date: 09/09/2019	Sheet of	
File: D:\PRJ - ALTIUM\..\CAPPA-S.SchDoc	Drawn By:	

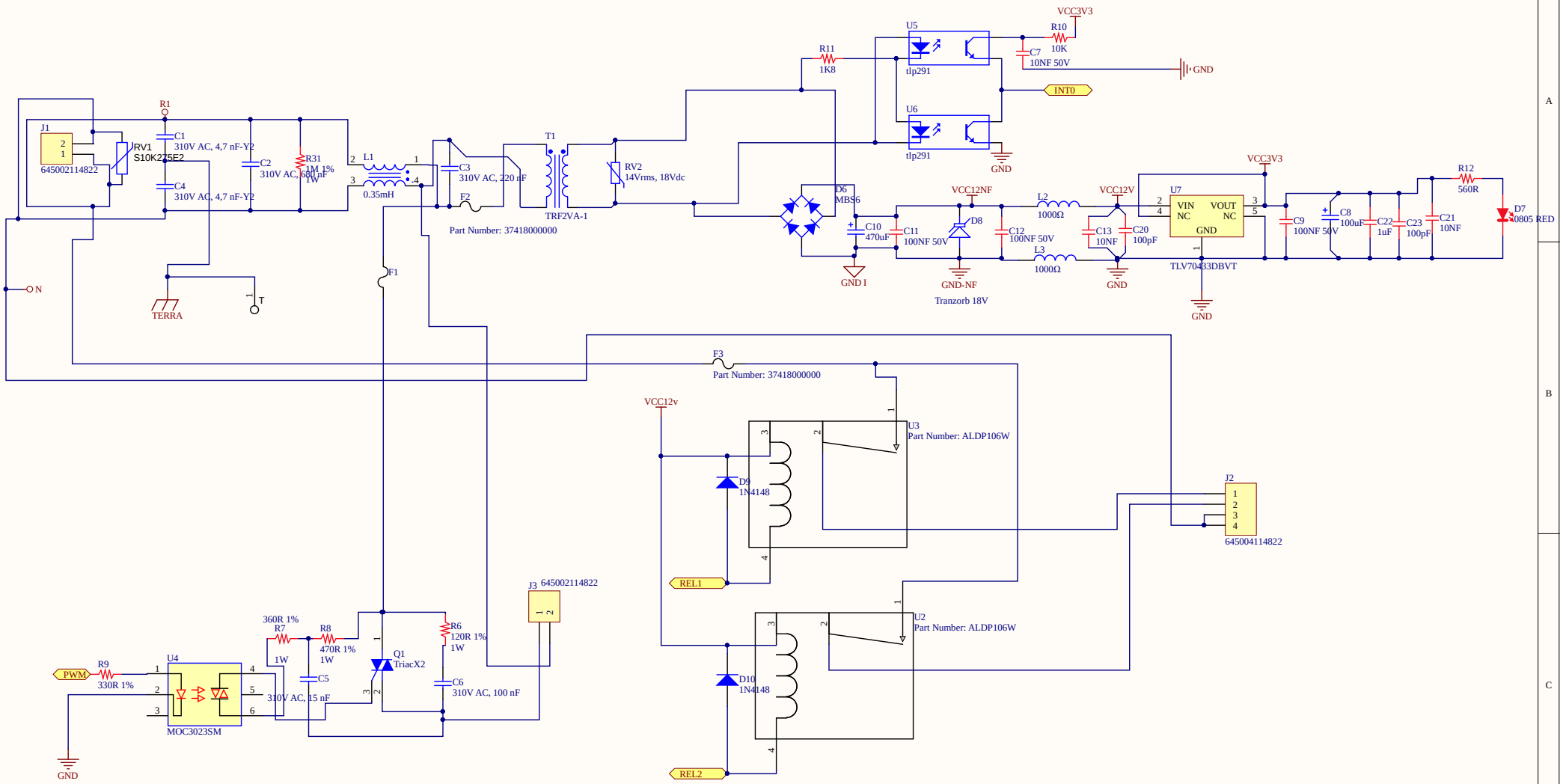

Title		
Size A3	Number	Revision
Date: 09/09/2019	Sheet of	
File: D:\PRJ - ALTIUM\..\CAPPA-S1.SchDoc	Drawn By:	