IVAR

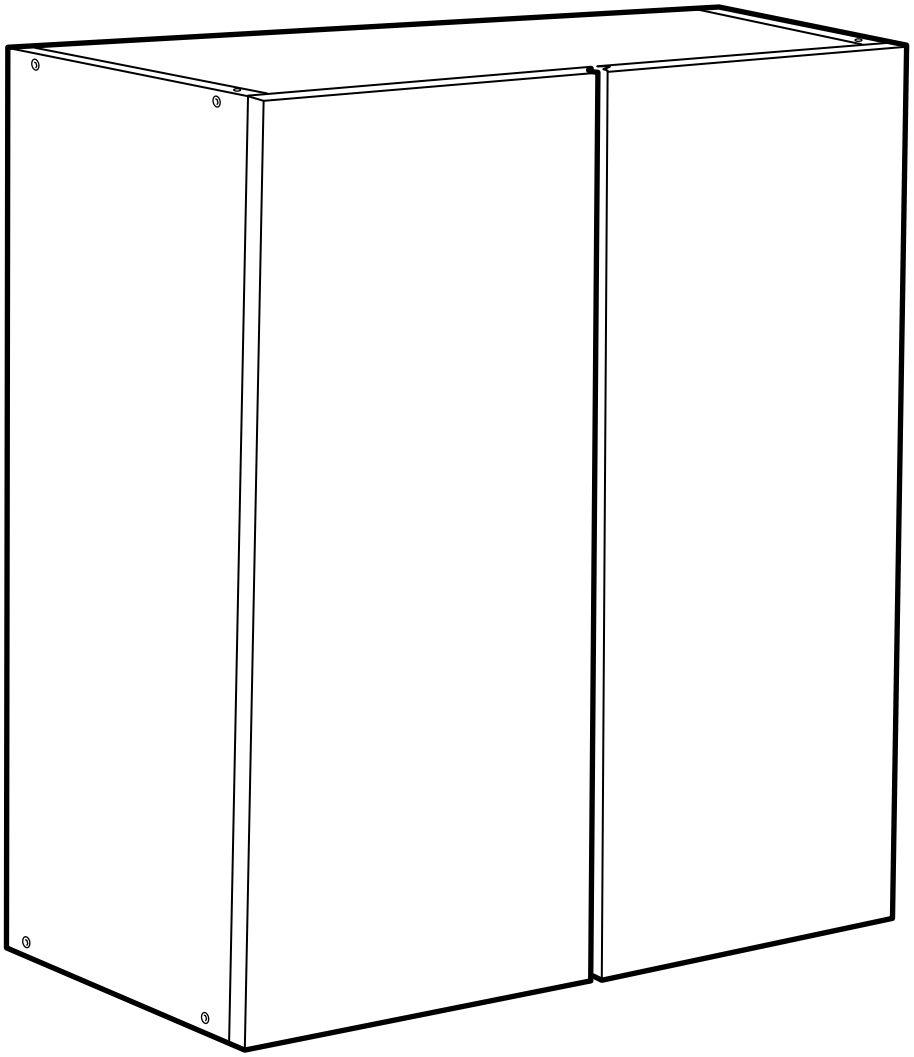

Design and Quality
IKEA of Sweden

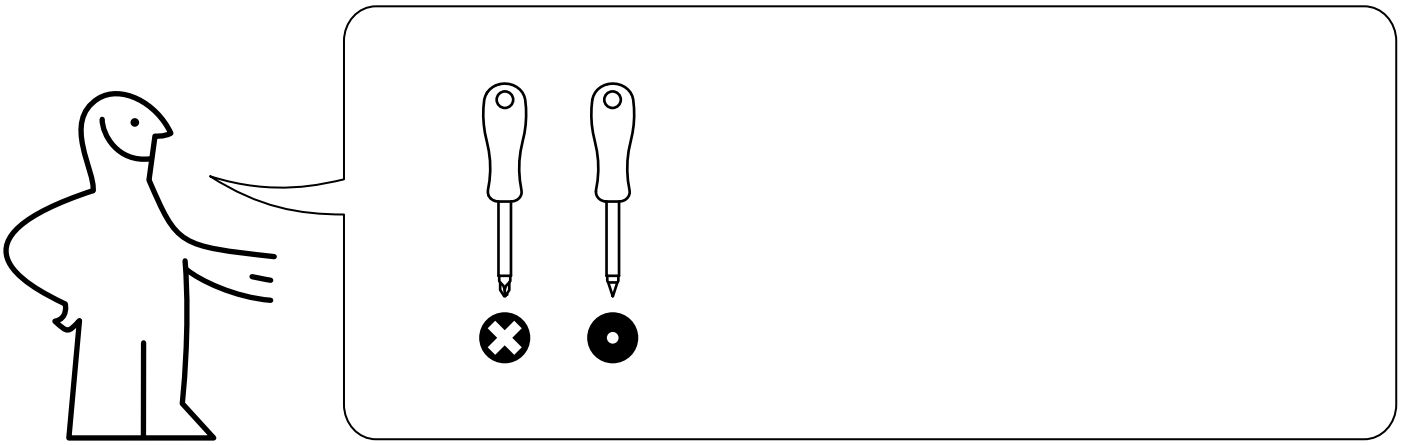

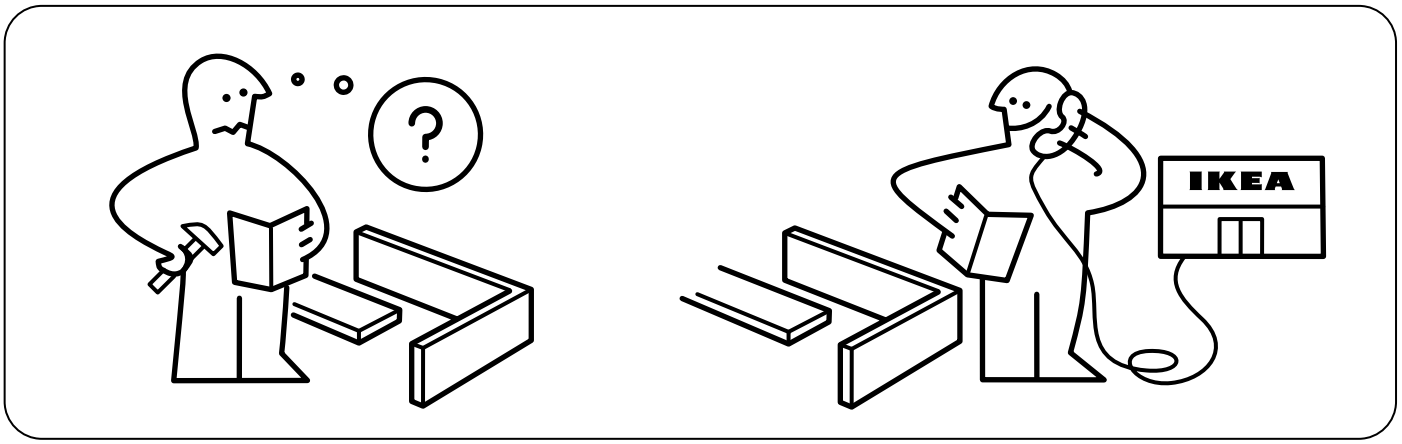
?
IKEA

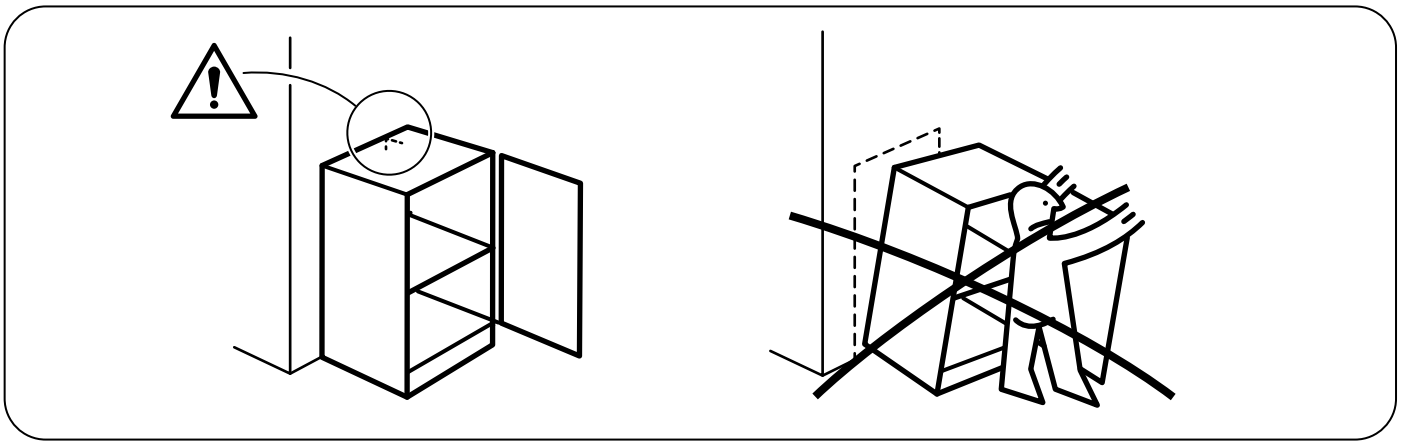

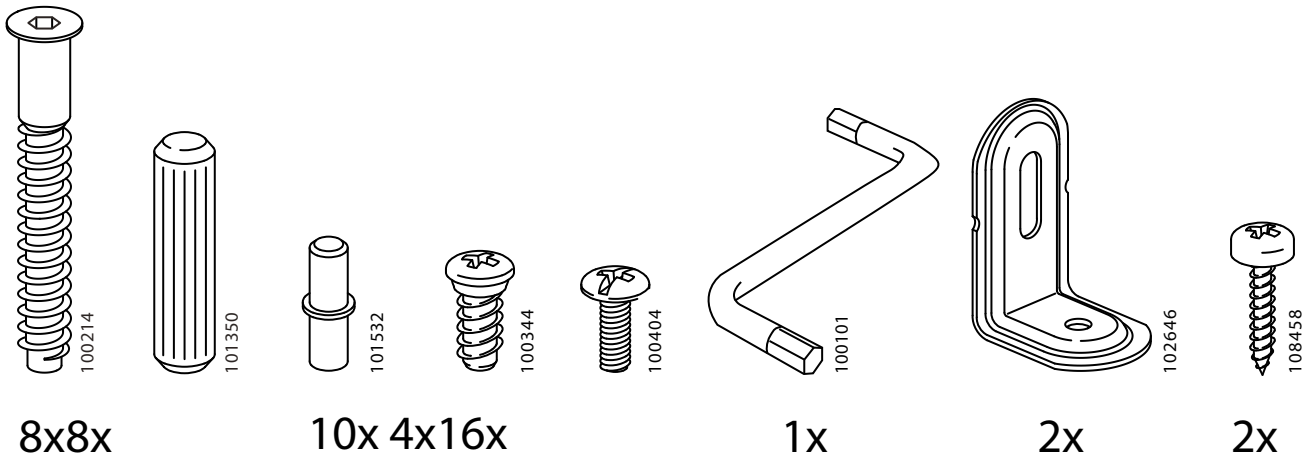
100214
101350
101532
100344
100404
100101
102646
108458
8x8x
10x 4x16x
1x
2x
2x

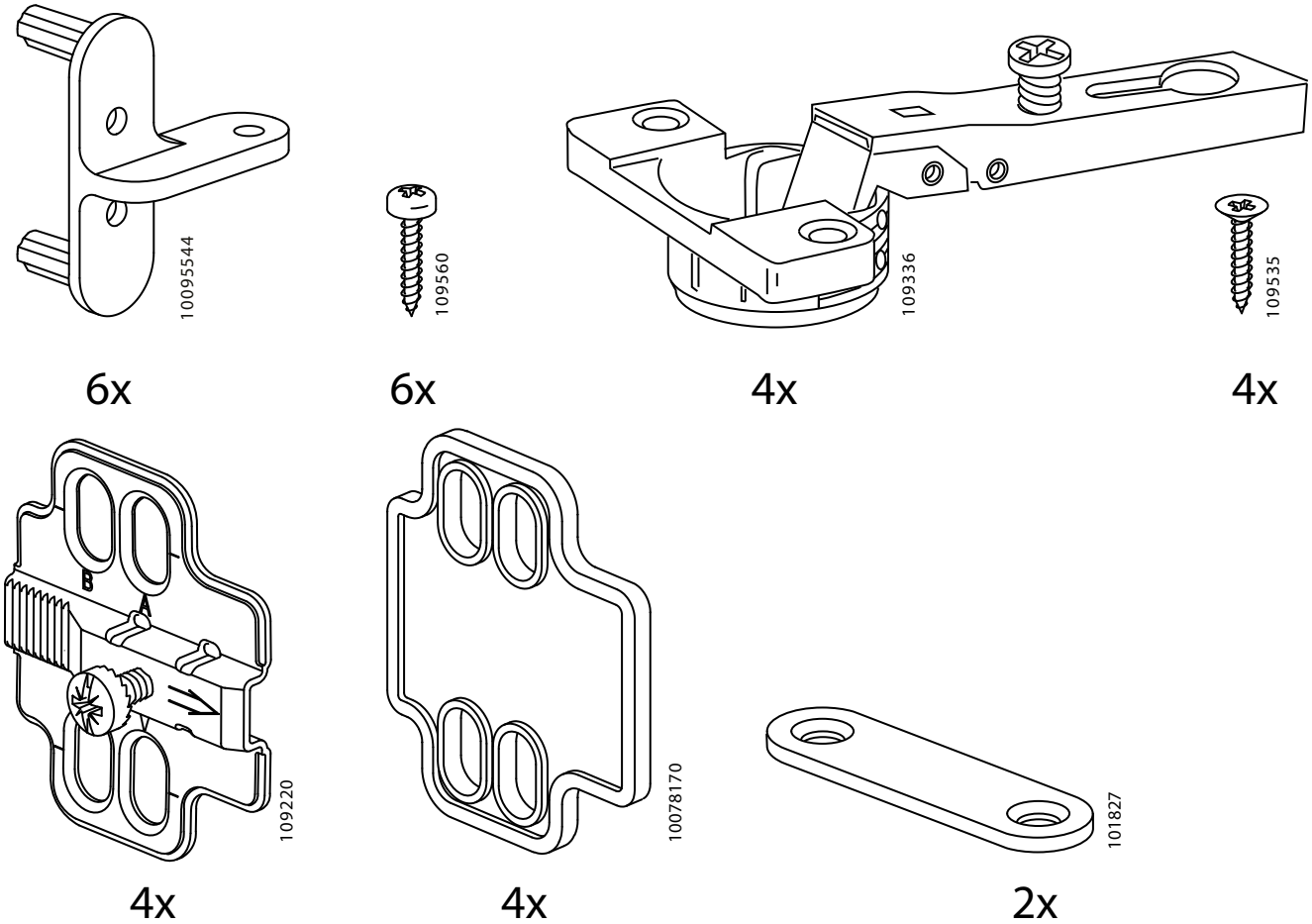
10095544
6x
109560
6x
109336
4x
109535
4x
B
A
109220
4x
10078170
4x
101827
2x

1

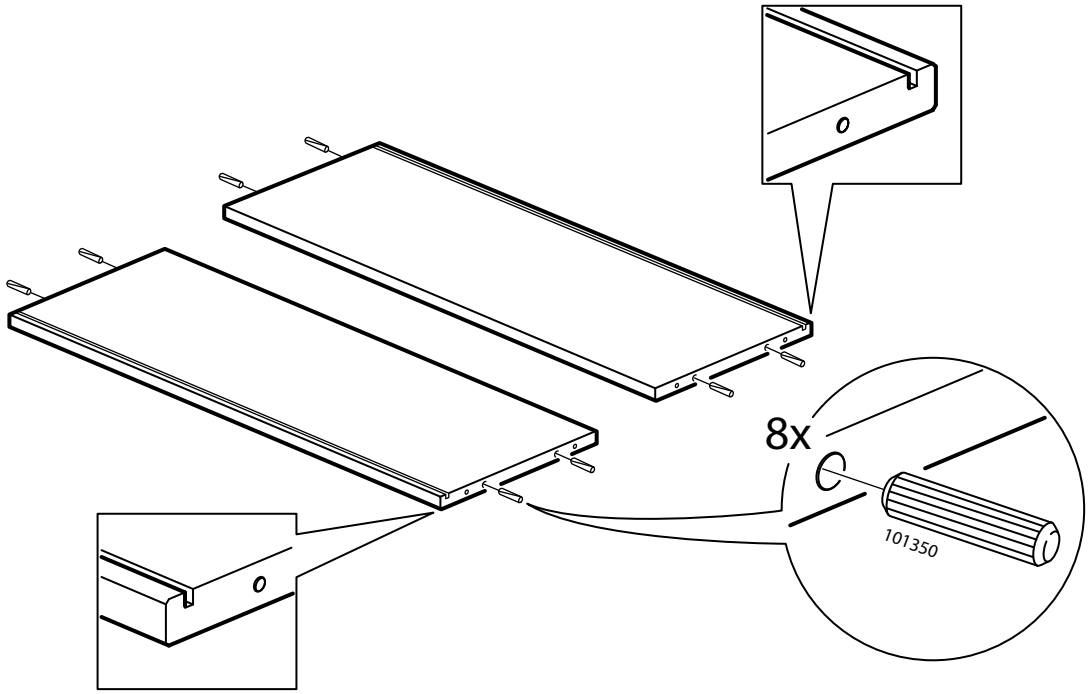
8x
101350

2

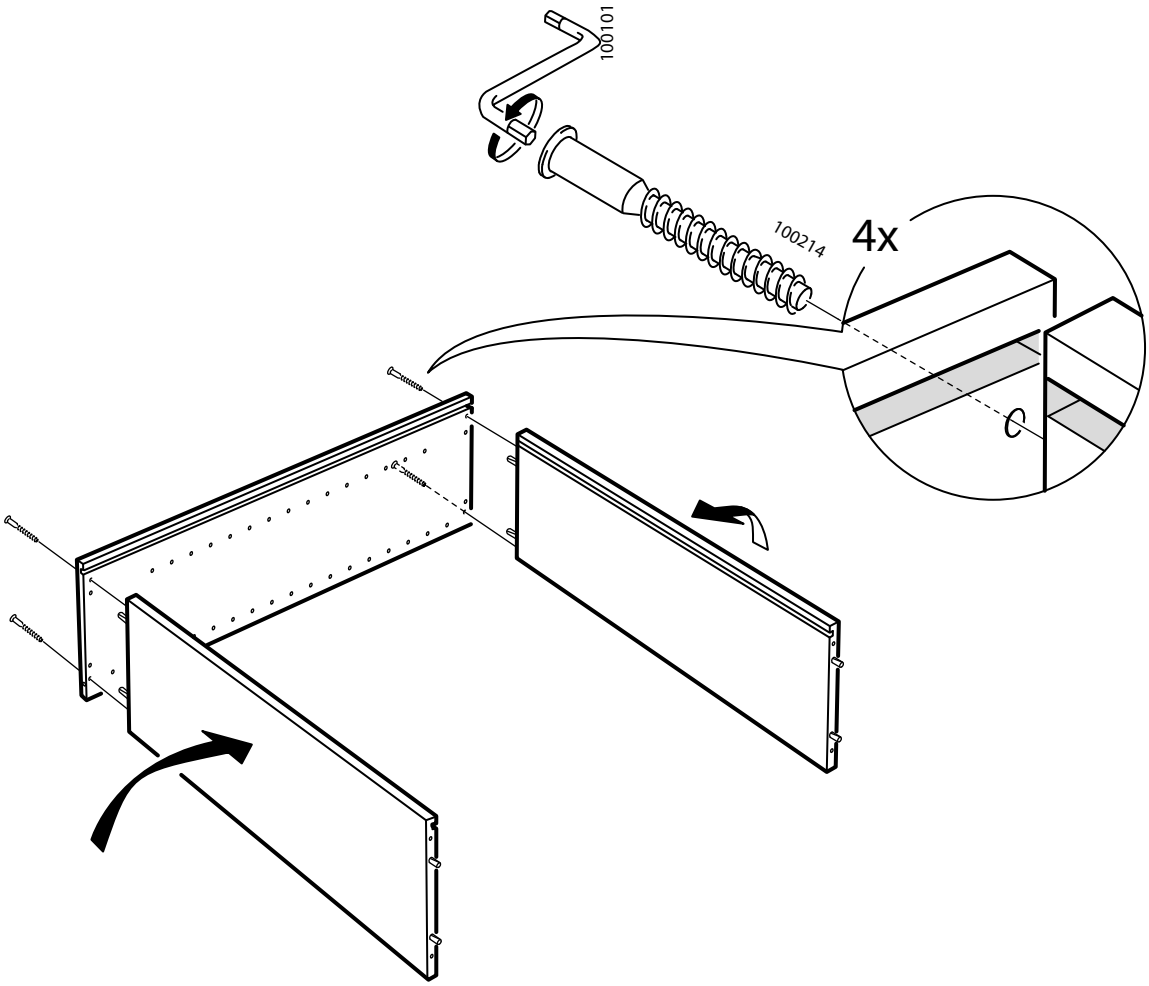

3

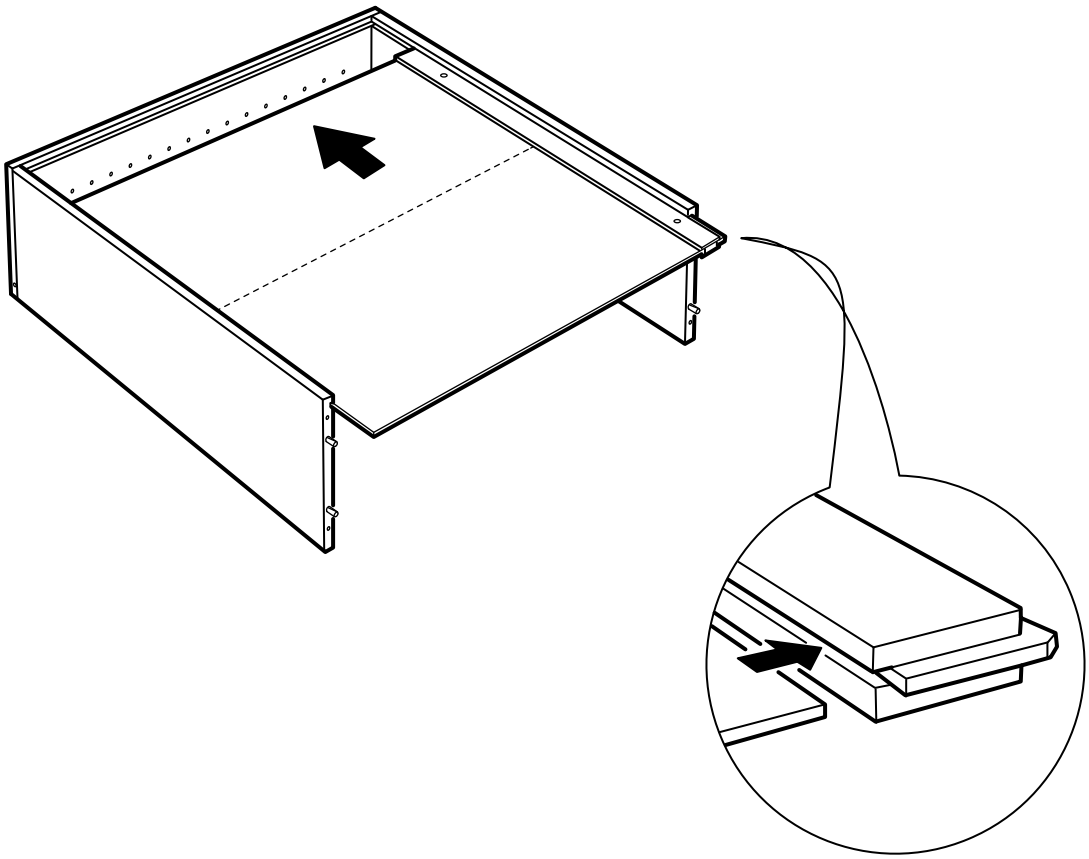

4

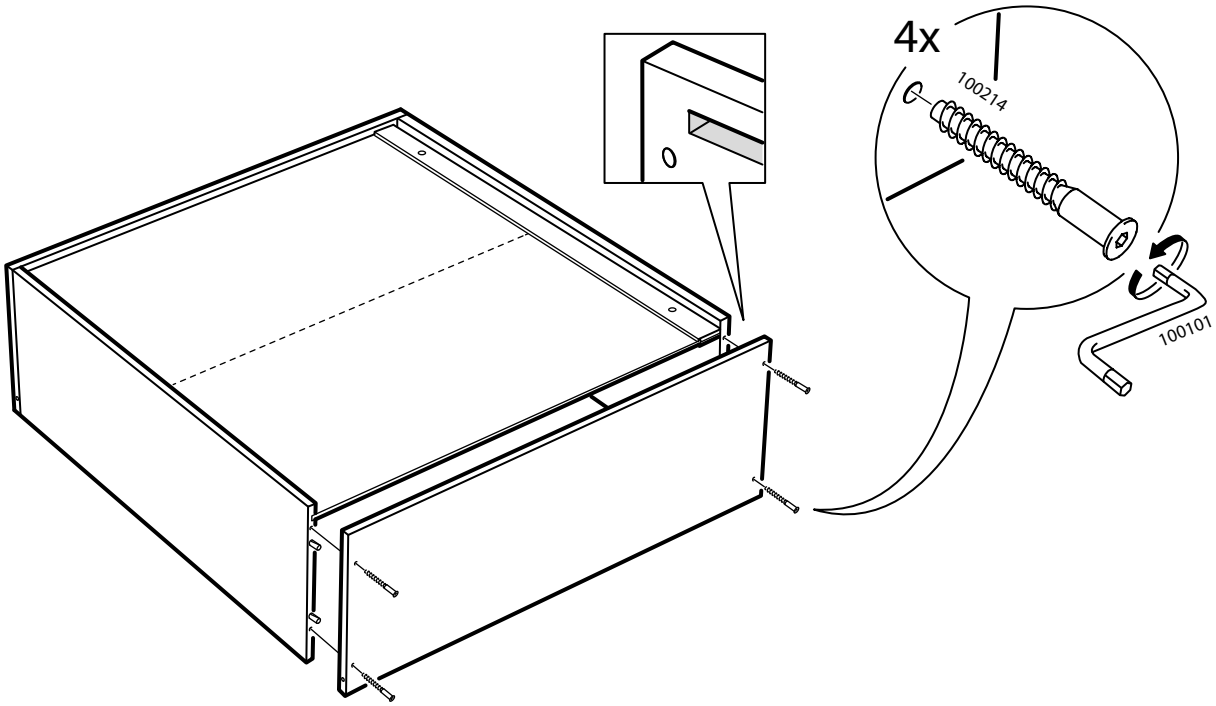

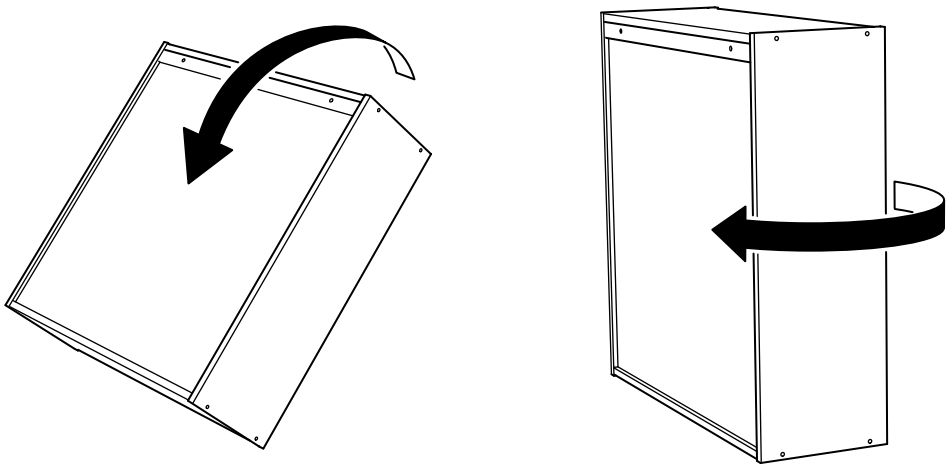

5

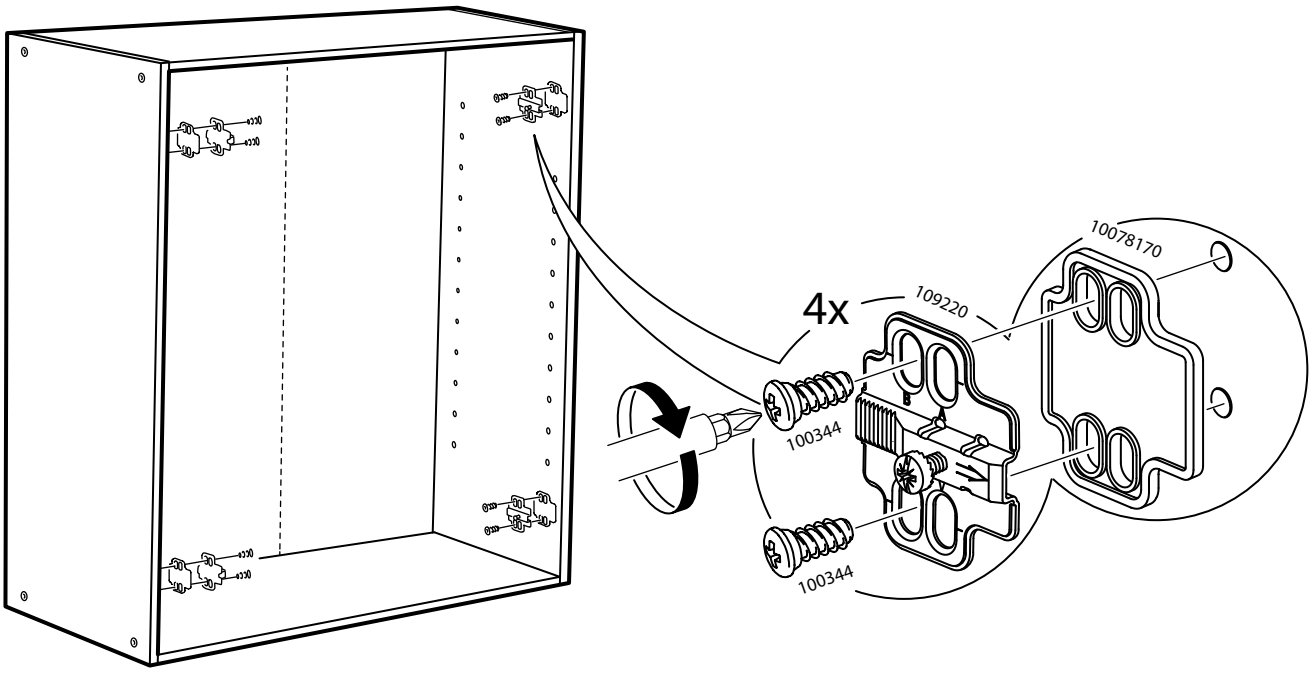

6

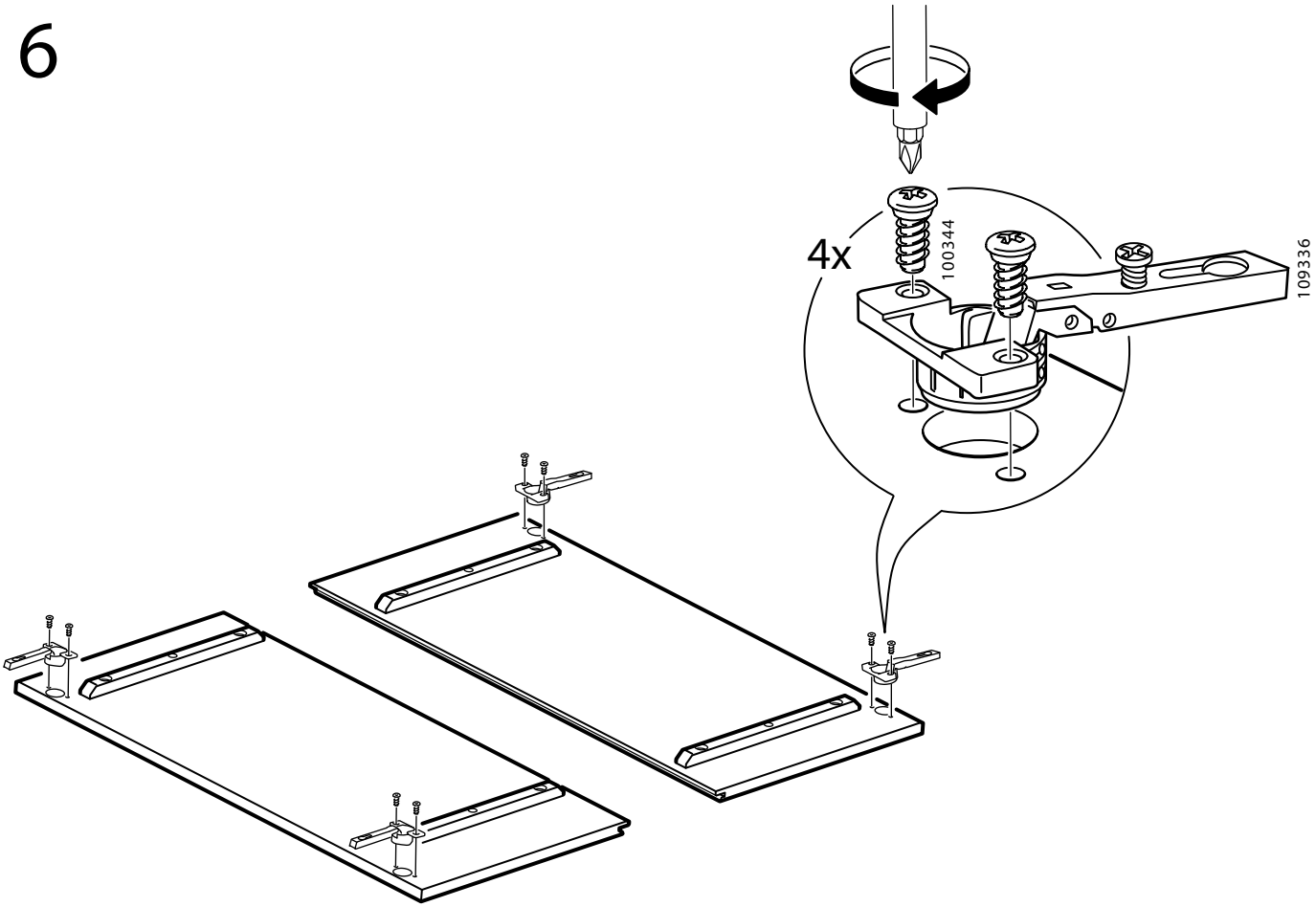

7

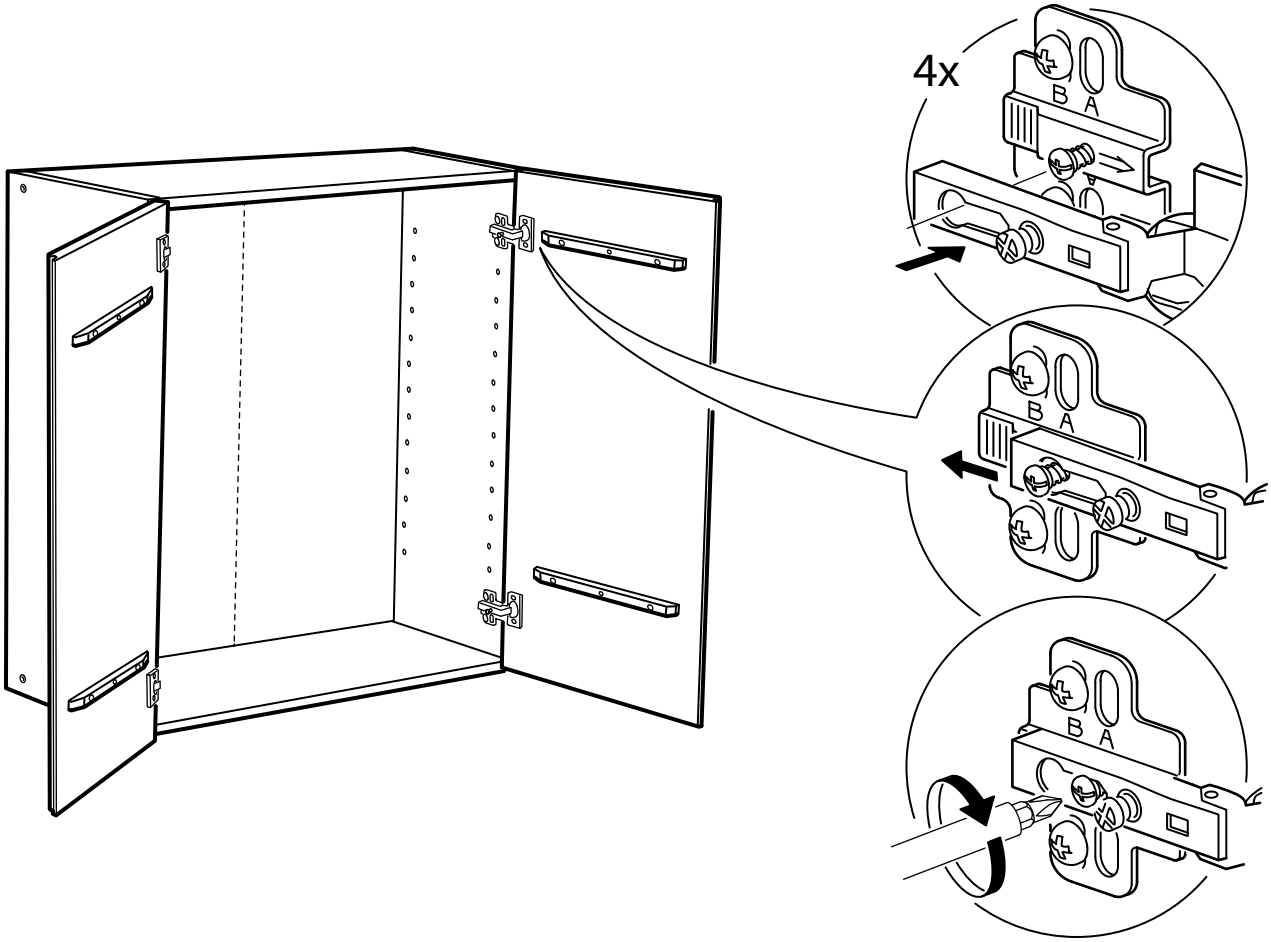

8

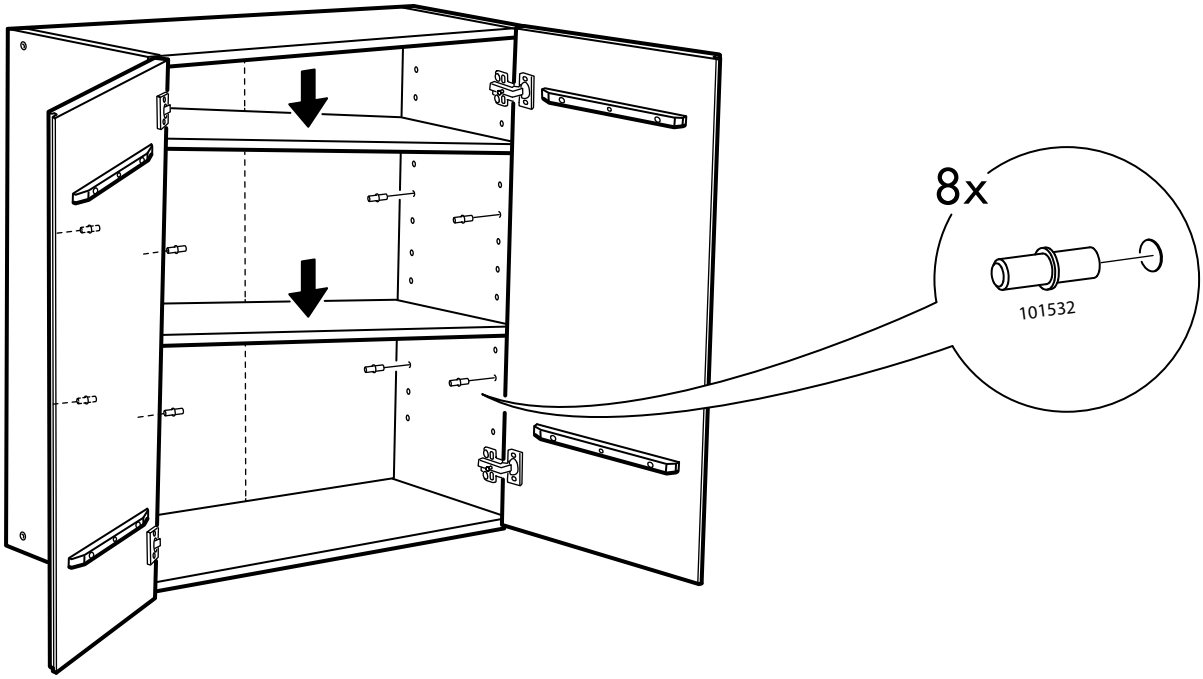

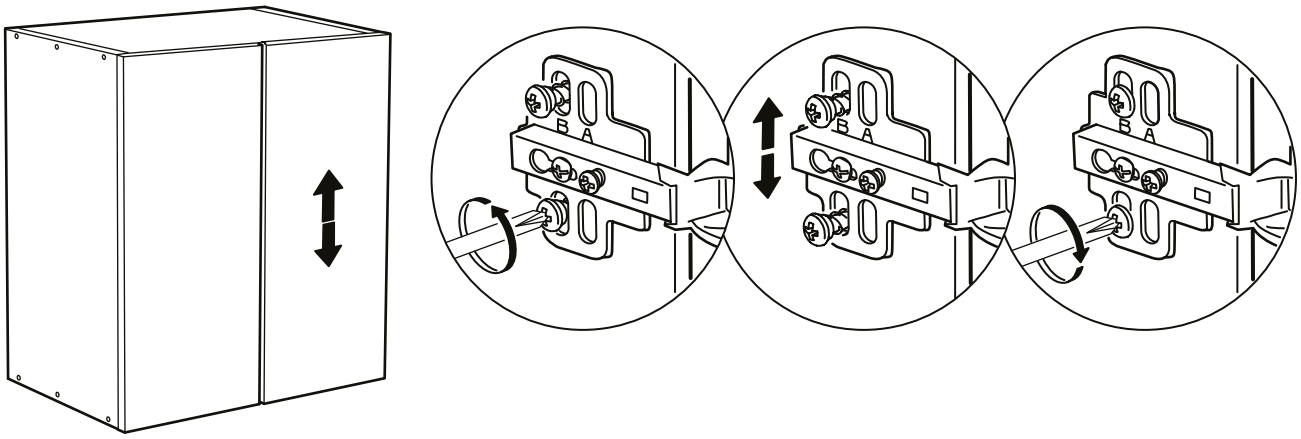
B A
B A
B A

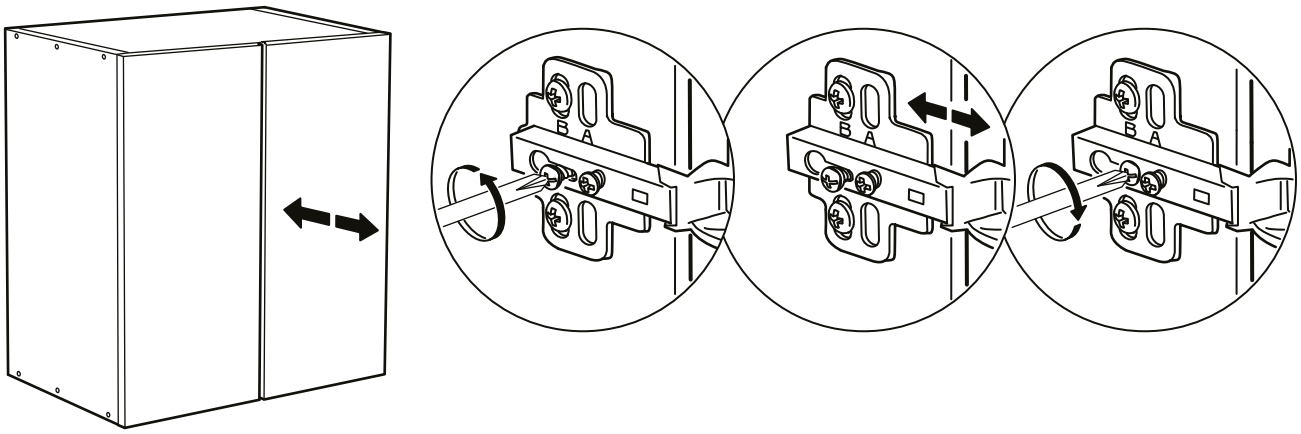
B A
B A
B A

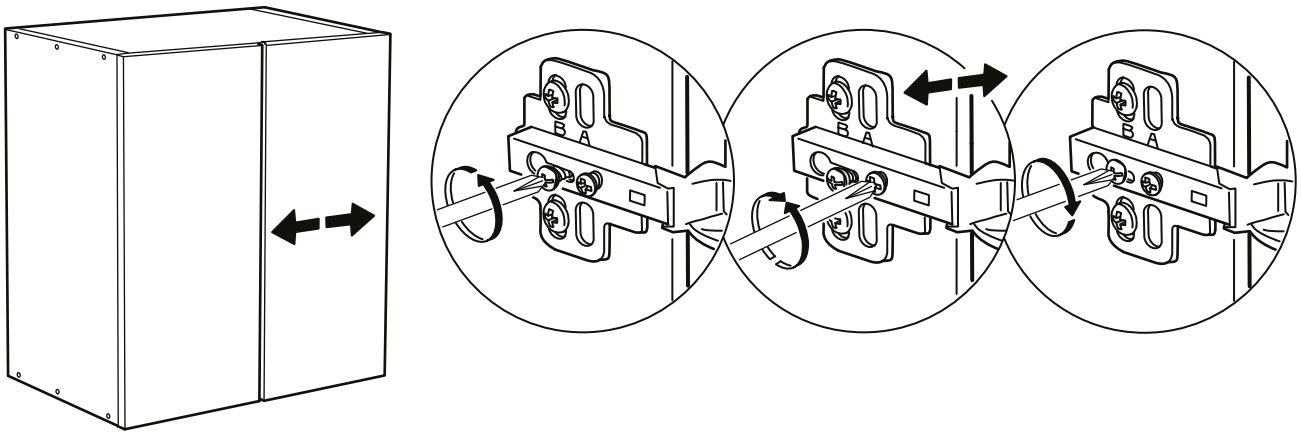
B A
B A
B A

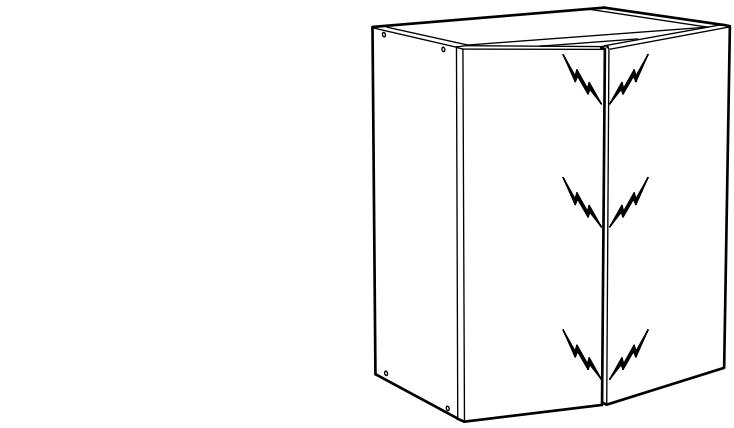

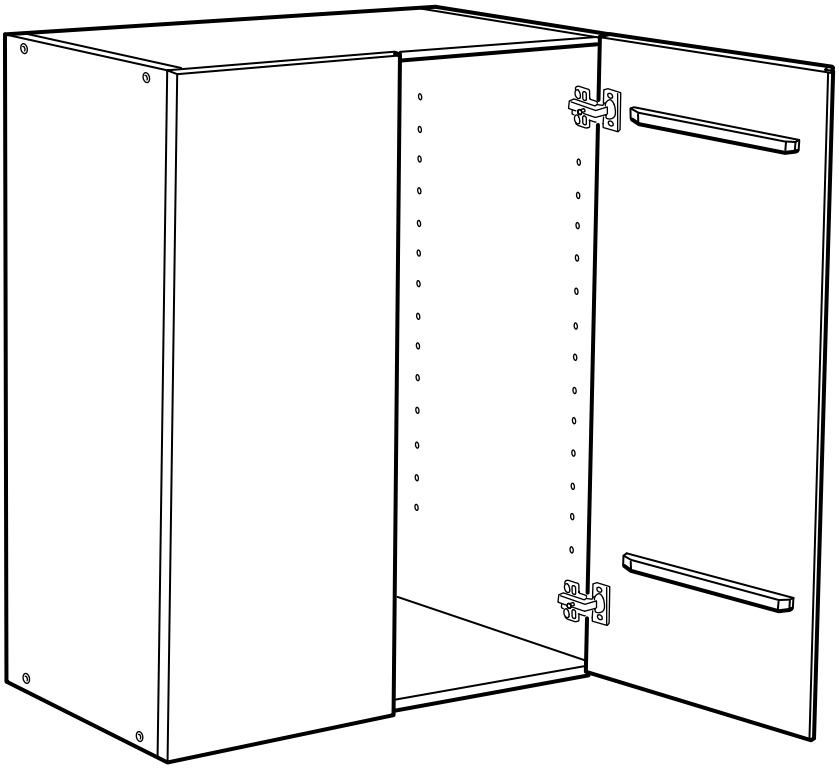

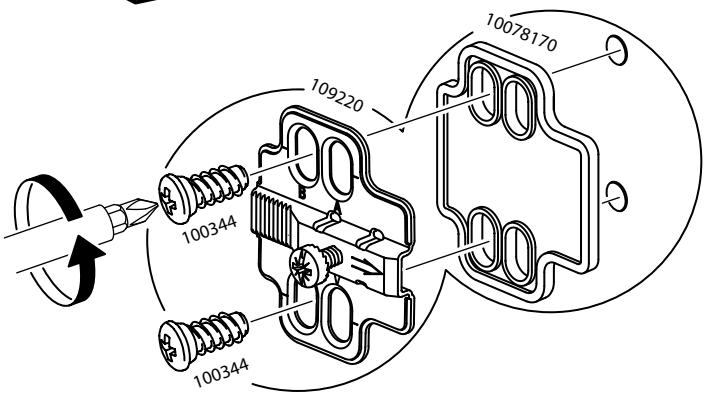

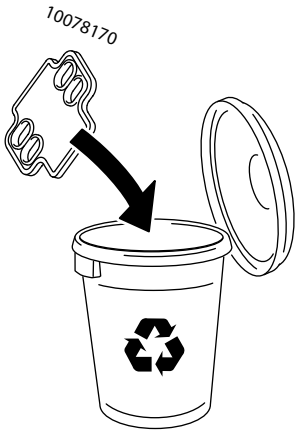

© Inter IKEA Systems B.V. 2020